KSZ8081MNX/RNB

10BASE-T/100BASE-TX Physical Layer Transceiver

Features

- Single-chip 10Base-T/100Base-TX IEEE 802.3 compliant Ethernet transceiver
- MII interface support (KSZ8081MNX)
- RMII v1.2 Interface support with a 50 MHz reference clock output to MAC, and an option to input a 50 MHz reference clock (KSZ8081RNB)
- Back-to-back mode support for a 100 Mbps copper repeater
- MDC/MDIO management interface for PHY register configuration
- Programmable interrupt output
- LED outputs for link, activity, and speed status indication
- On-chip termination resistors for the differential pairs
- Baseline wander correction
- HP Auto MDI/MDI-X to reliably detect and correct straight-through and crossover cable connections with disable and enable option
- Auto-negotiation to automatically select the highest link-up speed (10/100 Mbps) and duplex (half/full)
- Power-down and power-saving modes
- LinkMD TDR-based cable diagnostics to identify faulty copper cabling
- Parametric NAND Tree support for fault detection between chip I/Os and the board
- HBM ESD rating (6 kV)
- Loopback modes for diagnostics
- Single 3.3V power supply with VDD I/O options for 1.8V, 2.5V, or 3.3V
- Built-in 1.2V regulator for core
- Available in 32-pin (5 mm × 5 mm) QFN package

Applications

- Game console
- IP phone
- IP set-top box
- IP TV
- LOM
- Printer

© 2016-2017 Microchip Technology Inc.

Downloaded from Arrow.com.

TO OUR VALUED CUSTOMERS

It is our intention to provide our valued customers with the best documentation possible to ensure successful use of your Microchip products. To this end, we will continue to improve our publications to better suit your needs. Our publications will be refined and enhanced as new volumes and updates are introduced.

If you have any questions or comments regarding this publication, please contact the Marketing Communications Department via E-mail at **docerrors@microchip.com**. We welcome your feedback.

Most Current Data Sheet

To obtain the most up-to-date version of this data sheet, please register at our Worldwide Web site at:

http://www.microchip.com

You can determine the version of a data sheet by examining its literature number found on the bottom outside corner of any page. The last character of the literature number is the version number, (e.g., DS30000000A is version A of document DS30000000).

Errata

An errata sheet, describing minor operational differences from the data sheet and recommended workarounds, may exist for current devices. As device/documentation issues become known to us, we will publish an errata sheet. The errata will specify the revision of silicon and revision of document to which it applies.

To determine if an errata sheet exists for a particular device, please check with one of the following:

- Microchip's Worldwide Web site; http://www.microchip.com
- Your local Microchip sales office (see last page)

When contacting a sales office, please specify which device, revision of silicon and data sheet (include -literature number) you are using.

Customer Notification System

Register on our web site at **www.microchip.com** to receive the most current information on all of our products.

© 2016-2017 Microchip Technology Inc.

Downloaded from Arrow.com.

Table of Contents

1.0 Introduction 4
2.0 Pin Description and Configuration 5
Strap-In Options – KSZ8081MNX 9
Strap-in Options – KSZ8081RNB 14
3.0 Functional Description 15
4.0 Register Descriptions 35
5.0 Operational Characteristics 46
6.0 Electrical Characteristics 47
7.0 Timing Diagrams 49
8.0 Package Outline 61
Appendix A: Data Sheet Revision History 62
The Microchip Web Site 63
Customer Change Notification Service 63
Customer Support 63
Product Identification System 64

Downloaded from Arrow.com.

1.0 INTRODUCTION

1.1 General Description

The KSZ8081 is a single-supply 10BASE-T/100BASE-TX Ethernet physical-layer transceiver for transmission and reception of data over standard CAT-5 unshielded twisted pair (UTP) cable.

The KSZ8081 is a highly-integrated PHY solution. It reduces board cost and simplifies board layout by using on-chip termination resistors for the differential pairs and by integrating a low-noise regulator to supply the 1.2V core.

The KSZ8081MNX offers the Media Independent Interface (MII) and the KSZ8081RNB offers the Reduced Media Independent Interface (RMII) for direct connection with MII/RMII-compliant Ethernet MAC processors and switches.

A 25 MHz crystal is used to generate all required clocks, including the 50 MHz RMII reference clock output for the KSZ8081RNB.

The KSZ8081 provides diagnostic features to facilitate system bring-up and debugging in production testing and in product deployment. Parametric NAND tree support enables fault detection between KSZ8081 I/Os and the board. LinkMD® TDR-based cable diagnostics identify faulty copper cabling.

The KSZ8081MNX and KSZ8081RNB are available in 32-pin, lead-free QFN packages.

FIGURE 1-1: FUNCTIONAL BLOCK DIAGRAM

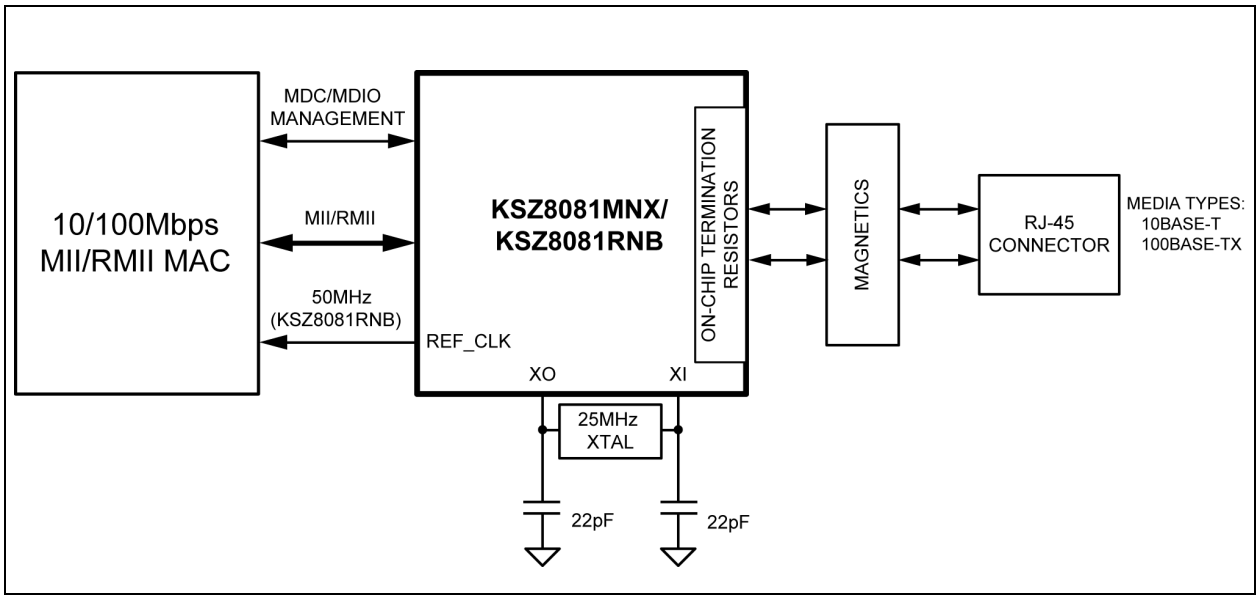

© 2016-2017 Microchip Technology Inc.

Downloaded from Arrow.com.

2.0 PIN DESCRIPTION AND CONFIGURATION

FIGURE 2-1: KSZ8081MNX 32-QFN PIN ASSIGNMENT (TOP VIEW)

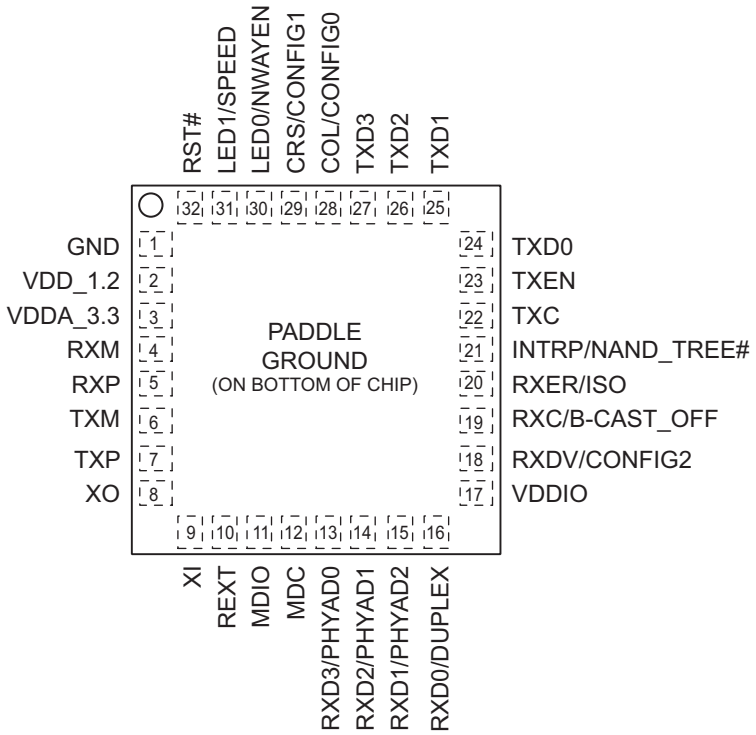

TABLE 2-1: PIN DESCRIPTION — KSZ8081MNX

Pin Number	Name	Buffer Type (Note 2-1)	Description
1	GND	GND	Ground
2	VDD_1.2	P	1.2V core V_{DD} (power supplied by KSZ8081MNX). Decouple with 2.2 µF and 0.1 µF capacitors to ground.
3	VDDA_3.3	P	3.3V analog V_{DD}.
4	RXM	I/O	Physical receive or transmit signal (– differential).
5	RXP	I/O	Physical receive or transmit signal (+ differential).
6	TXM	I/O	Physical transmit or receive signal (– differential).
7	TXP	I/O	Physical transmit or receive signal (+ differential).

Downloaded from Arrow.com.

TABLE 2-1: PIN DESCRIPTION — KSZ8081MNX (CONTINUED)

Pin Number	Name	Buffer Type (Note 2-1)	Description
8	XO	O	Crystal feedback for 25 MHz crystal. This pin is a no connect if an oscillator or external clock source is used.
9	XI	I	Crystal / Oscillator / External Clock Input. 25 MHz ±50 ppm.
10	REXT	I	Set PHY transmit output current. Connect a 6.49 kΩ resistor to ground on this pin.
11	MDIO	Ipu/Opu	Management Interface (MII) Data I/O This pin has a weak pull-up, is open-drain, and requires an external 1.0 kΩ pull-up resistor.
12	MDC	Ipu	Management Interface (MII) Clock Input. This clock pin is synchronous to the MDIO data pin.
13	PHYAD0	Ipu/O	MII Mode: MII Receive Data Output[3]. Config Mode: The pull-up/pull-down value is latched as PHYADDR[0] at the de-assertion of reset. See the Strap-In Options – KSZ8081MNX section for details.
14	PHYAD1	Ipd/O	MII Mode: MII Receive Data Output[2] (Note 2-2) Config Mode: The pull-up/pull-down value is latched as PHYADDR[1] at the de-assertion of reset. See the section Strap-In Options – KSZ8081MNX for details.
15	RXD1/ PHYAD2	Ipd/O	MII Mode: MII Receive Data Output[1] (Note 2-2). Config Mode: The pull-up/pull-down value is latched as PHYADDR[2] at the de-assertion of reset. See the section Strap-In Options – KSZ8081MNX for details.
16	RXD0/ DUPLEX	Ipu/O	MII Mode: MII Receive Data Output[0] (Note 2-2). Config Mode: The pull-up/pull-down value is latched as DUPLEX at the de-assertion of reset. See the section Strap-In Options – KSZ8081MNX for details.
17	VDDIO	P	3.3V, 2.5V, or 1.8V digital V_{DD}.
18	RXDV/ CONFIG2	Ipd/O	MII Mode: MII Receive Data Valid Output. Config Mode: The pull-up/pull-down value is latched as CONFIG2 at the de-assertion of reset. See the section Strap-In Options – KSZ8081MNX for details.
19	RXC/ B-CAST_OFF	Ipd/O	MII Mode: MII Receive Clock Output. Config Mode: The pull-up/pull-down value is latched as B-CAST_OFF at the de-assertion of reset. See the section Strap-In Options – KSZ8081MNX for details.
20	RXER/ ISO	Ipd/O	MII mode: MII Receive Error Output. Config Mode: The pull-up/pull-down value is latched as ISOLATE at the de-assertion of reset. See the section Strap-In Options – KSZ8081MNX for details.

© 2016-2017 Microchip Technology Inc.

Downloaded from Arrow.com.

TABLE 2-1: PIN DESCRIPTION — KSZ8081MNX (CONTINUED)

Pin Number	Name	Buffer Type (Note 2-1)	Description
21	INTRP/ NAND_Tree#	Ipu/Opu	Interrupt Output: Programmable Interrupt Output. This pin has a weak pull-up, is open-drain, and requires an external 1.0 kΩ pull-up resistor. Config Mode: The pull-up/pull-down value is latched as NAND Tree# at the de-assertion of reset. See the section Strap-In Options – KSZ8081MNX for details.
22	TXC	Ipd/O	MII Mode: MII Transmit Clock Output. At the de-assertion of reset, this pin needs to latch in a pull-down value for normal operation. If MAC side pulls this pin high, see Register 16h, Bit [15] for solution. It is better having an external pull-down resistor to avoid MAC side pulls this pin high.
23	TXEN	I	MII Mode: MII Transmit Enable input.
24	TXD0	I	MII Mode: MII Transmit Data Input[0] (Note 2-4).
25	TXD1	I	MII Mode: MII Transmit Data Input[1] (Note 2-4).
26	TXD2	I	MII Mode: MII Transmit Data Input[2] (Note 2-4).
27	TXD3	I	MII Mode: MII Transmit Data Input[3] (Note 2-4).
28	COL/ CONFIG0	Ipd/O	MII Mode: MII Collision Detect output. Config Mode: The pull-up/pull-down value is latched as CONFIG0 at the de-assertion of reset. See the section Strap-In Options – KSZ8081MNX for details.
29	CRS/ CONFIG1	Ipd/O	MII mode: MII Carrier Sense output Config mode: The pull-up/pull-down value is latched as CONFIG1 at the de-assertion of reset. See the section Strap-In Options – KSZ8081MNX for details.
30	LED0/ NWAYEN	Ipu/O	LED Output: Programmable LED0 Output. Config Mode: Latched as auto-negotiation enable (Register 0h, Bit [12]) at the de-assertion of reset. See the Strap-In Options – KSZ8081MNX section for details. The LED0 pin is programmable using Register 1Fh bits [5:4], and is defined as follows: **LED Mode = [00]** **Link/Activity** / **Pin State** / **LED Definition** No link / High / OFF Link / Low / ON Activity / Toggle / Blinking **LED Mode = [01]** **Link** / **Pin State** / **LED Definition** No link / High / OFF Link / Low / ON LED Mode = [10], [11] Reserved

Downloaded from Arrow.com.

TABLE 2-1: PIN DESCRIPTION — KSZ8081MNX (CONTINUED)

<table>
<tr><th>Pin Number</th><th>Name</th><th>Buffer Type (Note 2-1)</th><th>Description</th></tr>
<tr><td>31</td><td>LED1/ SPEED</td><td>Ipu/O</td><td>LED Output: Programmable LED1 Output.
Config Mode: Latched as Speed (Register 0h, Bit [13]) at the de-assertion of reset.
See the Strap-In Options – KSZ8081MNX section for details.
The LED1 pin is programmable using Register 1Fh bits [5:4], and is defined as follows:
:
<table>
<tr><th colspan="3">LED Mode = [00]</th></tr>
<tr><th>Speed</th><th>Pin State</th><th>LED Definition</th></tr>
<tr><td>10Base-T</td><td>High</td><td>OFF</td></tr>
<tr><td>100Base-TX</td><td>Low</td><td>ON</td></tr>
</table>
<table>
<tr><th colspan="3">LED Mode = [01]</th></tr>
<tr><th>Activity</th><th>Pin State</th><th>LED Definition</th></tr>
<tr><td>No activity</td><td>High</td><td>OFF</td></tr>
<tr><td>Activity</td><td>Toggle</td><td>Blinking</td></tr>
</table>
LED Mode = [10], [11]Reserved</td></tr>
<tr><td>32</td><td>RST#</td><td>Ipu</td><td>Chip Reset (active low).</td></tr>
<tr><td>PADDLE</td><td>GND</td><td>GND</td><td>Ground.</td></tr>
</table>

Note 2-1 P = Power supply.
GND = Ground.
I = Input.
O = Output.
I/O = Bi-directional.
Ipu = Input with internal pull-up (see Electrical Characteristics for value).
Ipu/O = Input with internal pull-up (see Electrical Characteristics for value) during power-up/reset; output pin otherwise.
Ipd/O = Input with internal pull-down (see Electrical Characteristics for value) during power-up/reset; output pin otherwise.
Ipu/Opu = Input with internal pull-up (see Electrical Characteristics for value) and output with internal pull-up (see Electrical Characteristics for value).
NC = Pin is not bonded to the die.

Note 2-2 RMII RX Mode: The RXD[1:0] bits are synchronous with the 50 MHz RMII Reference Clock. For each clock period in which CRS_DV is asserted, two bits of recovered data are sent by the PHY to the MAC.

Note 2-3 RMII TX Mode: The TXD[1:0] bits are synchronous with the 50 MHz RMII Reference Clock. For each clock period in which TXEN is asserted, two bits of data are received by the PHY from the MAC.

Note 2-4 MII TX Mode: The TXD[3:0] bits are synchronous with TXC. When TXEN is asserted, TXD[3:0] presents valid data from the MAC. TXD[3:0] has no effect on the PHY when TXEN is de-asserted.

© 2016-2017 Microchip Technology Inc.

Downloaded from Arrow.com.

STRAP-IN OPTIONS – KSZ8081MNX

The strap-in pins are latched at the de-assertion of reset. In some systems, the MAC RMII receive input pins may drive high/low during power-up or reset, and consequently cause the PHY strap-in pins on the RMII signals to be latched to unintended high/low states. In this case, external pull-ups (4.7 kΩ) or pull-downs (1.0 kΩ) should be added on these PHY strap-in pins to ensure that the intended values are strapped-in correctly.

TABLE 2-2: STRAP-IN OPTIONS – KSZ8081MNX

Pin Number	Pin Name	Type (Note 2-1)	Pin Function
15 14 13	PHYAD2 PHYAD1 PHYAD0	Ipd/O Ipd/O Ipu/O	PHYAD[2:0] is latched at de-assertion of reset and is configurable to any value from 0 to 7 with PHY Address 1 as the default value. PHY Address 0 is assigned by default as the broadcast PHY address, but it can be assigned as a unique PHY address after pulling the B-CAST_OFF strap-in pin high or writing a ‘1’ to Register 16h, Bit [9]. PHY Address bits [4:3] are set to 00 by default.
18 29 28	CONFIG2 CONFIG1 CONFIG0	Ipd/O Ipd/O Ipd/O	The CONFIG[2:0] strap-in pins are latched at the de-assertion of reset. **CONFIG [2:0]** — **Mode** 000 — MII 110 — MII back-to-back 001-100, 111 — Reserved - not used
20	ISO	Ipd/O	Isolate mode Pull-up = Enable Pull-down (default) = Disable At the de-assertion of reset, this pin value is latched into Register 0h, Bit [10].
31	SPEED	Ipu/O	Speed Mode: Pull-up (default) = 100 Mbps Pull-down = 10 Mbps At the de-assertion of reset, this pin value is latched into Register 0h, Bit [13] as the speed select, and also is latched into Register 4h (auto-negotiation advertisement) as the speed capability support.
16	DUPLEX	Ipu/O	Duplex Mode: Pull-up (default) = Half-duplex Pull-down = Full-duplex At the de-assertion of reset, this pin value is latched into Register 0h, Bit [8].
30	NWAYEN	Ipu/O	Nway auto-negotiation enable Pull-up (default) = Enable auto-negotiation Pull-down = Disable auto-negotiation At the de-assertion of reset, this pin value is latched into Register 0h, Bit [12].
19	B-CAST_OFF	Ipd/O	Broadcast off – for PHY Address 0 Pull-up = PHY Address 0 is set as an unique PHY address Pull-down (default) = PHY Address 0 is set as a broadcast PHY address At the de-assertion of reset, this pin value is latched by the chip.
21	NAND_Tree#	Ipu/ Opu	NAND tree mode Pull-up (default) = Disable Pull-down = Enable At the de-assertion of reset, this pin value is latched by the chip.

Note 2-1 Ipu/O = Input with internal pull-up (see Electrical Characteristics for value) during power-up/reset; output pin otherwise.
Ipd/O = Input with internal pull-down (see Electrical Characteristics for value) during power-up/reset; output pin otherwise.
Ipu/Opu = Input with internal pull-up (see Electrical Characteristics for value) and output with internal pull-up (see Electrical Characteristics for value).

Downloaded from Arrow.com.

FIGURE 2-2: KSZ8081RNB 32-QFN PIN ASSIGNMENT (TOP VIEW)

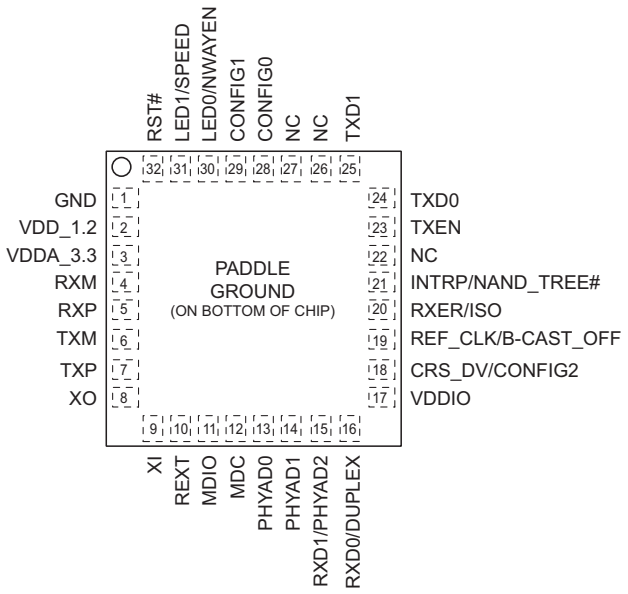

TABLE 2-3: PIN DESCRIPTION — KSZ8081RNB

Pin Number	Pin Name	Type (Note 2-1)	Pin Function
1	GND	GND	Ground
2	VDD_1.2	P	1.2V core V_{DD} (power supplied by KSZ8081RNB). Decouple with 2.2 µF and 0.1 µF capacitors to ground.
3	VDDA_3.3	P	3.3V analog V_{DD}.
4	RXM	I/O	Physical receive or transmit signal (– differential).
5	RXP	I/O	Physical receive or transmit signal (+ differential).
6	TXM	I/O	Physical transmit or receive signal (– differential).
7	TXP	I/O	Physical transmit or receive signal (+ differential).
8	XO	O	Crystal feedback for 25 MHz crystal. This pin is a no connect if an oscillator or external clock source is used.
9	XI	I	25 MHz Mode: 25 MHz ±50 ppm Crystal / Oscillator / External Clock Input 50 MHz Mode: 50 MHz ±50 ppm Oscillator / External Clock Input
10	REXT	I	Set PHY transmit output current. Connect a 6.49 kΩ resistor to ground on this pin.
11	MDIO	Ipu/Opu	Management Interface (MII) Data I/O. This pin has a weak pull-up, is open-drain, and requires an external 1.0 kΩ pull-up resistor.
12	MDC	Ipu	Management Interface (MII) Clock Input. This clock pin is synchronous to the MDIO data pin.
13	PHYAD0	Ipu/O	The pull-up/pull-down value is latched as PHYADDR[0] at the de-assertion of reset. See the Strap-in Options – KSZ8081RNB section for details.

© 2016-2017 Microchip Technology Inc.

Downloaded from Arrow.com.

TABLE 2-3: PIN DESCRIPTION — KSZ8081RNB (CONTINUED)

Pin Number	Pin Name	Type (Note 2-1)	Pin Function
14	PHYAD1	Ipd/O	The pull-up/pull-down value is latched as PHYADDR[1] at the de-assertion of reset. See the Strap-in Options – KSZ8081RNB section for details.
15	RXD1/ PHYAD2	Ipd/O	RMII Mode: RMII Receive Data Output[1] (Note 2-2). Config Mode: The pull-up/pull-down value is latched as PHYADDR[2] at the de-assertion of reset. See the Strap-in Options – KSZ8081RNB section for details.
16	RXD0/ DUPLEX	Ipu/O	RMII Mode: RMII Receive Data Output[0] (Note 2-2). Config Mode: The pull-up/pull-down value is latched as DUPLEX at the de-assertion of reset. See the Strap-in Options – KSZ8081RNB section for details.
17	VDDIO	P	3.3V, 2.5V, or 1.8V digital V_{DD}.
18	CRS_DV/ CONFIG2	Ipd/O	RMII Mode: RMII Carrier Sense/Receive Data Valid Output. Config Mode: The pull-up/pull-down value is latched as CONFIG2 at the de-assertion of reset. See the Strap-in Options – KSZ8081RNB section for details.
19	REF_CLK/ B-CAST_OFF	Ipd/O	RMII Mode: 25 MHz Mode: This pin provides the 50 MHz RMII reference clock output to the MAC. See also XI (Pin 9). 50 MHz mode: This pin is a no connect. See also XI (Pin 9). Config Mode: The pull-up/pull-down value is latched as B-CAST_OFF at the de-assertion of reset. See the Strap-in Options – KSZ8081RNB section for details.
20	RXER/ ISO	Ipd/O	RMII Mode: RMII Receive Error Output. Config Mode: The pull-up/pull-down value is latched as ISOLATE at the de-assertion of reset. See the Strap-in Options – KSZ8081RNB section for details.
21	INTRP/ NAND_Tree#	Ipu/Opu	Interrupt Output: Programmable Interrupt Output. This pin has a weak pull-up, is open-drain, and requires an external 1.0 kΩ pull-up resistor. Config Mode: The pull-up/pull-down value is latched as NAND Tree# at the de-assertion of reset. See the Strap-in Options – KSZ8081RNB section for details.
22	NC	—	No Connect. This pin is not bonded and can be left floating.
23	TXEN	I	RMII Transmit Enable input.
24	TXD0	I	RMII Transmit Data Input[0] (Note 2-3).
25	TXD1	I	RMII Transmit Data Input[1] (Note 2-3).
26	NC	—	No Connect. This pin is not bonded and can be left floating.
27	NC	—	No Connect. This pin is not bonded and can be left floating.

Downloaded from Arrow.com.

TABLE 2-3: PIN DESCRIPTION — KSZ8081RNB (CONTINUED)

<table>
<tr><th>Pin Number</th><th>Pin Name</th><th>Type (Note 2-1)</th><th>Pin Function</th></tr>
<tr><td>28</td><td>CONFIG0</td><td>Ipd/O</td><td>The pull-up/pull-down value is latched as CONFIG0 at the de-assertion of reset. See the Strap-in Options – KSZ8081RNB section for details.</td></tr>
<tr><td>29</td><td>CONFIG1</td><td>Ipd/O</td><td>The pull-up/pull-down value is latched as CONFIG1 at the de-assertion of reset. See the Strap-in Options – KSZ8081RNB section for details.</td></tr>
<tr><td>30</td><td>LED0/
NWAYEN</td><td>Ipu/O</td><td>LED Output: Programmable LED0 Output.
Config Mode: Latched as auto-negotiation enable (Register 0h, Bit [12]) at the de-assertion of reset.
See the Strap-in Options – KSZ8081RNB section for details.
The LED0 pin is programmable using Register 1Fh bits [5:4], and is defined as follows:
<table>
<tr><th colspan="3">LED Mode = [00]</th></tr>
<tr><th>Link/Activity</th><th>Pin State</th><th>LED Definition</th></tr>
<tr><td>No link</td><td>High</td><td>OFF</td></tr>
<tr><td>Link</td><td>Low</td><td>ON</td></tr>
<tr><td>Activity</td><td>Toggle</td><td>Blinking</td></tr>
</table>
<table>
<tr><th colspan="3">LED Mode = [01]</th></tr>
<tr><th>Link</th><th>Pin State</th><th>LED Definition</th></tr>
<tr><td>No link</td><td>High</td><td>OFF</td></tr>
<tr><td>Link</td><td>Low</td><td>ON</td></tr>
</table>
LED Mode = [10], [11] Reserved</td></tr>
<tr><td>31</td><td>LED1/ SPEED</td><td>Ipu/O</td><td>LED Output: Programmable LED1 Output.
Config Mode: Latched as Speed (Register 0h, Bit [13]) at the de-assertion of reset.
See the Strap-in Options – KSZ8081RNB section for details.
The LED1 pin is programmable using Register 1Fh bits [5:4], and is defined as follows:
<table>
<tr><th colspan="3">LED Mode = [00]</th></tr>
<tr><th>Speed</th><th>Pin State</th><th>LED Definition</th></tr>
<tr><td>10Base-T</td><td>High</td><td>OFF</td></tr>
<tr><td>100Base-TX</td><td>Low</td><td>ON</td></tr>
</table>
<table>
<tr><th colspan="3">LED Mode = [01]</th></tr>
<tr><th>Activity</th><th>Pin State</th><th>LED Definition</th></tr>
<tr><td>No activity</td><td>High</td><td>OFF</td></tr>
<tr><td>Activity</td><td>Toggle</td><td>Blinking</td></tr>
</table>
LED Mode = [10], [11] Reserved</td></tr>
<tr><td>32</td><td>RST#</td><td>Ipu</td><td>Chip Reset (active low).</td></tr>
<tr><td>PADDLE</td><td>GND</td><td>GND</td><td>Ground.</td></tr>
</table>

Note 2-1 P = Power supply. GND = Ground. I = Input. O = Output. I/O = Bi-directional. Ipu = Input with internal pull-up (see Electrical Characteristics for value). Ipu/O = Input with internal pull-up (see Electrical Characteristics for value) during power-up/reset; output pin otherwise. Ipd/O = Input with internal pull-down (see Electrical Characteristics for value) during power-up/reset; output pin otherwise. Ipu/Opu

© 2016-2017 Microchip Technology Inc.

Downloaded from Arrow.com.

= Input with internal pull-up (see Electrical Characteristics for value) and output with internal pull-up (see Electrical Characteristics for value). NC = Pin is not bonded to the die.

Note 2-2 RMII RX Mode: The RXD[1:0] bits are synchronous with the 50 MHz RMII Reference Clock. For each clock period in which CRS_DV is asserted, two bits of recovered data are sent by the PHY to the MAC.

Note 2-3 RMII TX Mode: The TXD[1:0] bits are synchronous with the 50MHz RMII Reference Clock. For each clock period in which TXEN is asserted, two bits of data are received by the PHY from the MAC.

Downloaded from Arrow.com.

STRAP-IN OPTIONS – KSZ8081RNB

The strap-in pins are latched at the de-assertion of reset. In some systems, the MAC RMII receive input pins may drive high/low during power-up or reset, and consequently cause the PHY strap-in pins on the RMII signals to be latched to unintended high/low states. In this case, external pull-ups (4.7 kΩ) or pull-downs (1.0 kΩ) should be added on these PHY strap-in pins to ensure that the intended values are strapped-in correctly.

TABLE 2-4: STRAP-IN OPTIONS

Pin Number	Pin Name	Type (Note 2-1)	Pin Function
15 14 13	PHYAD2 PHYAD1 PHYAD0	Ipd/O Ipd/O Ipu/O	PHYAD[2:0] is latched at de-assertion of reset and is configurable to any value from 0 to 7 with PHY Address 1 as the default value. PHY Address 0 is assigned by default as the broadcast PHY address, but it can be assigned as a unique PHY address after pulling the B-CAST_OFF strapping pin high or writing a ‘1’ to Register 16h, Bit [9]. PHY Address bits [4:3] are set to 00 by default.
18 29 28	CONFIG2 CONFIG1 CONFIG0	Ipd/O Ipd/O Ipd/O	The CONFIG[2:0] strap-in pins are latched at the de-assertion of reset. **CONFIG[2:0]** — **Mode** 001 — RMII 101 — RMII back-to-back 000, 010 – 100, 110, 111 — Reserved – not used
20	ISO	Ipd/O	Isolate mode Pull-up = Enable Pull-down (default) = Disable At the de-assertion of reset, this pin value is latched into Register 0h, Bit [10].
31	SPEED	Ipu/O	Speed mode Pull-up (default) = 100 Mbps Pull-down = 10 Mbps At the de-assertion of reset, this pin value is latched into Register 0h, Bit [13] as the speed select, and also is latched into Register 4h (auto-negotiation advertisement) as the speed capability support.
16	DUPLEX	Ipu/O	Duplex mode Pull-up (default) = Half-duplex Pull-down = Full-duplex At the de-assertion of reset, this pin value is latched into Register 0h, Bit [8].
30	NWAYEN	Ipu/O	Nway auto-negotiation enable Pull-up (default) = Enable auto-negotiation Pull-down = Disable auto-negotiation At the de-assertion of reset, this pin value is latched into Register 0h, Bit [12].
19	B-CAST_OFF	Ipd/O	Broadcast off – for PHY Address 0 Pull-up = PHY Address 0 is set as an unique PHY address Pull-down (default) = PHY Address 0 is set as a broadcast PHY address At the de-assertion of reset, this pin value is latched by the chip.
21	NAND_Tree#	Ipu/ Opu	NAND tree mode Pull-up (default) = Disable Pull-down = Enable At the de-assertion of reset, this pin value is latched by the chip.

Note 2-1 Ipu/O = Input with internal pull-up (see Electrical Characteristics for value) during power-up/reset; output pin otherwise.
Ipd/O = Input with internal pull-down (see Electrical Characteristics for value) during power-up/reset; output pin otherwise.
Ipu/Opu = Input with internal pull-up (see Electrical Characteristics for value) and output with internal pull-up (see Electrical Characteristics for value).

© 2016-2017 Microchip Technology Inc.

Downloaded from Arrow.com.

3.0 FUNCTIONAL DESCRIPTION

3.1 10BASE-T/100BASE-TX Transceiver

The KSZ8081 is an integrated single 3.3V supply Fast Ethernet transceiver. It is fully compliant with the IEEE 802.3 Specification, and reduces board cost and simplifies board layout by using on-chip termination resistors for the two differential pairs and by integrating the regulator to supply the 1.2V core.

On the copper media side, the KSZ8081 supports 10BASE-T and 100BASE-TX for transmission and reception of data over a standard CAT-5 unshielded twisted pair (UTP) cable, and HP Auto MDI/MDI–X for reliable detection of and correction for straight-through and crossover cables.

On the MAC processor side, the KSZ8081MNX offers the Media Independent Interface (MII) and the KSZ8081RNB offers the Reduced Media Independent Interface (RMII) for direct connection with MII and RMII compliant Ethernet MAC processors and switches, respectively.

The MII management bus option gives the MAC processor complete access to the KSZ8081 control and status registers. Additionally, an interrupt pin eliminates the need for the processor to poll for PHY status change.

The KSZ8081MNX/RNB is used to refer to both KSZ8081MNX and KSZ8081RNB versions in this datasheet.

3.1.1 100BASE-TX TRANSMIT

The 100BASE-TX transmit function performs parallel-to-serial conversion, 4B/5B encoding, scrambling, NRZ-to-NRZI conversion, and MLT3 encoding and transmission.

The circuitry starts with a parallel-to-serial conversion, which converts the MII data from the MAC into a 125 MHz serial bit stream. The data and control stream is then converted into 4B/5B coding and followed by a scrambler. The serialized data is further converted from NRZ-to-NRZI format, and then transmitted in MLT3 current output. The output current is set by an external 6.49 kΩ 1% resistor for the 1:1 transformer ratio.

The output signal has a typical rise/fall time of 4 ns and complies with the ANSI TP-PMD standard regarding amplitude balance, overshoot, and timing jitter. The wave-shaped 10BASE-T output is also incorporated into the 100BASE-TX transmitter.

3.1.2 100BASE-TX RECEIVE

The 100BASE-TX receiver function performs adaptive equalization, DC restoration, MLT3-to-NRZI conversion, data and clock recovery, NRZI-to-NRZ conversion, de-scrambling, 4B/5B decoding, and serial-to-parallel conversion.

The receiving side starts with the equalization filter to compensate for inter-symbol interference (ISI) over the twisted pair cable. Because the amplitude loss and phase distortion is a function of the cable length, the equalizer must adjust its characteristics to optimize performance. In this design, the variable equalizer makes an initial estimation based on comparisons of incoming signal strength against some known cable characteristics, then tunes itself for optimization. This is an ongoing process and self-adjusts against environmental changes such as temperature variations.

Next, the equalized signal goes through a DC-restoration and data-conversion block. The DC-restoration circuit compensates for the effect of baseline wander and improves the dynamic range. The differential data-conversion circuit converts MLT3 format back to NRZI. The slicing threshold is also adaptive.

The clock-recovery circuit extracts the 125 MHz clock from the edges of the NRZI signal. This recovered clock is then used to convert the NRZI signal to NRZ format. This signal is sent through the de-scrambler, then the 4B/5B decoder. Finally, the NRZ serial data is converted to MII format and provided as the input data to the MAC.

3.1.3 SCRAMBLER/DE-SCRAMBLER (100BASE-TX ONLY)

The scrambler spreads the power spectrum of the transmitted signal to reduce electromagnetic interference (EMI) and baseline wander. The de-scrambler recovers the scrambled signal.

3.1.4 10BASE-T TRANSMIT

The 10BASE-T drivers are incorporated with the 100BASE-TX drivers to allow for transmission using the same magnetic. The drivers perform internal wave shaping and pre-emphasis, and output 10BASE-T signals with a typical amplitude of 2.5V peak. The 10BASE-T signals have harmonic contents that are at least 27 dB below the fundamental frequency when driven by an all-ones Manchester-encoded signal.

Downloaded from Arrow.com.

3.1.5 10BASE-T RECEIVE

On the receive side, input buffer and level detecting squelch circuits are used. A differential input receiver circuit and a phase-locked loop (PLL) performs the decoding function. The Manchester-encoded data stream is separated into clock signal and NRZ data. A squelch circuit rejects signals with levels less than 400 mV, or with short pulse widths, to prevent noise at the RXP and RXM inputs from falsely triggering the decoder. When the input exceeds the squelch limit, the PLL locks onto the incoming signal and the KSZ8081MNX/RNB decodes a data frame. The receive clock is kept active during idle periods between data receptions.

3.1.6 SQE AND JABBER FUNCTION (10BASE-T ONLY)

In 10BASE-T operation, a short pulse is put out on the COL pin after each frame is transmitted. This SQE test is needed to test the 10BASE-T transmit/receive path. If transmit enable (TXEN) is high for more than 20 ms (jabbering), the 10BASE-T transmitter is disabled and COL is asserted high. If TXEN is then driven low for more than 250 ms, the 10BASE-T transmitter is re-enabled and COL is de-asserted (returns to low).

3.1.7 PLL CLOCK SYNTHESIZER

The KSZ8081MNX/RNB generates all internal clocks and all external clocks for system timing from an external 25 MHz crystal, oscillator, or reference clock. For the KSZ8081RNB in RMII 50 MHz clock mode, these clocks are generated from an external 50 MHz oscillator or system clock.

3.1.8 AUTO-NEGOTIATION

The KSZ8081MNX/RNB conforms to the auto-negotiation protocol, defined in Clause 28 of the IEEE 802.3 Specification.

Auto-negotiation allows unshielded twisted pair (UTP) link partners to select the highest common mode of operation.

During auto-negotiation, link partners advertise capabilities across the UTP link to each other and then compare their own capabilities with those they received from their link partners. The highest speed and duplex setting that is common to the two link partners is selected as the mode of operation.

The following list shows the speed and duplex operation mode from highest to lowest priority.

- Priority 1: 100BASE-TX, full–duplex
- Priority 2: 100BASE-TX, half–duplex
- Priority 3: 10BASE-T, full–duplex
- Priority 4: 10BASE-T, half–duplex

If auto-negotiation is not supported or the KSZ8081MNX/RNB link partner is forced to bypass auto-negotiation, then the KSZ8081MNX/RNB sets its operating mode by observing the signal at its receiver. This is known as parallel detection, which allows the KSZ8081MNX/RNB to establish a link by listening for a fixed signal protocol in the absence of the auto-negotiation advertisement protocol.

Auto-negotiation is enabled by either hardware pin strapping (NWAYEN, Pin 42) or software (Register 0h, Bit [12]).

By default, auto-negotiation is enabled after power-up or hardware reset. After that, auto-negotiation can be enabled or disabled by Register 0h, Bit [12]. If auto-negotiation is disabled, the speed is set by Register 0h, Bit [13], and the duplex is set by Register 0h, Bit [8].

The auto-negotiation link-up process is shown in Figure 3-1.

© 2016-2017 Microchip Technology Inc.

Downloaded from Arrow.com.

FIGURE 3-1: AUTO-NEGOTIATION FLOW CHART

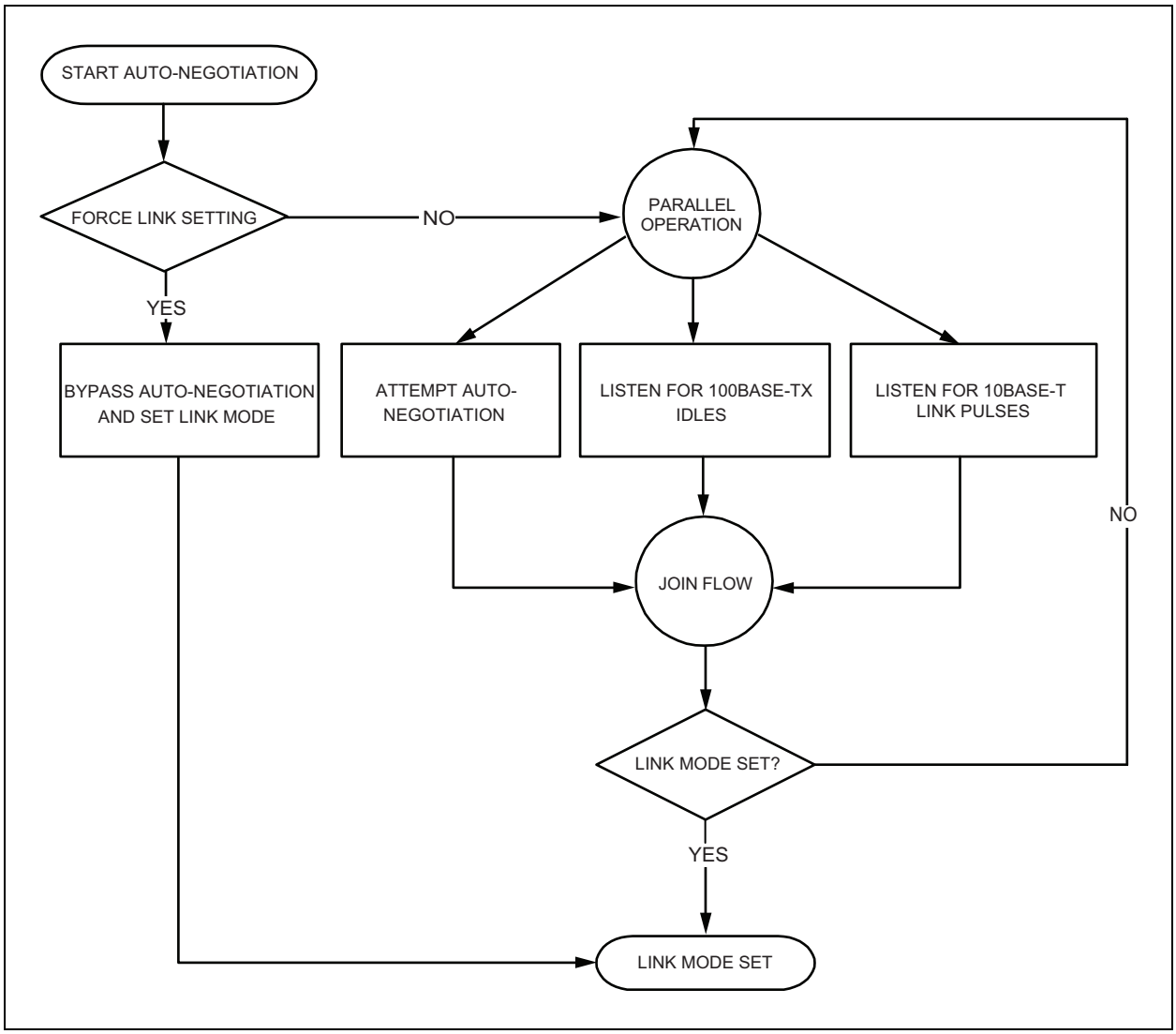

3.2 MII Interface (KSZ8081MNX Only)

The Media Independent Interface (MII) is compliant with the IEEE 802.3 Specification. It provides a common interface between MII PHYs and MACs, and has the following key characteristics:

- Pin count is 15 pins (6 pins for data transmission, 7 pins for data reception, and 2 pins for carrier and collision indication).
- 10 Mbps and 100 Mbps data rates are supported at both half- and full-duplex.
- Data transmission and reception are independent and belong to separate signal groups.
- Transmit data and receive data are each 4 bits wide, a nibble.

By default, the KSZ8081MNX is configured to MII mode after it is powered up or hardware reset with the following:

A 25 MHz crystal connected to XI, XO (pins 9, 8), or an external 25 MHz clock source (oscillator) connected to XI.

The CONFIG[2:0] strapping pins (pins 18, 29, 28) set to 000 (default setting).

Downloaded from Arrow.com.

3.2.1 MII SIGNAL DEFINITION

Table 3-1 describes the MII signals. Refer to Clause 22 of the IEEE 802.3 Specification for detailed information.

TABLE 3-1: MII SIGNAL DEFINITION

MII Signal Name	Direction (with respect to PHY, KSZ8081MNX signal)	Direction (with respect to MAC)	Description
TXC	Output	Input	Transmit Clock (2.5 MHz for 10 Mbps; 25 MHz for 100 Mbps)
TXEN	Input	Output	Transmit Enable
TXD[3:0]	Input	Output	Transmit Data[3:0]
RXC	Output	Input	Receive Clock (2.5 MHz for 10 Mbps; 25 MHz for 100 Mbps)
RXDV	Output	Input	Receive Data Valid
RXD[3:0]	Output	Input	Receive Data[3:0]
RXER	Output	Input, or (not required)	Receive Error
CRS	Output	Input	Carrier Sense
COL	Output	Input	Collision Detection

3.2.2 TRANSMIT CLOCK (TXC)

TXC is sourced by the PHY. It is a continuous clock that provides the timing reference for TXEN and TXD[3:0]. TXC is 2.5 MHz for 10 Mbps operation and 25 MHz for 100 Mbps operation.

3.2.3 TRANSMIT ENABLE (TXEN)

TXEN indicates that the MAC is presenting nibbles on TXD[3:0] for transmission. It is asserted synchronously with the first nibble of the preamble and remains asserted while all nibbles to be transmitted are presented on the MII. It is negated before the first TXC following the final nibble of a frame.

TXEN transitions synchronously with respect to TXC.

3.2.4 TRANSMIT DATA[3:0] (TXD[3:0])

TXD[3:0] transitions synchronously with respect to TXC. When TXEN is asserted, TXD[3:0] are accepted by the PHY for transmission. TXD[3:0] is 00 to indicate idle when TXEN is de-asserted. Values other than 00 on TXD[3:0] while TXEN is de-asserted are ignored by the PHY.

3.2.5 RECEIVE CLOCK (RXC)

RXC provides the timing reference for RXDV, RXD[3:0], and RXER.

- In 10 Mbps mode, RXC is recovered from the line while the carrier is active. RXC is derived from the PHY's reference clock when the line is idle or the link is down.
- In 100 Mbps mode, RXC is continuously recovered from the line. If the link is down, RXC is derived from the PHY's reference clock.

RXC is 2.5 MHz for 10 Mbps operation and 25 MHz for 100 Mbps operation.

3.2.6 RECEIVE DATA VALID (RXDV)

RXDV is driven by the PHY to indicate that the PHY is presenting recovered and decoded nibbles on RXD[3:0].

- In 10 Mbps mode, RXDV is asserted with the first nibble of the start-of-frame delimiter (SFD), 5D, and remains asserted until the end of the frame.
- In 100 Mbps mode, RXDV is asserted from the first nibble of the preamble to the last nibble of the frame.

RXDV transitions synchronously with respect to RXC.

© 2016-2017 Microchip Technology Inc.

Downloaded from Arrow.com.

3.2.7 RECEIVE DATA[3:0] (RXD[3:0])

RXD[3:0] transitions synchronously with respect to RXC. For each clock period in which RXDV is asserted, RXD[3:0] transfers a nibble of recovered data from the PHY.

3.2.8 RECEIVE ERROR (RXER)

RXER is asserted for one or more RXC periods to indicate that a symbol error (for example, a coding error that a PHY can detect that may otherwise be undetectable by the MAC sub-layer) was detected somewhere in the frame being transferred from the PHY.

RXER transitions synchronously with respect to RXC. While RXDV is de-asserted, RXER has no effect on the MAC.

3.2.9 CARRIER SENSE (CRS)

CRS is asserted and de-asserted as follows:

- In 10 Mbps mode, CRS assertion is based on the reception of valid preambles. CRS de-assertion is based on the reception of an end-of-frame (EOF) marker.
- In 100 Mbps mode, CRS is asserted when a start-of-stream delimiter or /J/K symbol pair is detected. CRS is de-asserted when an end-of-stream delimiter or /T/R symbol pair is detected. Additionally, the PMA layer de-asserts CRS if IDLE symbols are received without /T/R.

3.2.10 COLLISION (COL)

COL is asserted in half-duplex mode whenever the transmitter and receiver are simultaneously active on the line. This informs the MAC that a collision has occurred during its transmission to the PHY. COL transitions asynchronously with respect to TXC and RXC.

3.2.11 MII SIGNAL DIAGRAM

The KSZ8081MNX MII pin connections to the MAC are shown in Figure 3-2.

FIGURE 3-2: KSZ8081MNX MII INTERFACE

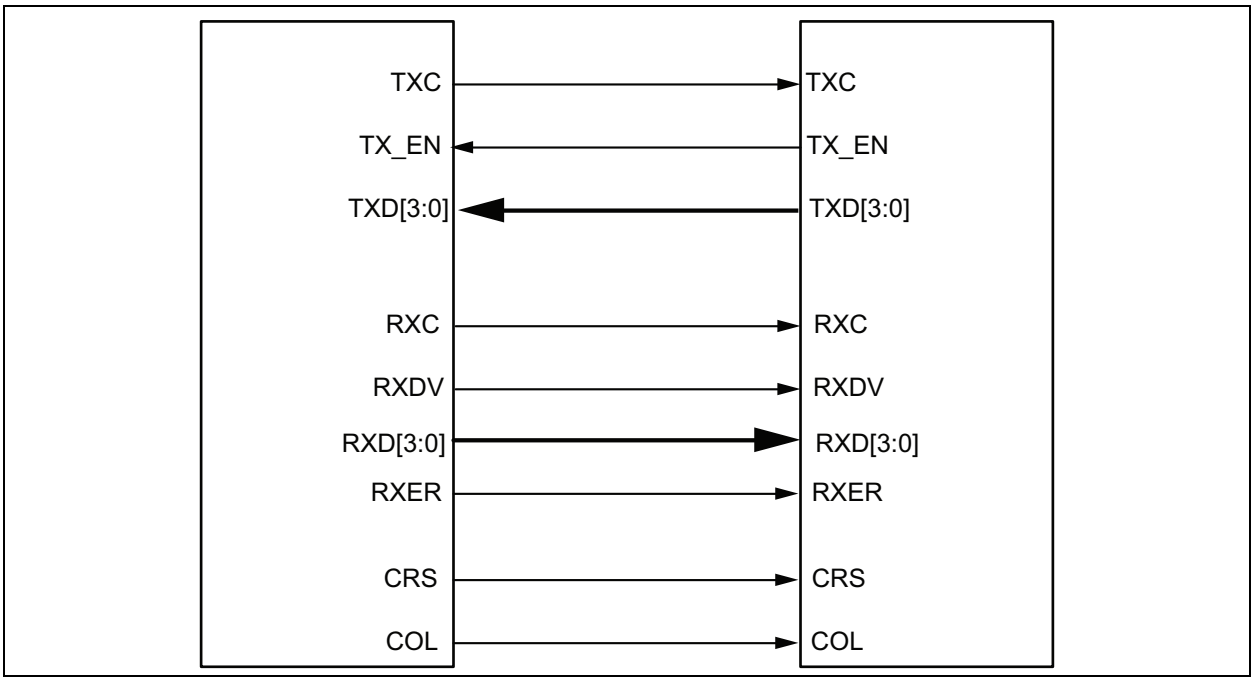

Downloaded from Arrow.com.

3.3 RMII Data Interface (KSZ8081RNB Only)

The Reduced Media Independent Interface (RMII) specifies a low pin count Media Independent Interface (MII). It provides a common interface between physical layer and MAC layer devices, and has the following key characteristics:

- Pin count is 8 pins (3 pins for data transmission, 4 pins for data reception, and 1 pin for the 50 MHz reference clock).
- 10 Mbps and 100 Mbps data rates are supported at both half- and full-duplex.
- Data transmission and reception are independent and belong to separate signal groups.
- Transmit data and receive data are each 2 bits wide, a dibit.

3.3.1 RMII – 25 MHZ CLOCK MODE

The KSZ8081RNB is configured to RMII – 25 MHz clock mode after it is powered up or hardware reset with the following:

- A 25 MHz crystal connected to XI, XO (pins 9, 8), or an external 25 MHz clock source (oscillator) connected to XI.
- The CONFIG[2:0] strapping pins (pins 18, 29, 28) set to 001.
- Register 1Fh, Bit [7] is set to 0 (default value) to select 25 MHz clock mode.

3.3.2 RMII – 50 MHZ CLOCK MODE

The KSZ8081RNB is configured to RMII – 50 MHz clock mode after it is powered up or hardware reset with the following:

- An external 50 MHz clock source (oscillator) connected to XI (Pin 9).
- The CONFIG[2:0] strapping pins (pins 18, 29, 28) set to 001.
- Register 1Fh, Bit [7] is set to 1 to select 50 MHz clock mode.

3.3.3 RMII SIGNAL DEFINITION

Table 3-2 describes the RMII signals. Refer to RMII Specification v1.2 for detailed information.

TABLE 3-2: RMII SIGNAL DEFINITION

MII Signal Name	Direction (with respect to PHY, KSZ8081MNX signal)	Direction (with respect to MAC)	Description
TXC	Output	Input	Transmit Clock (2.5 MHz for 10 Mbps; 25 MHz for 100 Mbps)
TXEN	Input	Output	Transmit Enable
TXD[3:0]	Input	Output	Transmit Data[3:0]
RXC	Output	Input	Receive Clock (2.5 MHz for 10 Mbps; 25 MHz for 100 Mbps)
RXDV	Output	Input	Receive Data Valid
RXD[3:0]	Output	Input	Receive Data[3:0]

3.3.4 REFERENCE CLOCK (REF_CLK)

REF_CLK is a continuous 50 MHz clock that provides the timing reference for TXEN, TXD[1:0], CRS_DV, RXD[1:0], and RX_ER.

For 25 MHz clock mode, the KSZ8081RNB generates and outputs the 50 MHz RMII REF_CLK to the MAC at REF_CLK (Pin 19).

For 50 MHz clock mode, the KSZ8081RNB takes in the 50 MHz RMII REF_CLK from the MAC or system board at XI (Pin 9) and leaves the REF_CLK (Pin 19) as a no connect.

© 2016-2017 Microchip Technology Inc.

Downloaded from Arrow.com.

3.3.5 TRANSMIT ENABLE (TXEN)

TXEN indicates that the MAC is presenting dibits on TXD[1:0] for transmission. It is asserted synchronously with the first dibit of the preamble and remains asserted while all dibits to be transmitted are presented on the RMII. It is negated before the first REF_CLK following the final dibit of a frame.

TXEN transitions synchronously with respect to REF_CLK.

3.3.6 TRANSMIT DATA[1:0] (TXD[1:0])

TXD[1:0] transitions synchronously with respect to REF_CLK. When TXEN is asserted, the PHY accepts TXD[1:0] for transmission.

TXD[1:0] is 00 to indicate idle when TXEN is de-asserted. The PHY ignores values other than 00 on TXD[1:0] while TXEN is de-asserted.

3.3.7 CARRIER SENSE/RECEIVE DATA VALID (CRS_DV)

The PHY asserts CRS_DV when the receive medium is non-idle. It is asserted asynchronously when a carrier is detected. This happens when squelch is passed in 10 Mbps mode, and when two non-contiguous 0s in 10 bits are detected in 100 Mbps mode. Loss of carrier results in the de-assertion of CRS_DV.

While carrier detection criteria are met, CRS_DV remains asserted continuously from the first recovered dibit of the frame through the final recovered dibit. It is negated before the first REF_CLK that follows the final dibit. The data on RXD[1:0] is considered valid after CRS_DV is asserted. However, because the assertion of CRS_DV is asynchronous relative to REF_CLK, the data on RXD[1:0] is 00 until receive signals are properly decoded.

3.3.8 RECEIVE DATA[1:0] (RXD[1:0])

RXD[1:0] transitions synchronously with respect to REF_CLK. For each clock period in which CRS_DV is asserted, RXD[1:0] transfers two bits of recovered data from the PHY.

RXD[1:0] is 00 to indicate idle when CRS_DV is de-asserted. The MAC ignores values other than 00 on RXD[1:0] while CRS_DV is de-asserted.

3.3.9 RECEIVE ERROR (RXER)

RXER is asserted for one or more REF_CLK periods to indicate that a symbol error (for example, a coding error that a PHY can detect that may otherwise be undetectable by the MAC sub-layer) was detected somewhere in the frame being transferred from the PHY.

RXER transitions synchronously with respect to REF_CLK. . While CRS_DV is de-asserted, RXER has no effect on the MAC.

3.3.10 COLLISION DETECTION (COL)

The MAC regenerates the COL signal of the MII from TXEN and CRS_DV.

3.3.11 RMII SIGNAL DIAGRAM

The KSZ8081RNB RMII pin connections to the MAC for 25 MHz clock mode are shown in Figure 3-3. The connections for 50 MHz clock mode are shown in Figure 3-4.

Downloaded from Arrow.com.

FIGURE 3-3: KSZ8081RNB RMII INTERFACE (25 MHZ CLOCK MODE)

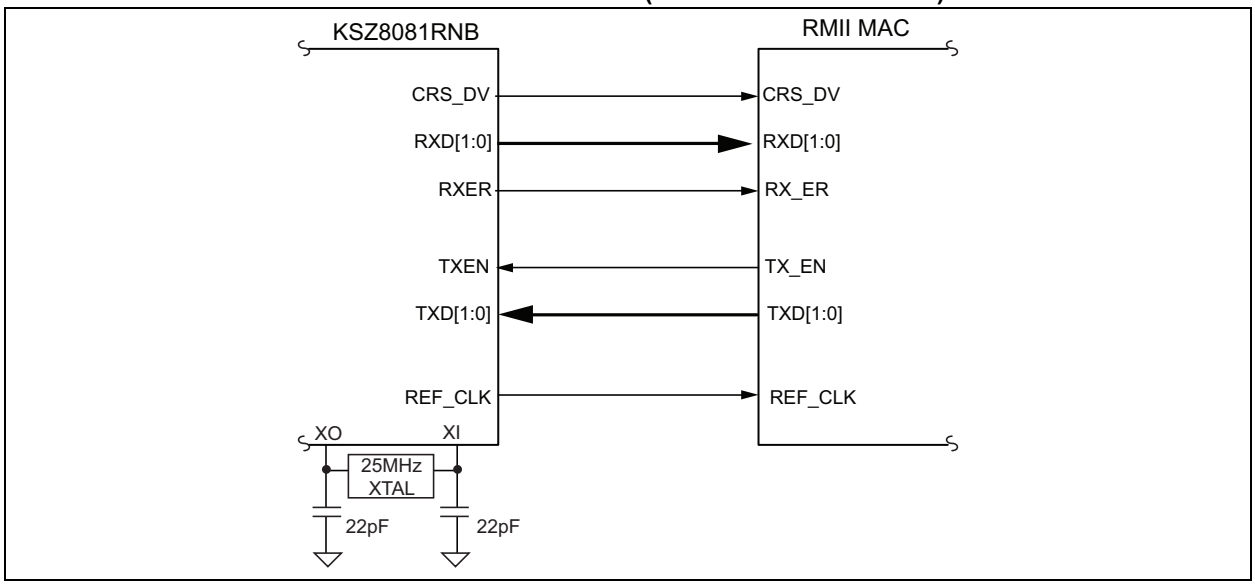

FIGURE 3-4: KSZ8081RNB RMII INTERFACE (50 MHZ CLOCK MODE)

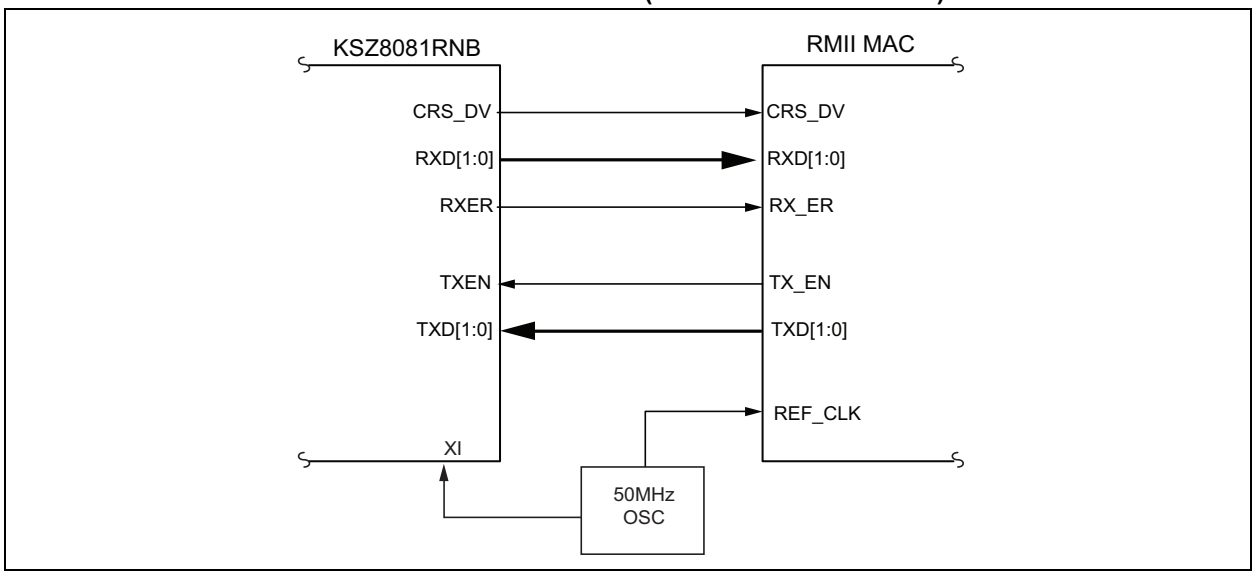

© 2016-2017 Microchip Technology Inc.

Downloaded from Arrow.com.

3.4 Back-to-Back Mode – 100 Mbps Copper Repeater

Two KSZ8081MNX/RNB devices can be connected back-to-back to form a 100BASE-TX copper repeater.

FIGURE 3-5: KSZ8081MNX/RNB TO KSZ8081MNX/RNB BACK-TO-BACK COPPER REPEATER

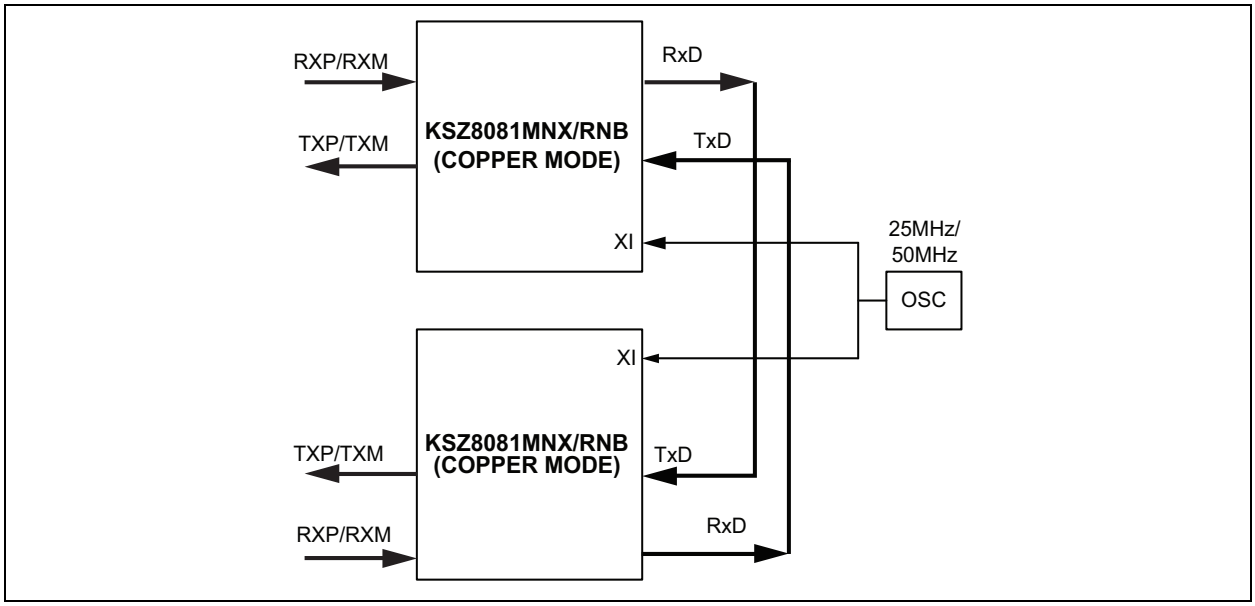

3.4.1 MII BACK-TO-BACK MODE (KSZ8081MNX ONLY)

In MII back-to-back mode, a KSZ8081MNX interfaces with another KSZ8081MNX to provide a complete 100 Mbps copper repeater solution.

The KSZ8081MNX devices are configured to MII back-to-back mode after power-up or reset with the following:

- Strapping pin CONFIG[2:0] (Pins 18, 29, 28) set to 110
- A common 25 MHz reference clock connected to XI (Pin 9) of both KSZ8081MNX devices
- MII signals connected as shown in Table 3-3.

TABLE 3-3: MII SIGNAL CONNECTION FOR MII BACK-TO-BACK MODE (100BASE-TX COPPER REPEATER)

KSZ8081MNX (100BASE-TX copper) [Device 1]			KSZ8081MNX (100BASE-TX copper) [Device 2]		
Pin Name	**Pin Number**	**Pin Type**	**Pin Name**	**Pin Number**	**Pin Type**
RXDV	18	Output	TXEN	23	Input
RXD3	13	Output	TXD3	27	Input
RXD2	14	Output	TXD2	26	Input
RXD1	15	Output	TXD1	25	Input
RXD0	16	Output	TXD0	24	Input
TXEN	23	Input	RXDV	18	Output
TXD3	27	Input	RXD3	13	Output
TXD2	26	Input	RXD2	14	Output
TXD1	25	Input	RXD1	15	Output
TXD0	24	Input	RXD0	16	Output

Downloaded from Arrow.com.

3.5 MII Management (MIIM) Interface

The KSZ8081MNX/RNB supports the IEEE 802.3 MII management interface, also known as the Management Data Input/Output (MDIO) interface. This interface allows an upper-layer device, such as a MAC processor, to monitor and control the state of the KSZ8081MNX/RNB. An external device with MIIM capability is used to read the PHY status and/or configure the PHY settings. More details about the MIIM interface can be found in Clause 22.2.4 of the IEEE 802.3 Specification.

The MIIM interface consists of the following:

- A physical connection that incorporates the clock line (MDC) and the data line (MDIO).
- A specific protocol that operates across the physical connection mentioned earlier, which allows the external controller to communicate with one or more PHY devices.
- A set of 16-bit MDIO registers. Registers [0:8] are standard registers, and their functions are defined in the IEEE 802.3 Specification. The additional registers are provided for expanded functionality. See the "Register Map" section for details.

As the default, the KSZ8081MNX/RNB supports unique PHY addresses 1 to 7, and broadcast PHY address 0. The latter is defined in the IEEE 802.3 Specification, and can be used to read/write to a single KSZ8081MNX/RNB device, or write to multiple KSZ8081MNX/RNB devices simultaneously.

PHY address 0 can optionally be disabled as the broadcast address by either hardware pin strapping (B-CAST_OFF, Pin 19) or software (Register 16h, Bit [9]), and assigned as a unique PHY address.

The PHYAD[2:0] strapping pins are used to assign a unique PHY address between 0 and 7 to each KSZ8081MNX/RNB device.

The MIIM interface can operates up to a maximum clock speed of 10 MHz MAC clock.

Table 3-4 shows the MII management frame format for the KSZ8081MNX/RNB.

TABLE 3-4: MII MANAGEMENT FRAME FORMAT FOR THE KSZ8081MNX/RNB

	Preamble	Start of Frame	Read/ Write OP Code	PHY Address Bits [4:0]	REG Address Bits [4:0]	TA	Data Bits [15:0]	Idle
Read	32 1's	01	10	00AAA	RRRRR	Z0	DDDDDDDD_DDDDDDDD	Z
Write	32 1's	01	01	00AAA	RRRRR	10	DDDDDDDD_DDDDDDDD	Z

3.6 Interrupt (INTRP)

INTRP (Pin 21) is an optional interrupt signal that is used to inform the external controller that there has been a status update to the KSZ8081MNX/RNB PHY register. Bits [15:8] of Register 1Bh are the interrupt control bits to enable and disable the conditions for asserting the INTRP signal. Bits [7:0] of Register 1Bh are the interrupt status bits to indicate which interrupt conditions have occurred. The interrupt status bits are cleared after reading Register 1Bh.

Bit [9] of Register 1Fh sets the interrupt level to active high or active low. The default is active low.

The MII management bus option gives the MAC processor complete access to the KSZ8081MNX/RNB control and status registers. Additionally, an interrupt pin eliminates the need for the processor to poll the PHY for status change.

3.7 HP Auto MDI/MDI-X

HP Auto MDI/MDI-X configuration eliminates the need to decide whether to use a straight cable or a crossover cable between the KSZ8081MNX/RNB and its link partner. This feature allows the KSZ8081MNX/RNB to use either type of cable to connect with a link partner that is in either MDI or MDI-X mode. The auto-sense function detects transmit and receive pairs from the link partner and assigns transmit and receive pairs to the KSZ8081MNX/RNB accordingly.

HP Auto MDI/MDI-X is enabled by default. It is disabled by writing a '1' to Register 1Fh, Bit [13]. MDI and MDI-X mode is selected by Register 1Fh, Bit [14] if HP Auto MDI/MDI-X is disabled.

An isolation transformer with symmetrical transmit and receive data paths is recommended to support Auto MDI/MDI-X.

Table 3-5 shows how the IEEE 802.3 Standard defines MDI and MDI-X.

© 2016-2017 Microchip Technology Inc.

Downloaded from Arrow.com.

TABLE 3-5: MDI/MDI-X PIN DEFINITION

MDI		MDI-X	
RJ-45 Pin	**Signal**	**RJ-45 Pin**	**Signal**
1	TX+	1	RX+
2	TX–	2	RX–
3	RX+	3	TX+
6	RX–	6	TX–

3.7.1 STRAIGHT CABLE

A straight cable connects an MDI device to an MDI-X device, or an MDI-X device to an MDI device. Figure 3-6 shows a typical straight cable connection between a NIC card (MDI device) and a switch or hub (MDI-X device).

FIGURE 3-6: TYPICAL STRAIGHT CABLE CONNECTION

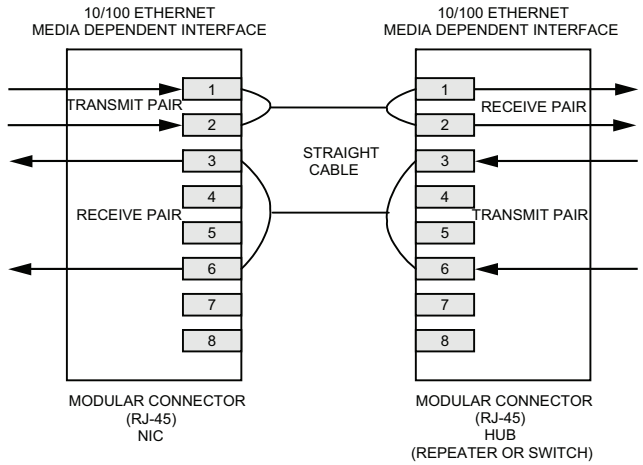

3.7.2 CROSSOVER CABLE

A crossover cable connects an MDI device to another MDI device, or an MDI-X device to another MDI-X device. Figure 3-7 shows a typical crossover cable connection between two switches or hubs (two MDI-X devices).

Downloaded from Arrow.com.

FIGURE 3-7: TYPICAL CROSSOVER CABLE CONNECTION

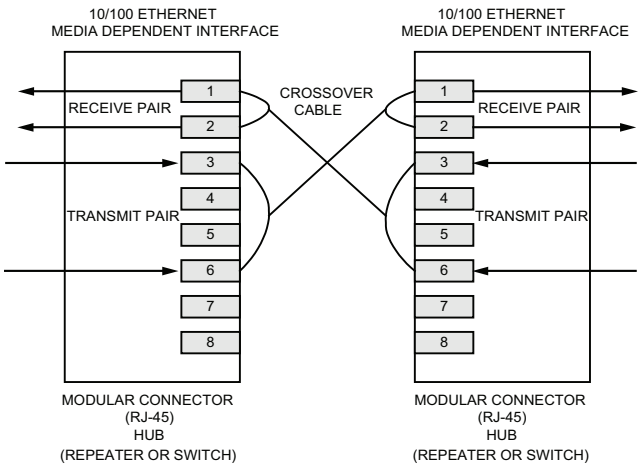

3.8 Loopback Mode

The KSZ8081MNX/RNB supports the following loopback operations to verify analog and/or digital data paths.

- Local (digital) loopback
- Remote (analog) loopback

3.8.1 LOCAL (DIGITAL) LOOPBACK

This loopback mode checks the MII/RMII transmit and receive data paths between the KSZ8081MNX/RNB and the external MAC, and is supported for both speeds (10 Mbps/100 Mbps) at full-duplex.

The loopback data path is shown in Figure 3-8.

1. The MII/RMII MAC transmits frames to the KSZ8081MNX/RNB.
2. Frames are wrapped around inside the KSZ8081MNX/RNB.
3. The KSZ8081MNX/RNB transmits frames back to the MII/RMII MAC.
4. Except the frames back to the RMII MAC, the transmit frames also go out from the copper port.

FIGURE 3-8: LOCAL (DIGITAL) LOOPBACK

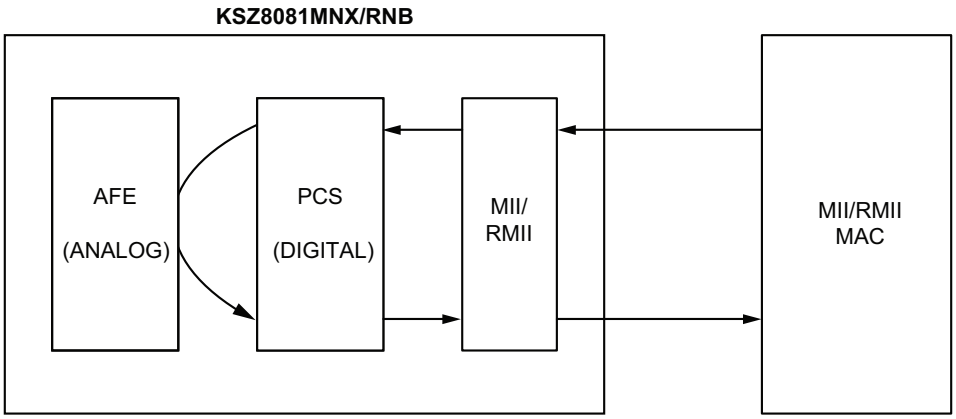

The following programming action and register settings are used for local loopback mode.

For 10 Mbps/100 Mbps loopback,

•Set Register 0h,

© 2016-2017 Microchip Technology Inc.

Downloaded from Arrow.com.

Bit [14] = 1 // Enable local loopback mode

Bit [13] = 0/1 // Select 10 Mbps/100 Mbps speed

Bit [12] = 0 // Disable auto-negotiation

Bit [8] = 1 // Select full-duplex mode

The following steps should be applied if unwanted frames appear outside the copper port in the local feedback.

1. Set register 1Fh bit [3] to ‘1’ to disable the transmitter.
2. Run local loopback test as above.
3. Set register 1Fh bit [3] to ‘0’ to enable the transmitter.

3.8.2 REMOTE (ANALOG) LOOPBACK

This loopback mode checks the line (differential pairs, transformer, RJ-45 connector, Ethernet cable) transmit and receive data paths between the KSZ8081MNX/RNB and its link partner, and is supported for 100BASE-TX full-duplex mode only.

The loopback data path is shown in Figure 3-9.

1. The Fast Ethernet (100BASE-TX) PHY link partner transmits frames to the KSZ8081MNX/RNB.
2. Frames are wrapped around inside the KSZ8081MNX/RNB.
3. The KSZ8081MNX/RNB transmits frames back to the Fast Ethernet (100BASE-TX) PHY link partner.

FIGURE 3-9: REMOTE (ANALOG) LOOPBACK

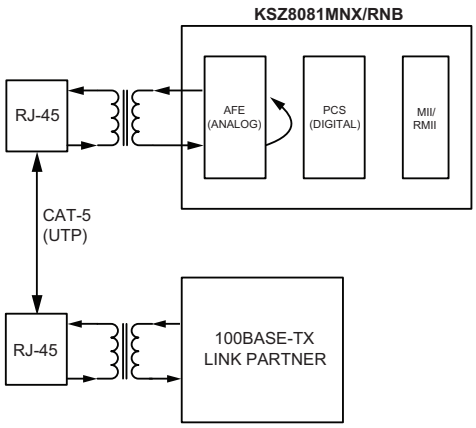

The following programming steps and register settings are used for remote loopback mode.

1.Set Register 0h,

Bits [13] = 1 // Select 100 Mbps speed

Bit [12] = 0 // Disable auto-negotiation

Bit [8] = 1 // Select full-duplex mode

or just auto-negotiate and link up at 100BASE-TX full-duplex mode with the link partner.

Downloaded from Arrow.com.

2.Set Register 1Fh,

Bit [2] = 1 // Enable remote loopback mode

3.9 LinkMD® Cable Diagnostic

The LinkMD function uses time-domain reflectometry (TDR) to analyze the cabling plant for common cabling problems. These include open circuits, short circuits, and impedance mismatches.

LinkMD works by sending a pulse of known amplitude and duration down the MDI or MDI-X pair, then analyzing the shape of the reflected signal to determine the type of fault. The time duration for the reflected signal to return provides the approximate distance to the cabling fault. The LinkMD function processes this TDR information and presents it as a numerical value that can be translated to a cable distance.

LinkMD is initiated by accessing Register 1Dh, the LinkMD Control/Status register, in conjunction with Register 1Fh, the PHY Control 2 register. The latter register is used to disable Auto MDI/MDI-X and to select either MDI or MDI-X as the cable differential pair for testing.

3.9.1 USAGE

The following is a sample procedure for using LinkMD with Registers 1Dh and 1Fh:

1. Disable auto MDI/MDI-X by writing a ‘1’ to Register 1Fh, bit [13].
2. Start cable diagnostic test by writing a ‘1’ to Register 1Dh, bit [15]. This enable bit is self-clearing.
3. Wait (poll) for Register 1Dh, bit [15] to return a ‘0’, and indicating cable diagnostic test is completed.
4. Read cable diagnostic test results in Register 1Dh, bits [14:13]. The results are as follows:

   00 = normal condition (valid test)

   01 = open condition detected in cable (valid test)

   10 = short condition detected in cable (valid test)

   11 = cable diagnostic test failed (invalid test)

   The ‘11’ case, invalid test, occurs when the device is unable to shut down the link partner. In this instance, the test is not run, since it would be impossible for the device to determine if the detected signal is a reflection of the signal generated or a signal from another source.
5. Get distance to fault by concatenating Register 1Dh, bits [8:0] and multiplying the result by a constant of 0.38. The distance to the cable fault can be determined by the following formula:

   D (distance to cable fault) = 0.38 x (Register 1Dh, bits [8:0])

   D (distance to cable fault) is expressed in meters.

   Concatenated value of Registers 1Dh bits [8:0] should be converted to decimal before multiplying by 0.38.

   The constant (0.38) may be calibrated for different cabling conditions, including cables with a velocity of propagation that varies significantly from the norm.

© 2016-2017 Microchip Technology Inc.

Downloaded from Arrow.com.

3.10 NAND Tree Support

The KSZ8081MNX/RNB provides parametric NAND tree support for fault detection between chip I/Os and board. The NAND tree is a chain of nested NAND gates in which each KSZ8081MNX/RNB digital I/O (NAND tree input) pin is an input to one NAND gate along the chain. At the end of the chain, the TXD1 pin provides the output for the nested NAND gates.

The NAND tree test process includes:

- Enabling NAND tree mode
- Pulling all NAND tree input pins high
- Driving each NAND tree input pin low, sequentially, according to the NAND tree pin order
- Checking the NAND tree output to make sure there is a toggle high-to-low or low-to-high for each NAND tree input driven low

Table 3-6 and Table 3-7 list the NAND tree pin orders for KSZ8081MNX and KSZ8081RNB, respectively.

TABLE 3-6: NAND TREE TEST PIN ORDER FOR KSZ8081MNX

Pin Number	Pin Name	NAND Tree Description
11	MDIO	Input
12	MDC	Input
15	RXD1	Input
16	RXD0	Input
18	CRS_DV	Input
19	REF_CLK	Input
21	INTRP	Input
23	TXEN	Input
30	LED0	Input
24	TXD0	Input
25	TXD1	Output

Note 3-1 KS8081MNX supports partial NAND tree test pins. Table 3-6 lists partial NAND tree test pins. If full NAND tree testing is required, please use KSZ8091MNX device that supports all the required pins.

TABLE 3-7: NAND TREE TEST PIN ORDER FOR KSZ8081RNB

Pin Number	Pin Name	NAND Tree Description
11	MDIO	Input
12	MDC	Input
15	RXD1	Input
16	RXD0	Input
18	CRS_DV	Input
19	REF_CLK	Input
21	INTRP	Input
23	TXEN	Input
31	LED1	Input
30	LED0	Input
24	TXD0	Input
25	TXD1	Output

© 2016-2017 Microchip Technology Inc.

Downloaded from Arrow.com.

3.10.1 NAND TREE I/O TESTING

Use the following procedure to check for faults on the KSZ8081MNX/RNB digital I/O pin connections to the board:

1. Enable NAND tree mode using either hardware (NAND_Tree#, Pin 21) or software (Register 16h, Bit [5]).
2. Use board logic to drive all KSZ8081MNX/RNB NAND tree input pins high.
3. Use board logic to drive each NAND tree input pin, in KSZ8081MNX/RNB NAND tree pin order, as follows:
   a) Toggle the first pin (MDIO) from high to low, and verify that the TXD1 pin switches from high to low to indicate that the first pin is connected properly.
   b) Leave the first pin (MDIO) low.
   c) Toggle the second pin (MDC) from high to low, and verify that the TXD1 pin switches from low to high to indicate that the second pin is connected properly.
   d) eave the first pin (MDIO) and the second pin (MDC) low.
   e) Continue with this sequence until all KSZ8081MNX/RNB NAND tree input pins have been toggled.

Each KSZ8081MNX/RNB NAND tree input pin must cause the TXD1 output pin to toggle high-to-low or low-to-high to indicate a good connection. If the TXD1 pin fails to toggle when the KSZ8081MNX/RNB input pin toggles from high to low, the input pin has a fault.

3.11 Power Management

The KSZ8081MNX/RNB incorporates a number of power-management modes and features that provide methods to consume less energy. These are discussed in the following sections.

3.11.1 POWER-SAVING MODE

Power-saving mode is used to reduce the transceiver power consumption when the cable is unplugged. It is enabled by writing a ‘1’ to Register 1Fh, Bit [10], and is in effect when auto-negotiation mode is enabled and the cable is disconnected (no link).

In this mode, the KSZ8081MNX/RNB shuts down all transceiver blocks, except for the transmitter, energy detect, and PLL circuits.

By default, power-saving mode is disabled after power-up.

3.11.2 ENERGY-DETECT POWER-DOWN MODE

Energy-detect power-down (EDPD) mode is used to further reduce transceiver power consumption when the cable is unplugged. It is enabled by writing a ‘0’ to Register 18h, Bit [11], and is in effect when auto-negotiation mode is enabled and the cable is disconnected (no link).

EDPD mode works with the PLL off (set by writing a ‘1’ to Register 10h, Bit [4] to automatically turn the PLL off in EDPD mode) to turn off all KSZ8081MNX/RNB transceiver blocks except the transmitter and energy-detect circuits.

Power can be reduced further by extending the time interval between transmissions of link pulses to check for the presence of a link partner. The periodic transmission of link pulses is needed to ensure the KSZ8081MNX/RNB and its link partner, when operating in the same low-power state and with Auto MDI/MDI-X disabled, can wake up when the cable is connected between them.

By default, energy-detect power-down mode is disabled after power-up.

3.11.3 POWER-DOWN MODE

Power-down mode is used to power down the KSZ8081MNX/RNB device when it is not in use after power-up. It is enabled by writing a ‘1’ to Register 0h, Bit [11].

In this mode, the KSZ8081MNX/RNB disables all internal functions except the MII management interface. The KSZ8081MNX/RNB exits (disables) power-down mode after Register 0h, Bit [11] is set back to ‘0’.

© 2016-2017 Microchip Technology Inc.

Downloaded from Arrow.com.

3.11.4 SLOW-OSCILLATOR MODE

Slow-oscillator mode is used to disconnect the input reference crystal/clock on XI (Pin 8) and select the on-chip slow oscillator when the KSZ8081MNX/RNB device is not in use after power-up. It is enabled by writing a ‘1’ to Register 11h, Bit [5].

Slow-oscillator mode works in conjunction with power-down mode to put the KSZ8081MNX/RNB device in the lowest power state, with all internal functions disabled except the MII management interface. To properly exit this mode and return to normal PHY operation, use the following programming sequence:

1. Disable slow-oscillator mode by writing a ‘0’ to Register 11h, Bit [5].
2. Disable power-down mode by writing a ‘0’ to Register 0h, Bit [11].
3. Initiate software reset by writing a ‘1’ to Register 0h, Bit [15].

3.12 Reference Circuit for Power and Ground Connections

The KSZ8081MNX/RNB is a single 3.3V supply device with a built-in regulator to supply the 1.2V core. The power and ground connections are shown in Figure 3-10 and Table 3-8 for 3.3V VDDIO.

FIGURE 3-10: KSZ8081MNX/RNB POWER AND GROUND CONNECTIONS

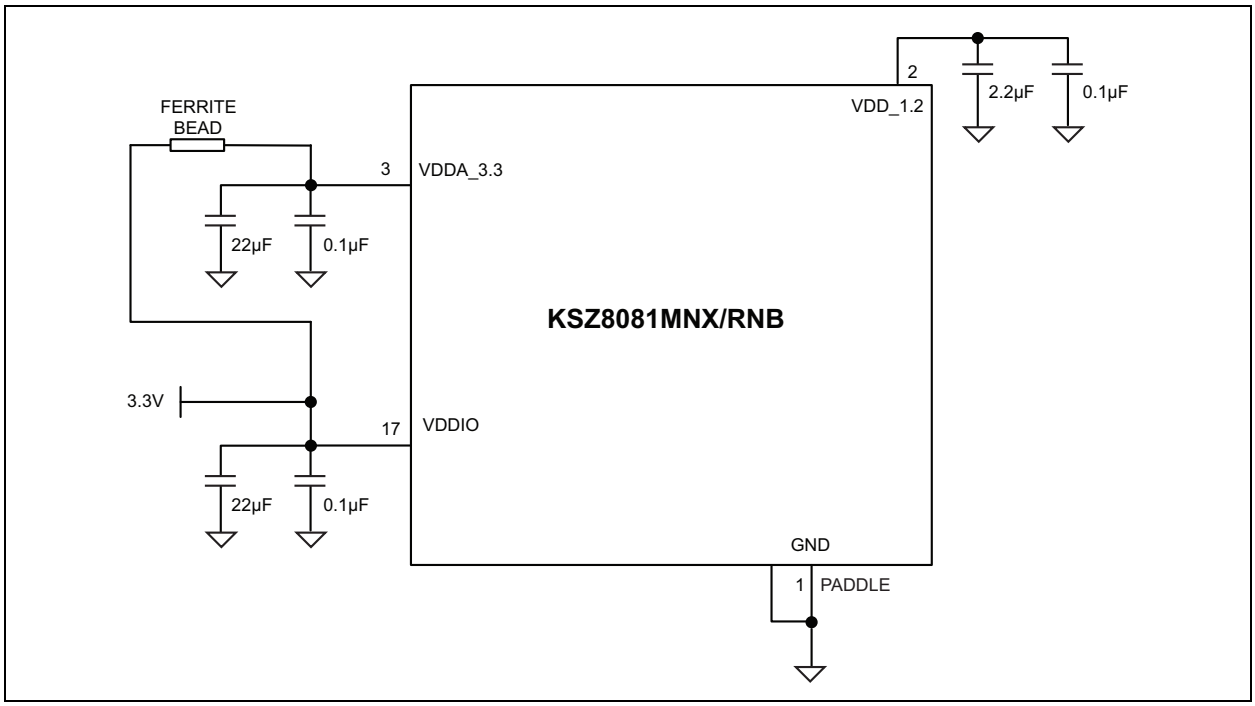

TABLE 3-8: KSZ8081MNX/RNB POWER PIN DESCRIPTIONS

Power Pin	Pin Number	Description
VDD_1.2	2	Decouple with 2.2 µF and 0.1 µF capacitors to ground.
VDDA_3.3	3	Connect to board’s 3.3V supply through a ferrite bead. Decouple with 22 µF and 0.1 µF capacitors to ground.

Downloaded from Arrow.com.

TABLE 3-8: KSZ8081MNX/RNB POWER PIN DESCRIPTIONS

Power Pin	Pin Number	Description
VDDIO	17	Connect to board's 3.3V supply for 3.3V VDDIO. Decouple with 22 µF and 0.1 µF capacitors to ground.

© 2016-2017 Microchip Technology Inc.

Downloaded from Arrow.com.

3.13 Typical Current/Power Consumption

Table 3-9, Table 3-10 ,and Table 3-11 show typical values for current consumption by the transceiver (VDDA_3.3) and digital I/O (VDDIO) power pins and typical values for power consumption by the KSZ8081MNX/RNB device for the indicated nominal operating voltages. These current and power consumption values include the transmit driver current and on-chip regulator current for the 1.2V core.

3.13.1 TRANSCEIVER (3.3V), DIGITAL I/OS (3.3V)

TABLE 3-9: TYPICAL CURRENT/POWER CONSUMPTION (VDDA_3.3 = 3.3V, VDDIO = 3.3V)

Condition	3.3V Transceiver (VDDA_3.3)	3.3V Digital I/Os (VDDIO)	Total Chip Power
	mA	mA	mW
100BASE-TX Link-up (no traffic)	34	12	152
100BASE-TX Full-duplex @ 100% utilization	34	12	142
10BASE-T Link-up (no traffic)	15	10	74.5
10BASE-T Full-duplex @ 100% utilization	27	10	114
Power-saving mode (Reg. 1Fh, Bit [10] = 1)	15	10	74.5
EDPD mode (Reg. 18h, Bit [11] = 0)	11	10	61.3
EDPD mode (Reg. 18h, Bit [11] = 0) and PLL off (Reg. 10h, Bit [4] = 1)	3.55	1.35	15.1
Software power-down mode (Reg. 0h, Bit [11] =1)	2.29	1.34	10.9
Software power-down mode (Reg. 0h, Bit [11] =1) and slow-oscillator mode (Reg. 11h, Bit [5] =1)	1.15	0.29	4.52

3.13.2 TRANSCEIVER (3.3V), DIGITAL I/OS (2.5V)

TABLE 3-10: TYPICAL CURRENT/POWER CONSUMPTION (VDDA_3.3 = 3.3V, VDDIO = 2.5V)

Condition	3.3V Transceiver (VDDA_3.3)	3.3V Digital I/Os (VDDIO)	Total Chip Power
	mA	mA	mW
100BASE-TX Link-up (no traffic)	34	12	152
100BASE-TX Full-duplex @ 100% utilization	34	12	142
10BASE-T Link-up (no traffic)	15	10	74.5
10BASE-T Full-duplex @ 100% utilization	27	10	114
Power-saving mode (Reg. 1Fh, Bit [10] = 1)	15	10	74.5
EDPD mode (Reg. 18h, Bit [11] = 0)	11	10	61.3
EDPD mode (Reg. 18h, Bit [11] = 0) and PLL off (Reg. 10h, Bit [4] = 1)	3.55	1.35	15.1
Software power-down mode (Reg. 0h, Bit [11] =1)	2.29	1.34	10.9
Software power-down mode (Reg. 0h, Bit [11] =1) and slow-oscillator mode (Reg. 11h, Bit [5] =1)	1.15	0.29	4.52

© 2016-2017 Microchip Technology Inc.

Downloaded from Arrow.com.

3.13.3 TRANSCEIVER (3.3V), DIGITAL I/OS (1.8V)

TABLE 3-11: TYPICAL CURRENT/POWER CONSUMPTION (VDDA_3.3 = 3.3V, VDDIO = 1.8V)

Condition	3.3V Transceiver (VDDA_3.3)	1.8V Digital I/Os (VDDIO)	Total Chip Power
	mA	mA	mW
100BASE-TX Link-up (no traffic)	34	11	132
100BASE-TX Full-duplex @ 100% utilization	34	12	134
10BASE-T Link-up (no traffic)	15	9.0	65.7
10BASE-T Full-duplex @ 100% utilization	27	9.0	105
Power-saving mode (Reg. 1Fh, Bit [10] = 1)	15	9.0	65.7
EDPD mode (Reg. 18h, Bit [11] = 0)	11	9.0	52.5
EDPD mode (Reg. 18h, Bit [11] = 0) and PLL off (Reg. 10h, Bit [4] = 1)	4.05	1.21	15.5
Software power-down mode (Reg. 0h, Bit [11] =1)	2.79	1.21	11.4
Software power-down mode (Reg. 0h, Bit [11] =1) and slow-oscillator mode (Reg. 11h, Bit [5] =1)	1.65	0.19	5.79

© 2016-2017 Microchip Technology Inc.

Downloaded from Arrow.com.

4.0 REGISTER DESCRIPTIONS

4.1 Register Map

TABLE 4-1: REGISTER MAP

Register Number (Hex)	Description
0	Basic Control Register
1h	Basic Status
2h	PHY Identifier 1
3h	PHY Identifier 2
4h	Auto-Negotiation Advertisement
5h	Auto-Negotiation Link Partner Ability
6h	Auto-Negotiation Expansion
7h	Auto-Negotiation Next Page
8h	Link Partner Next Page Ability
9h	Reserved
10h	Digital Reserved Control
11h	AFE Control 1
12h – 14h	Reserved
15h	RXER Counter
16h	Operation Mode Strap Override
17h	Operation Mode Strap Status
18h	Expanded Control
19h – 1Ah	Reserved
1Bh	Interrupt Control/Status
1Ch	Reserved
1Dh	LinkMD Control/Status
1Eh	PHY Control 1
1Fh	PHY Control 2

Downloaded from Arrow.com.

4.2 Register Description

TABLE 4-2: REGISTER DESCRIPTION

Address	Name	Description	Mode	Default
Register 0h – Basic Control				
0.15	Reset	1 = Software reset 0 = Normal operation This bit is self-cleared after a '1' is written to it.	RW/SC	0
0.14	Loopback	1 = Loopback mode 0 = Normal operation	RW	0
0.13	Speed Select	1 = 100 Mbps 0 = 10 Mbps This bit is ignored if auto-negotiation is enabled (Register 0.12 = 1).	RW	Set by the SPEED strapping pin. See the Strap-In Options – KSZ8081MNX section for details.
0.12	Auto-Negotiation Enable	1 = Enable auto-negotiation process 0 = Disable auto-negotiation process If enabled, the auto-negotiation result overrides the settings in registers 0.13 and 0.8.	RW	Set by the NWAYEN strapping pin. See the Strap-In Options – KSZ8081MNX section for details.
0.11	Power-Down	1 = Power-down mode 0 = Normal operation If software reset (Register 0.15) is used to exit power-down mode (Register 0.11 = 1), two software reset writes (Register 0.15 = 1) are required. The first write clears power-down mode; the second write resets the chip and re-latches the pin strapping pin values.	RW	0
0.10	Isolate	1 = Electrical isolation of PHY from MII/RMII 0 = Normal operation	RW	Set by the ISO strapping pin. See the Strap-In Options – KSZ8081MNX section for details.
0.9	Restart Auto-Negotiation	1 = Restart auto-negotiation process 0 = Normal operation. This bit is self-cleared after a '1' is written to it.	RW/SC	0
0.8	Duplex Mode	1 = Full-duplex 0 = Half-duplex	RW	The inverse of the DUPLEX strapping pin value. See the Strap-In Options – KSZ8081MNX section for details.
0.7	Collision Test	1 = Enable COL test 0 = Disable COL test	RW	0
0.6:0	Reserved	Reserved	RO	000_0000

© 2016-2017 Microchip Technology Inc.

Downloaded from Arrow.com.

TABLE 4-2: REGISTER DESCRIPTION (CONTINUED)

Address	Name	Description	Mode	Default
0.15	Reset	1 = Software reset 0 = Normal operation This bit is self-cleared after a '1' is written to it.	RW/SC	0
0.14	Loopback	1 = Loopback mode 0 = Normal operation	RW	0
0.13	Speed Select	1 = 100 Mbps 0 = 10 Mbps This bit is ignored if auto-negotiation is enabled (Register 0.12 = 1).	RW	Set by the SPEED strapping pin. See the Strap-In Options – KSZ8081MNX section for details.
0.12	Auto-Negotiation Enable	1 = Enable auto-negotiation process 0 = Disable auto-negotiation process If enabled, the auto-negotiation result overrides the settings in registers 0.13 and 0.8.	RW	Set by the NWAYEN strapping pin. See the Strap-In Options – KSZ8081MNX section for details.
0.11	Power-Down	1 = Power-down mode 0 = Normal operation If software reset (Register 0.15) is used to exit power-down mode (Register 0.11 = 1), two software reset writes (Register 0.15 = 1) are required. The first write clears power-down mode; the second write resets the chip and re-latches the pin strapping pin values.	RW	0
0.10	Isolate	1 = Electrical isolation of PHY from MII/RMII 0 = Normal operation	RW	Set by the ISO strapping pin. See the Strap-In Options – KSZ8081MNX section for details.
0.9	Restart Auto-Negotiation	1 = Restart auto-negotiation process 0 = Normal operation. This bit is self-cleared after a '1' is written to it.	RW/SC	0
0.8	Duplex Mode	1 = Full-duplex 0 = Half-duplex	RW	The inverse of the DUPLEX strapping pin value. See the Strap-In Options – KSZ8081MNX section for details.
0.7	Collision Test	1 = Enable COL test 0 = Disable COL test	RW	0
0.6:0	Reserved	Reserved	RO	000_0000
Register 1h – Basic Status				
1.15	100BASE-T4	1 = T4 capable 0 = Not T4 capable	RO	0
1.14	100BASE-TX Full-Duplex	1 = Capable of 100 Mbps full-duplex 0 = Not capable of 100 Mbps full-duplex	RO	1
1.13	100BASE-TX Half-Duplex	1 = Capable of 100 Mbps half-duplex 0 = Not capable of 100 Mbps half-duplex	RO	1
1.12	10BASE-T Full-Duplex	1 = Capable of 10 Mbps full-duplex 0 = Not capable of 10 Mbps full-duplex	RO	1

Downloaded from Arrow.com.

TABLE 4-2: REGISTER DESCRIPTION (CONTINUED)

Address	Name	Description	Mode	Default
1.11	10BASE-T Half-Duplex	1 = Capable of 10 Mbps half-duplex 0 = Not capable of 10 Mbps half-duplex	RO	1
1.10:7	Reserved	Reserved	RO	000_0
1.6	No Preamble	1 = Preamble suppression 0 = Normal preamble	RO	1
1.5	Auto-Negotiation Complete	1 = Auto-negotiation process completed 0 = Auto-negotiation process not completed	RO	0
1.4	Remote Fault	1 = Remote fault 0 = No remote fault	RO/LH	0
1.3	Auto-Negotiation Ability	1 = Can perform auto-negotiation 0 = Cannot perform auto-negotiation	RO	1
1.2	Link Status	1 = Link is up 0 = Link is down	RO/LL	0
1.1	Jabber Detect	1 = Jabber detected 0 = Jabber not detected (default is low)	RO/LH	0
1.0	Extended Capability	1 = Supports extended capability registers	RO	1
Register 2h – PHY Identifier 1				
2.15:0	PHY ID Number	Assigned to the 3rd through 18th bits of the Organizationally Unique Identifier (OUI). KENDIN Communication's OUI is 0010A1 (hex).	RO	0022h
Register 3h – PHY Identifier 2				
3.15:10	PHY ID Number	Assigned to the 19th through 24th bits of the Organizationally Unique Identifier (OUI). KENDIN Communication's OUI is 0010A1 (hex).	RO	0001_01
3.9:4	Model Number	Six-bit manufacturer's model number	RO	01_0110
3.3:0	Revision Number	Four-bit manufacturer's revision number	RO	Rev. A and Rev. A2=0x0. Rev. A3=0x1
Register 4h – Auto-Negotiation Advertisement				
4.15	Next Page	1 = Next page capable 0 = No next page capability Note: Recommended to set this bit to "0".	RW	0
4.14	Reserved	Reserved	RO	0
4.13	Remote Fault	1 = Remote fault supported 0 = No remote fault	RW	0
4.12	Reserved	Reserved	RO	0
4.11:10	Pause	[00] = No pause [10] = Asymmetric pause [01] = Symmetric pause [11] = Asymmetric and symmetric pause	RW	00
4.9	100BASE-T4	1 = T4 capable 0 = No T4 capability	RO	0

© 2016-2017 Microchip Technology Inc.

Downloaded from Arrow.com.

TABLE 4-2: REGISTER DESCRIPTION (CONTINUED)

Address	Name	Description	Mode	Default
4.8	100BASE-TX Full-Duplex	1 = 100 Mbps full-duplex capable 0 = No 100 Mbps full-duplex capability	RW	Set by the SPEED strapping pin. See the Strap-In Options – KSZ8081MNX section for details.
4.7	100BASE-TX Half-Duplex	1 = 100 Mbps half-duplex capable 0 = No 100 Mbps half-duplex capability	RW	Set by the SPEED strapping pin. See the Strap-In Options – KSZ8081MNX section for details.
4.6	10BASE-T Full-Duplex	1 = 10 Mbps full-duplex capable 0 = No 10 Mbps full-duplex capability	RW	1
4.5	10BASE-T Half-Duplex	1 = 10 Mbps half-duplex capable 0 = No 10 Mbps half-duplex capability	RW	1
4.4:0	Selector Field	[00001] = IEEE 802.3	RW	0_0001
Register 5h – Auto-Negotiation Link Partner Ability				
5.15	Next Page	1 = Next page capable 0 = No next page capability	RO	0
5.14	Acknowledge	1 = Link code word received from partner 0 = Link code word not yet received	RO	0
5.13	Remote Fault	1 = Remote fault detected 0 = No remote fault	RO	0
5.12	Reserved	Reserved	RO	0
5.11:10	Pause	[00] = No pause [10] = Asymmetric pause [01] = Symmetric pause [11] = Asymmetric and symmetric pause	RO	00
5.9	100BASE-T4	1 = T4 capable 0 = No T4 capability	RO	0
5.8	100BASE-TX Full-Duplex	1 = 100 Mbps full-duplex capable 0 = No 100 Mbps full-duplex capability	RO	0
Register 5h – Auto-Negotiation Link Partner Ability				
5.7	100BASE-TX Half-Duplex	1 = 100 Mbps half-duplex capable 0 = No 100 Mbps half-duplex capability	RO	0
5.6	10BASE-T Full-Duplex	1 = 10 Mbps full-duplex capable 0 = No 10 Mbps full-duplex capability	RO	0
5.5	10BASE-T Half-Duplex	1 = 10 Mbps half-duplex capable 0 = No 10 Mbps half-duplex capability	RO	0
5.4:0	Selector Field	[00001] = IEEE 802.3	RO	0_0001
Register 6h – Auto-Negotiation Expansion				
6.15:5	Reserved	Reserved	RO	0000_0000_000
6.4	Parallel Detection Fault	1 = Fault detected by parallel detection 0 = No fault detected by parallel detection	RO/LH	0
6.3	Link Partner Next Page Able	1 = Link partner has next page capability 0 = Link partner does not have next page capability	RO	0

Downloaded from Arrow.com.

TABLE 4-2: REGISTER DESCRIPTION (CONTINUED)

Address	Name	Description	Mode	Default
6.2	Next Page Able	1 = Local device has next page capability 0 = Local device does not have next page capability	RO	1
6.1	Page Received	1 = New page received 0 = New page not received yet	RO/LH	0
6.0	Link Partner Auto-Negotia-tion Able	1 = Link partner has auto-negotiation capability 0 = Link partner does not have auto-negotiation capability	RO	0
Register 7h – Auto-Negotiation Next Page				
7.15	Next Page	1 = Additional next pages will follow 0 = Last page	RW	0
7.14	Reserved	Reserved	RO	0
7.13	Message Page	1 = Message page 0 = Unformatted page	RW	1
7.12	Acknowledge 2	1 = Will comply with message 0 = Cannot comply with message	RW	0
7.11	Toggle	1 = Previous value of the transmitted link code word equaled logic 1 0 = Logic 0	RO	0
7.10:0	Message Field	11-bit wide field to encode 2048 messages	RW	000_0000_0001
Register 8h – Link Partner Next Page Ability				
8.15	Next Page	1 = Additional next pages will follow 0 = Last page	RO	0
8.14	Acknowledge	1 = Successful receipt of link word 0 = No successful receipt of link word	RO	0
8.13	Message Page	1 = Message page 0 = Unformatted page	RO	0
8.12	Acknowledge2	1 = Can act on the information 0 = Cannot act on the information	RO	0
8.11	Toggle	1 = Previous value of transmitted link code word equal to logic 0 0 = Previous value of transmitted link code word equal to logic 1	RO	0
8.10:0	Message Field	11-bit wide field to encode 2048 messages	RO	000_0000_0000
Register 10h – Digital Reserved Control				
10.15:5	Reserved	Reserved	RW	0000_0000_000
10.4	PLL Off	1 = Turn PLL off automatically in EDPD mode 0 = Keep PLL on in EDPD mode. See also Register 18h, Bit [11] for EDPD mode	RW	0
10.3:0	Reserved	Reserved	RW	0000
Register 11h – AFE Control 1				
11.15:6	Reserved	Reserved	RW	0000_0000_00

© 2016-2017 Microchip Technology Inc.

Downloaded from Arrow.com.

TABLE 4-2: REGISTER DESCRIPTION (CONTINUED)

Address	Name	Description	Mode	Default
11.5	Slow-Oscillator Mode Enable	Slow-oscillator mode is used to disconnect the input reference crystal/clock on the XI pin and select the on-chip slow oscillator when the KSZ8081MNX/RNB device is not in use after power-up. 1 = Enable 0 = Disable This bit automatically sets software power-down to the analog side when enabled.	RW	0
11.4:0	Reserved	Reserved	RW	0_0000
Register 15h – RXER Counter				
15.15:0	RXER Counter	Receive error counter for symbol error frames	RO/SC	0000h
Register 16h – Operation Mode Strap Override				
16.15	Reserved Factory Mode	0 = Normal operation 1 = Factory test mode If TXC (Pin 22) latches in a pull-up value at the de-assertion of reset, write a ‘0’ to this bit to clear Reserved Factory Mode. This bit applies only to KSZ8081MNX.	RW	0 Set by the pull-up/pull-down value of TXC (Pin 22).
16.14:11	Reserved	Reserved	RW	000_0
16.10	Reserved	Reserved	RO	0
16.9	B-CAST_OFF Override	1 = Override strap-in for B-CAST_OFF If bit is ‘1’, PHY Address 0 is non-broadcast.	RW	0
16.8	Reserved	Reserved	RW	0
16.7	MII B-to-B Override	1 = Override strap-in for MII back-to-back mode (also set Bit 0 of this register to ‘1’) This bit applies only to KSZ8081MNX.	RW	0
16.6	RMII B-to-B Override	1 = Override strap-in for RMII Back-to-Back mode (also set Bit 1 of this register to ‘1’) This bit applies only to KSZ8081RNB.	RW	0
16.5	NAND Tree Override	1 = Override strap-in for NAND tree mode	RW	0
16.4:2	Reserved	Reserved	RW	0_00
16.1	RMII Override	1 = Override strap-in for RMII mode This bit applies only to KSZ8081RNB.	RW	0
16.0	MII Override	1 = Override strap-in for MII mode This bit applies only to KSZ8081MNX.	RW	1

Downloaded from Arrow.com.

TABLE 4-2: REGISTER DESCRIPTION (CONTINUED)

Address	Name	Description	Mode	Default
Register 17h – Operation Mode Strap Status				
17.15:13	PHYAD[2:0] Strap-In Status	[000] = Strap to PHY Address 0 [001] = Strap to PHY Address 1 [010] = Strap to PHY Address 2 [011] = Strap to PHY Address 3 [100] = Strap to PHY Address 4 [101] = Strap to PHY Address 5 [110] = Strap to PHY Address 6 [111] = Strap to PHY Address 7	RO	—
17.12:10	Reserved	Reserved	RO	—
17.9	B-CAST_OFF Strap-In Status	1 = Strap to B-CAST_OFF If bit is ‘1’, PHY Address 0 is non-broadcast.	RO	—
17.8	Reserved	Reserved	RO	—
17.7	MII B-to-B Strap-In Status	1 = Strap to MII back-to-back mode This bit applies only to KSZ8081MNX.	RO	—
17.6	RMII B-to-B Strap-In Status	1 = Strap to RMII Back-to-Back mode This bit applies only to KSZ8081RNB.	RO	—
17.5	NAND Tree Strap-In Status	1 = Strap to NAND tree mode	RO	—
17.4:2	Reserved	Reserved	RO	—
17.1	RMII Strap-In Status	1 = Strap to RMII mode This bit applies only to KSZ8081RNB.	RO	—
17.0	MII Strap-In Status	1 = Strap to MII mode This bit applies only to KSZ8081MNX.	RO	—
Register 18h – Expanded Control				
18.15:12	Reserved	Reserved	RW	0000
18.11	EDPD Disabled	Energy-detect power-down mode 1 = Disable 0 = Enable See also Register 10h, Bit [4] for PLL off.	RW	1
18.10	100BASE-TX Latency	1 = MII output is random latency 0 = MII output is fixed latency For both settings, all bytes of received preamble are passed to the MII output. This bit applies only to KSZ8081MNX.	RW	0
18.9:7	Reserved	Reserved	RW	00_0
18.6	10BASE-T Preamble Restore	1 = Restore received preamble to MII output 0 = Remove all seven bytes of preamble before sending frame (starting with SFD) to MII output This bit applies only to KSZ8081MNX,	RW	0

© 2016-2017 Microchip Technology Inc.

Downloaded from Arrow.com.

TABLE 4-2: REGISTER DESCRIPTION (CONTINUED)

Address	Name	Description	Mode	Default
18.5:0	Reserved	Reserved	RW	00_0000
Register 1Bh – Interrupt Control/Status				
1B.15	Jabber Interrupt Enable	1 = Enable jabber interrupt 0 = Disable jabber interrupt	RW	0
1B.14	Receive Error Interrupt Enable	1 = Enable receive error interrupt 0 = Disable receive error interrupt	RW	0
1B.13	Page Received Interrupt Enable	1 = Enable page received interrupt 0 = Disable page received interrupt	RW	0
1B.12	Parallel Detect Fault Interrupt Enable	1 = Enable parallel detect fault interrupt 0 = Disable parallel detect fault interrupt	RW	0
1B.11	Link Partner Acknowledge Interrupt Enable	1 = Enable link partner acknowledge interrupt 0 = Disable link partner acknowledge interrupt	RW	0
1B.10	Link-Down Interrupt Enable	1= Enable link-down interrupt 0 = Disable link-down interrupt	RW	0
1B.9	Remote Fault Interrupt Enable	1 = Enable remote fault interrupt 0 = Disable remote fault interrupt	RW	0
1B.8	Link-Up Interrupt Enable	1 = Enable link-up interrupt 0 = Disable link-up interrupt	RW	0
1B.7	Jabber Interrupt	1 = Jabber occurred 0 = Jabber did not occur	RO/SC	0
1B.6	Receive Error Interrupt	1 = Receive error occurred 0 = Receive error did not occur	RO/SC	0
1B.5	Page Receive Interrupt	1 = Page receive occurred 0 = Page receive did not occur	RO/SC	0
1B.4	Parallel Detect Fault Interrupt	1 = Parallel detect fault occurred 0 = Parallel detect fault did not occur	RO/SC	0
1B.3	Link Partner Acknowledge Interrupt	1 = Link partner acknowledge occurred 0 = Link partner acknowledge did not occur	RO/SC	0
1B.2	Link-Down Interrupt	1 = Link-down occurred 0 = Link-down did not occur	RO/SC	0
1B.1	Remote Fault Interrupt	1 = Remote fault occurred 0 = Remote fault did not occur	RO/SC	0
1B.0	Link-Up Interrupt	1 = Link-up occurred 0 = Link-up did not occur	RO/SC	0

Downloaded from Arrow.com.

TABLE 4-2: REGISTER DESCRIPTION (CONTINUED)

Address	Name	Description	Mode	Default
Register 1Dh – LinkMD Control/Status				
1D.15	Cable Diagnostic Test Enable	1 = Enable cable diagnostic test. After test has completed, this bit is self-cleared. 0 = Indicates cable diagnostic test (if enabled) has completed and the status information is valid for read.	RW/SC	0
1D.14:13	Cable Diagnostic Test Result	[00] = Normal condition [01] = Open condition has been detected in cable [10] = Short condition has been detected in cable [11] = Cable diagnostic test has failed	RO	00
1D.12	Short Cable Indicator	1 = Short cable (<10 meter) has been detected by LinkMD	RO	0
1D.11:9	Reserved	Reserved	RW	000
1D.8:0	Cable Fault Counter	Distance to fault	RO	0_0000_0000
Register 1Eh – PHY Control 1				
1E.15:10	Reserved	Reserved	RO	0000_00
1E.9	Enable Pause (Flow Control)	1 = Flow control capable 0 = No flow control capability	RO	0
1E.8	Link Status	1 = Link is up 0 = Link is down	RO	0
1E.7	Polarity Status	1 = Polarity is reversed 0 = Polarity is not reversed	RO	
1E.6	Reserved	Reserved	RO	0
1E.5	MDI/MDI-X State	1 = MDI-X 0 = MDI	RO	
1E.4	Energy Detect	1 = Signal present on receive differential pair 0 = No signal detected on receive differential pair	RO	0
1E.3	PHY Isolate	1 = PHY in isolate mode 0 = PHY in normal operation	RW	0
1E.2:0	Operation Mode Indication	[000] = Still in auto-negotiation [001] = 10BASE-T half-duplex [010] = 100BASE-TX half-duplex [011] = Reserved [100] = Reserved [101] = 10BASE-T full-duplex [110] = 100BASE-TX full-duplex [111] = Reserved	RO	000

© 2016-2017 Microchip Technology Inc.

Downloaded from Arrow.com.

TABLE 4-2: REGISTER DESCRIPTION (CONTINUED)

Address	Name	Description	Mode	Default
Register 1Fh – PHY Control 2				
1F.15	HP_MDIX	1 = HP Auto MDI/MDI-X mode 0 = Auto MDI/MDI-X mode	RW	1
1F.14	MDI/MDI-X Select	When Auto MDI/MDI-X is disabled, 1 = MDI-X mode Transmit on RXP,RXM (pins 5, 4) andReceive on TXP,TXM (pins 7, 6) 0 = MDI mode Transmit on TXP,TXM (pins 7, 6) and Receive on RXP,RXM (pins 5, 4)	RW	0
1F.13	Pair Swap Disable	1 = Disable Auto MDI/MDI-X 0 = Enable Auto MDI/MDI-X	RW	0
1F.12	Reserved	Reserved	RW	0
1F.11	Force Link	1 = Force link pass 0 = Normal link operation This bit bypasses the control logic and allows the transmitter to send a pattern even if there is no link.	RW	0
1F.10	Power Saving	1 = Enable power saving 0 = Disable power saving	RW	0
1F.9	Interrupt Level	1 = Interrupt pin active high 0 = Interrupt pin active low	RW	0
1F.8	Enable Jabber	1 = Enable jabber counter 0 = Disable jabber counter	RW	1
1F.7	RMII Reference Clock Select	1 = RMII 50 MHz clock mode; clock input to XI (Pin 9) is 50 MHz 0 = RMII 25 MHz clock mode; clock input to XI (Pin 9) is 25 MHz This bit applies only to KSZ8081RNB.	RW	0
1F.6	Reserved	Reserved	RW	0
1F.5:4	LED Mode	[00] =LED1: Speed LED0: Link/Activity [01] = LED1: Activity LED0: Link [10], [11] = Reserved	RW	00
1F.3	Disable Transmitter	1 = Disable transmitter 0 = Enable transmitter	RW	0
1F.2	Remote Loopback	1 = Remote (analog) loopback is enabled 0 = Normal mode	RW	0
1F.1	Enable SQE Test	1 = Enable SQE test 0 = Disable SQE test	RW	0
1F.0	Disable Data Scrambling	1 = Disable scrambler 0 = Enable scrambler	RW	0

Downloaded from Arrow.com.

5.0 OPERATIONAL CHARACTERISTICS

5.1 Absolute Maximum Ratings*

Supply Voltage (V_{IN})
($V_{DD_1.2}$) ..... –0.5V to +1.8V
(V_{DDIO}, $V_{DDA_3.3}$) ..... –0.5V to +5.0V

Input Voltage (all inputs) ..... –0.5V to +5.0V

Output Voltage (all outputs) ..... –0.5V to +5.0V

Lead Temperature (soldering, 10s) ..... 260°C

Storage Temperature (T_S) ..... –55°C to +150°C

* Exceeding the absolute maximum ratings can damage the device. Stresses greater than the absolute maximum rating can cause permanent damage to the device. Operation of the device at these or any other conditions above those specified in the operating sections of this specification is not implied. Maximum conditions for extended periods may affect reliability.

5.2 Operating Ratings**

Supply Voltage
($V_{DDIO_3.3}$, $V_{DDA_3.3}$) ..... +3.135V to +3.465V
($V_{DDIO_2.5}$) ..... +2.375V to +2.625V
($V_{DDIO_1.8}$) ..... +1.710V to +1.890V

Ambient Temperature
(T_A, Commercial) ..... 0°C to +70°C
(T_A, Industrial) ..... –40°C to +85°C
Maximum Junction Temperature (T_J max.) ..... +125°C
Thermal Resistance (T_{JA}) ..... 45.87°C/W
Thermal Resistance (T_{JC}) ..... 15.85°C/W
** The device is not guaranteed to function outside its operating ratings.

© 2016-2017 Microchip Technology Inc.

Downloaded from Arrow.com.

6.0 ELECTRICAL CHARACTERISTICS

Symbol	Parameter	Condition	Min.	Typ.	Max.	Units
Supply Current (V_{DDIO}, $V_{DDA_3.3}$ = 3.3V)						
$I_{DD1_3.3V}$	10BASE-T	Full-duplex traffic @ 100% utilization	—	41	—	mA
$I_{DD2_3.3V}$	100BASE-TX	Full-duplex traffic @ 100% utilization	—	47	—	mA
$I_{DD3_3.3V}$	EDPD Mode	Ethernet cable disconnected (reg. 18h.11 = 0)	—	20	—	mA
$I_{DD4_3.3V}$	Power-Down Mode	Software power-down (reg. 0h.11 = 1)	—	4	—	mA
CMOS Level Inputs						
V_{IH}	Input High Voltage	V_{DDIO} = 3.3V	2.0	—	—	V
		V_{DDIO} = 2.5V	1.8	—	—	
		V_{DDIO} = 1.8V	1.3	—	—	
V_{IL}	Input Low Voltage	V_{DDIO} = 3.3V	—	—	0.8	V
		V_{DDIO} = 2.5V	—	—	0.7	
		V_{DDIO} = 1.8V	—	—	0.5	
$\|I_{IN}\|$	Input Current	V_{IN} = GND ~ VDDIO	—	—	10	µA
CMOS Level Outputs						
V_{OH}	Output High Voltage	V_{DDIO} = 3.3V	2.4	—	—	V
		V_{DDIO} = 2.5V	2.0	—	—	
		V_{DDIO} = 1.8V	1.5	—	—	
V_{OL}	Output Low Voltage	V_{DDIO} = 3.3V	—	—	0.4	V
		V_{DDIO} = 2.5V	—	—	0.4	
		V_{DDIO} = 1.8V	—	—	0.3	
$\|I_{oz}\|$	Output Tri-State Leakage	—	—	—	10	µA
LED Output						
I_{LED}	Output Drive Current	Each LED pin (LED0, LED1)	—	8	—	mA
All Pull-Up/Pull-Down Pins (including Strapping Pins)						
pu	Internal Pull-Up Resistance	V_{DDIO} = 3.3V	30	45	73	kΩ
		V_{DDIO} = 2.5V	39	61	102	
		V_{DDIO} = 1.8V	48	99	178	
pd	Internal Pull-Down Resistance	V_{DDIO} = 3.3V	26	43	79	kΩ
		V_{DDIO} = 2.5V	34	59	113	
		V_{DDIO} = 1.8V	53	99	200	
100BASE-TX Transmit (measured differentially after 1:1 transformer)						
V_O	Peak Differential Output Voltage	100Ω termination across differential output	0.95	—	1.05	V
V_{IMB}	Output Voltage Imbalance	100Ω termination across differential output	—	—	2	%
t_r, t_f	Rise/Fall Time	—	3	—	5	ns
—	Rise/Fall Time Imbalance	—	0	—	0.5	ns
—	Duty Cycle Distortion	—	—	—	±0.25	ns
—	Overshoot	—	—	—	5	%
—	Output Jitter	Peak-to-peak	—	0.7	—	ns

Downloaded from Arrow.com.

Symbol	Parameter	Condition	Min.	Typ.	Max.	Units
10BASE-T Transmit (measured differentially after 1:1 transformer)						
V_P	Peak Differential Output Voltage	100Ω termination across differential output	2.2	—	2.8	V
	Jitter Added	Peak-to-peak	—	—	3.5	ns
t_r, t_f	Rise/Fall Time	—	—	25	—	ns
10BASE-T Receive						
V_{SQ}	Squelch Threshold	5 MHz square wave	—	400	—	mV
Transmitter – Drive Setting						
V_{SET}	Reference Voltage of I_{SET}	$R(I_{SET})$ = 6.49 kΩ	—	0.65	—	V
REF_CLK Output						
—	50 MHz RMII Clock Output Jitter	Peak-to-peak. (Applies only to KSZ8081RNB in RMII – 25 MHz clock mode)	—	300	—	ps
100 Mbps Mode – Industrial Applications Parameters						
—	Clock Phase Delay – XI Input to MII TXC Output	XI (25 MHz clock input) to MII TXC (25 MHz clock output) delay, referenced to rising edges of both clocks. (Applies only to KSZ8081MNX in MII mode)	15	20	25	ns
t_{llr}	Link Loss Reaction (Indication) Time	Link loss detected at receive differential inputs to PHY signal indication time for each of the following: 1. For LED mode 00, Speed LED output changes from low (100 Mbps) to high (10 Mbps, default state for link-down). 2. For LED mode 01, Link LED output changes from low (link-up) to high (link-down). 3. INTRP pin asserts for link-down status change.	—	4.4	—	µs

© 2016-2017 Microchip Technology Inc.

Downloaded from Arrow.com.

7.0 TIMING DIAGRAMS

7.1 MII SQE Timing (10BASE-T)

FIGURE 7-1: MII SQE TIMING (10BASE-T)

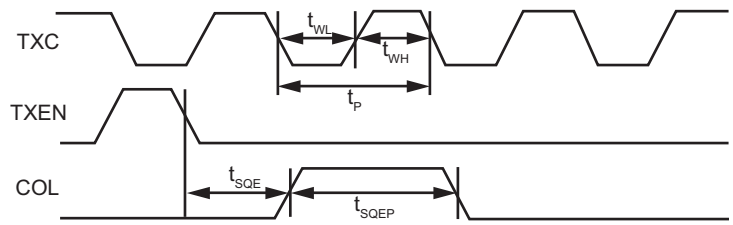

TABLE 7-1: MII SQE TIMING (10BASE-T) PARAMETERS

Timing Parameters	Description	Min.	Typ.	Max.	Units
t_P	TXC period	—	400	—	ns
t_{WL}	TXC pulse width low	—	200	—	ns
t_{WH}	TXC pulse width high	—	200	—	ns
t_{SQE}	COL (SQE) delay after TXEN de-asserted	—	2.2	—	µs
t_{SQEP}	COL (SQE) pulse duration	—	1.0	—	µs

7.2 MII Transmit Timing (10BASE-T)

FIGURE 7-2: MII TRANSMIT TIMING (10BASE-T)

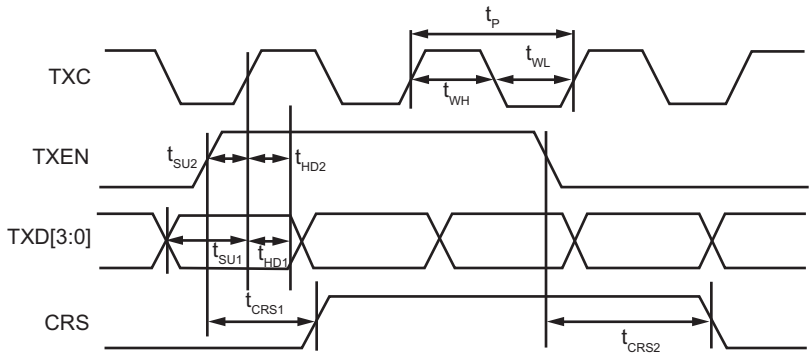

TABLE 7-2: MII TRANSMIT TIMING (10BASE-T) PARAMETERS

Timing Parameters	Description	Min.	Typ.	Max.	Units
t_P	TXC period	—	400	—	ns
t_{WL}	TXC pulse width low	—	200	—	ns
t_{WH}	TXC pulse width high	—	200	—	ns
t_{SU1}	TXD[3:0] setup to rising edge of TXC	120	—	—	ns
t_{SU2}	TXEN setup to rising edge of TXC	120	—	—	ns

Downloaded from Arrow.com.

TABLE 7-2: MII TRANSMIT TIMING (10BASE-T) PARAMETERS

Timing Parameters	Description	Min.	Typ.	Max.	Units
t_{HD1}	TXD[3:0] hold from rising edge of TXC	0	—	—	ns
t_{HD2}	TXEN hold from rising edge of TXC	0	—	—	ns
t_{CRS1}	TXEN high to CRS asserted latency		600	—	ns
t_{CRS2}	TXEN low to CRS de-asserted latency		1.0	—	µs

7.3 MII Receive Timing (10BASE-T)

FIGURE 7-3: MII RECEIVE TIMING (10BASE-T)

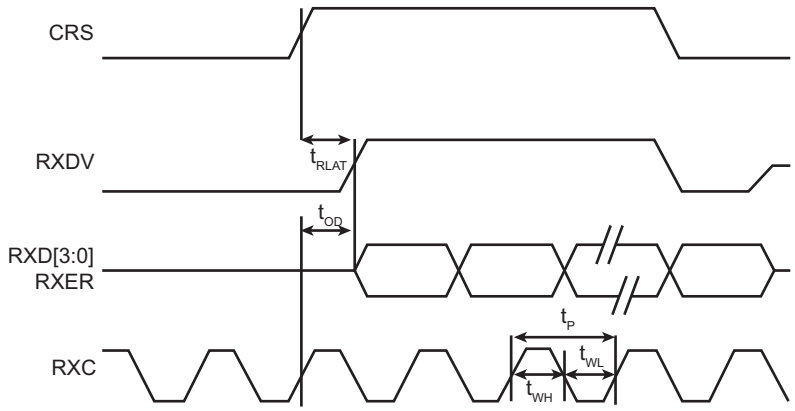

TABLE 7-3: MII RECEIVE TIMING (10BASE-T) PARAMETERS

Timing Parameters	Description	Min.	Typ.	Max.	Units
t_P	RXC period	—	400	—	ns
t_{WL}	RXC pulse width low	—	200	—	ns
t_{WH}	RXC pulse width high	—	200	—	ns
t_{OD}	(RXDV, RXD[3:0], RXER) output delay from rising edge of RXC	—	205	—	ns
t_{RLAT}	CRS to (RXDV, RXD[3:0]) latency	—	7.2	—	µs

© 2016-2017 Microchip Technology Inc.

Downloaded from Arrow.com.

7.4 MII Transmit Timing (BASE100BASE-TX)

FIGURE 7-4: MII TRANSMIT TIMING (BASE100BASE-TX)

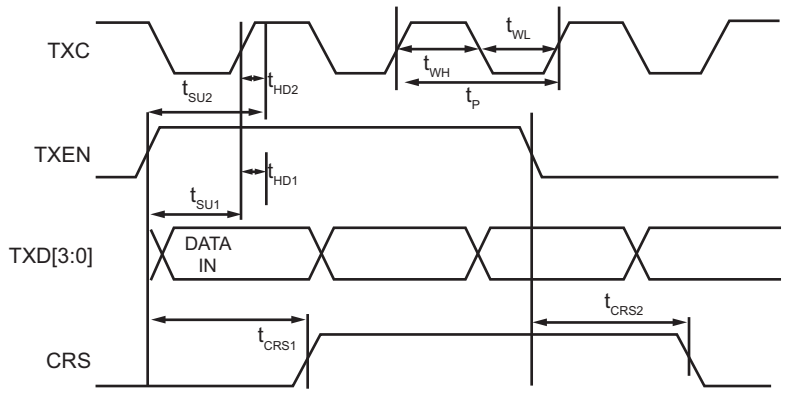

TABLE 7-4: MII TRANSMIT TIMING (BASE100BASE-TX) PARAMETERS

Timing Parameter	Description	Min.	Typ.	Max.	Units
t_P	TXC Period	—	40	—	ns
t_{WL}	TXC pulse width low	—	20	—	ns
t_{WH}	TXC pulse width high	—	20	—	ns
t_{SU1}	TXD[3:0] setup to rising edge of TXC	10	—	—	ns
t_{SU2}	TXEN setup to rising edge of TXC	10	—	—	ns
t_{HD1}	TXD[3:0] hold from rising edge of TXC	0	—	—	ns
t_{HD2}	TXEN hold from rising edge of TXC	0	—	—	ns
t_{CRS1}	TXEN high to CRS asserted latency	—	72	—	ns
t_{CRS2}	TXEN low to CRS de-asserted latency	—	72	—S	ns

7.5 MII Receive Timing (BASE100BASE-TX)

FIGURE 7-5: MII RECEIVE TIMING (BASE100BASE-TX)

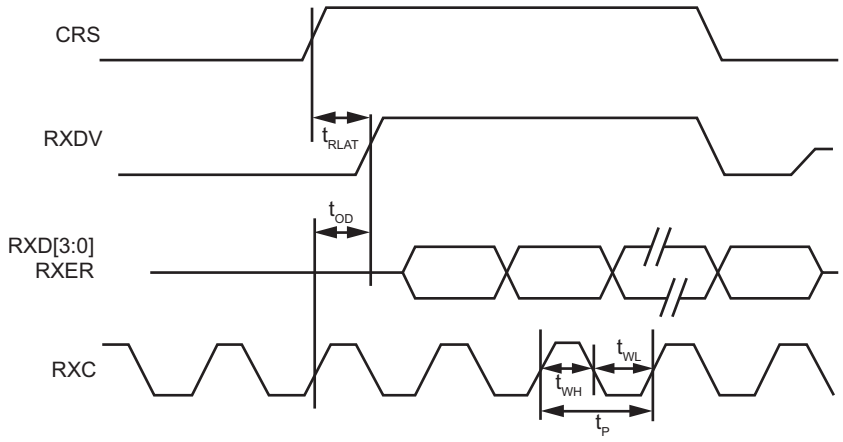

Downloaded from Arrow.com.

TABLE 7-5: MII RECEIVE TIMING (BASE100BASE-TX) PARAMETERS

Timing Parameter	Description	Min.	Typ.	Max.	Units
t_P	RXC period	—	40	—	ns
t_{WL}	RXC pulse width low	—	20	—	ns
t_{WH}	RXC pulse width high	—	20	—	ns
t_{OD}	(RXDV, RXD[3:0], RXER) output delay from rising edge of RXC	16	21	25	ns
t_{FLAT}	CRS to (RXDV, RXD[3:0] latency	—	170	—	ns

7.6 RMII Timing

FIGURE 7-6: RMII TIMING – DATA RECEIVED FROM RMII

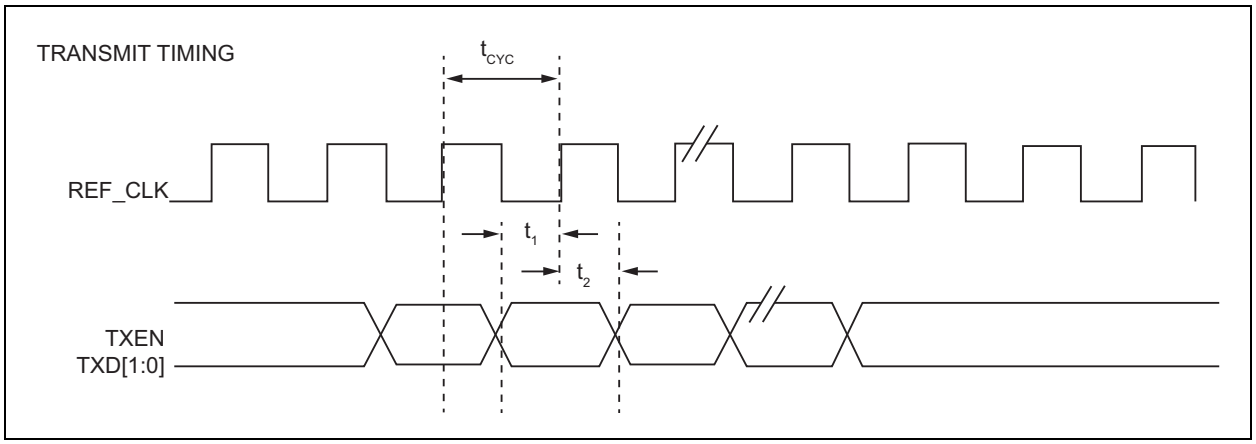

FIGURE 7-7: RMII TIMING – DATA INPUT TO RMII

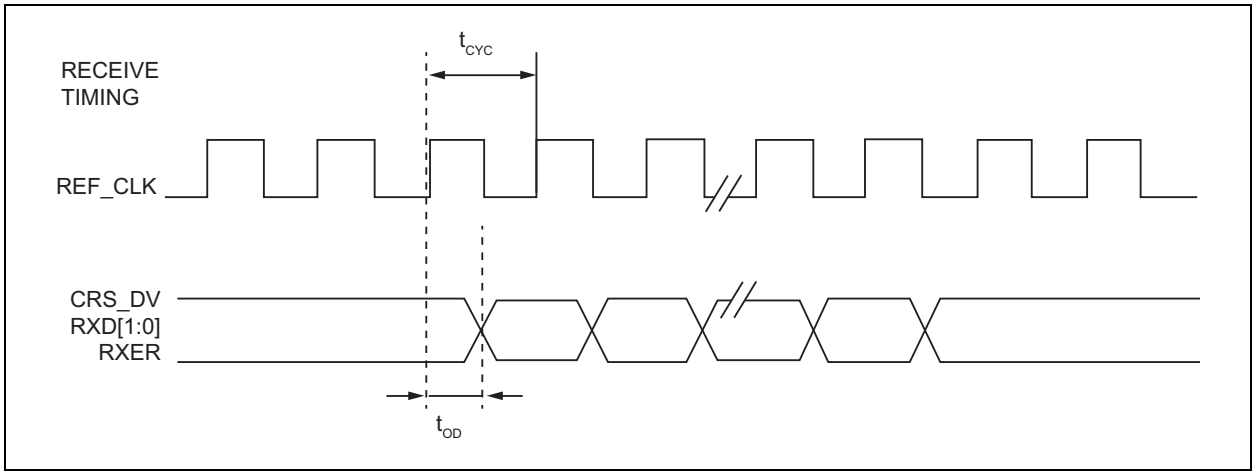

© 2016-2017 Microchip Technology Inc.

Downloaded from Arrow.com.

TABLE 7-6: RMII TIMING PARAMETERS – KSZ8081RNB (25 MHZ INPUT TO XI PIN, 50 MHZ OUTPUT FROM REF_CLK PIN)

Timing Parameter	Description	Min.	Typ.	Max	Units
t_{CYC}	Clock cycle	—	20	—	ns
t_1	Setup time	4	—	—	ns
t_2	Hold time	2	—	—	ns
t_{OD}	Output delay	7	10	13	ns

TABLE 7-7: RMII TIMING PARAMETERS – KSZ8081RNB (25 MHZ INPUT TO XI PIN)

Timing Parameter	Description	Min.	Typ.	Max	Units
t_{CYC}	Clock cycle	—	20	—	ns
t_1	Setup time	4	—	—	ns
t_2	Hold time	2	—	—	ns
t_{OD}	Output delay	8	11	13	ns

7.7 Auto-Negotiation Timing

FIGURE 7-8: AUTO-NEGOTIATION TIMING

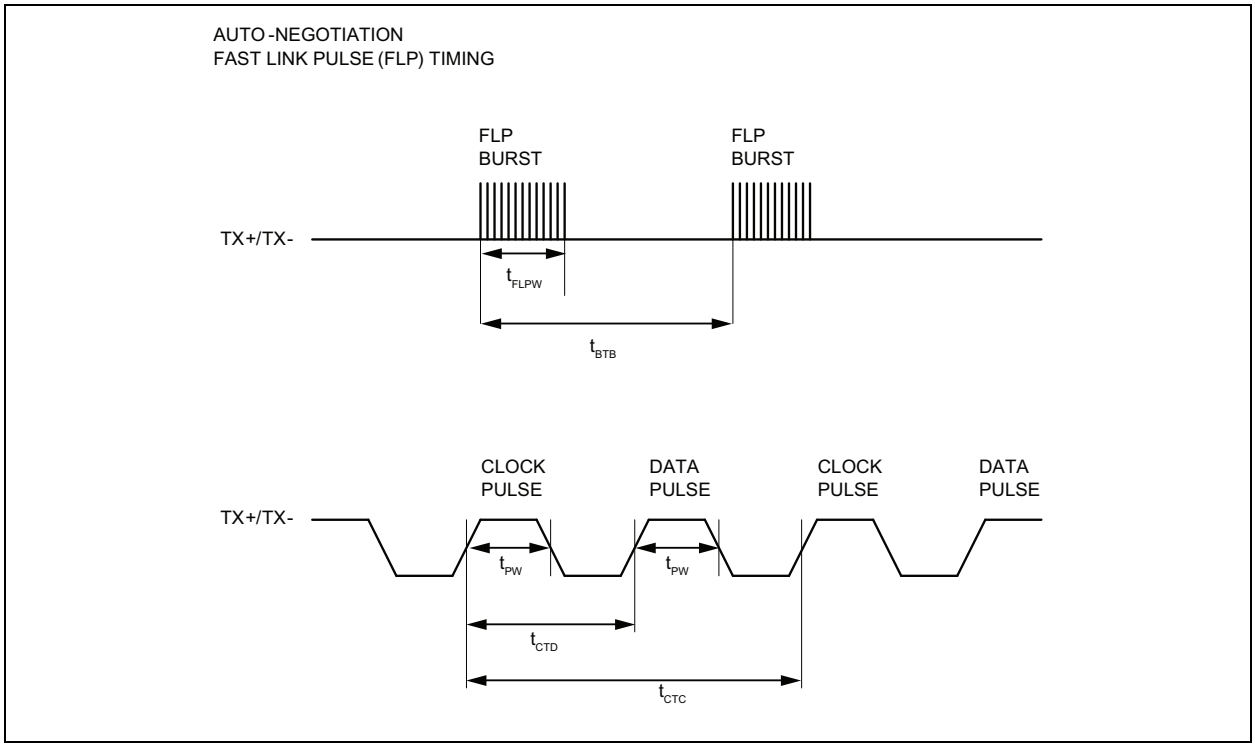

Downloaded from Arrow.com.

TABLE 7-8: AUTO-NEGOTIATION FAST LINK PULSE (FLP) TIMING PARAMETERS

Timing Parameter	Description	Min.	Typ.	Max.	Units
t_{BTB}	FLP burst to FLP burst	8	16	24	ms
t_{FLPW}	FLP burst width	—	2	—	ms
t_{PW}	Clock/Data pulse width	—	100	—	ns
t_{CTD}	Clock pulse to data pulse	55.5	64	69.5	µs
t_{CTC}	Clock pulse to clock pulse	111	128	139	µs
—	Number of clock/data pulses per FLP burst	17	—	33	—

7.8 MDC/MDIO Timing

FIGURE 7-9: MDC/MDIO TIMING

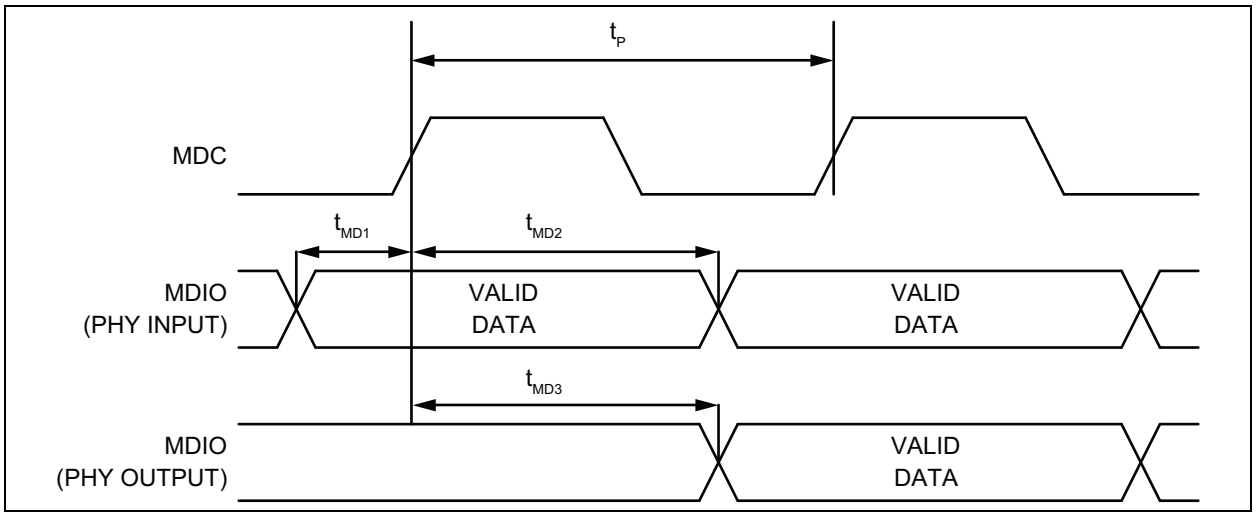

TABLE 7-9: MDC/MDIO TIMING PARAMETERS

Timing Parameter	Description	Min.	Typ.	Max.	Units
fc	MDC Clock Frequency	—	2.5	10	MHz
t_P	MDC period	—	400	—	ns
t_{MD1}	MDIO (PHY input) setup to rising edge of MDC	10	—	—	ns
t_{MD2}	MDIO (PHY input) hold from rising edge of MDC	4	—	—	ns
t_{MD3}	MDIO (PHY output) delay from rising edge of MDC	5	222	—	ns

© 2016-2017 Microchip Technology Inc.

Downloaded from Arrow.com.

7.9 Power-up/Reset Timing

The KSZ8081MNX/RNB reset timing requirement is summarized in Figure 7-10 and Table 7-10.

FIGURE 7-10: POWER-UP/RESET TIMING

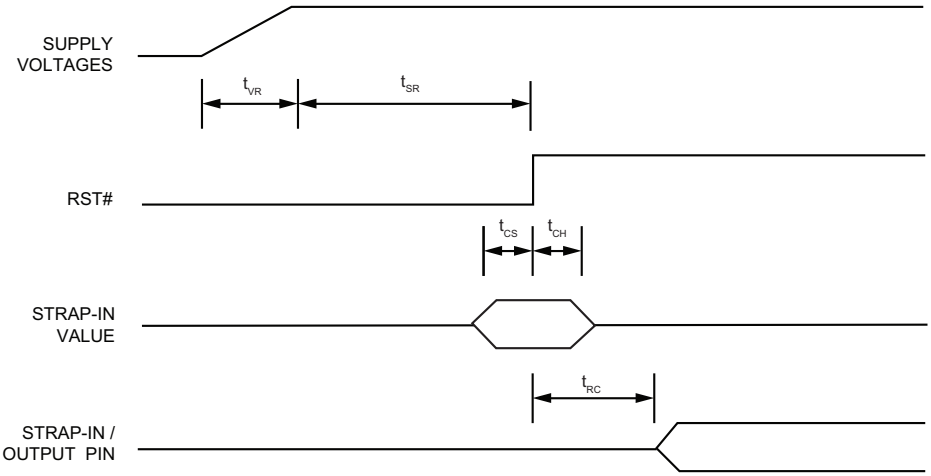

TABLE 7-10: POWER-UP/RESET TIMING PARAMETERS

Parameter	Description	Min.	Max.	Units
t_{VR}	Supply voltage (V_{DDIO}, $V_{DDA_3.3}$) rise time	300	—	µs
t_{SR}	Stable supply voltage (V_{DDIO}, $V_{DDA_3.3}$) to reset high	10	—	ms
t_{CS}	Configuration setup time	5	—	ns
t_{CH}	Configuration hold time	5	—	ns
t_{RC}	Reset to strap-in pin output	6	—	ns

The supply voltage (V_{DDIO} and $V_{DDA_3.3}$) power-up waveform should be monotonic. The 300 µs minimum rise time is from 10% to 90%.

For warm reset, the reset (RST#) pin should be asserted low for a minimum of 500 µs. The strap-in pin values are read and updated at the de-assertion of reset.

After the de-assertion of reset, wait a minimum of 100 µs before starting programming on the MIIM (MDC/MDIO) interface.

Downloaded from Arrow.com.

7.10 Reset Circuit

Figure 7-11 shows a reset circuit recommended for powering up the KSZ8081MNX/RNB if reset is triggered by the power supply.

FIGURE 7-11: RECOMMENDED RESET CIRCUIT

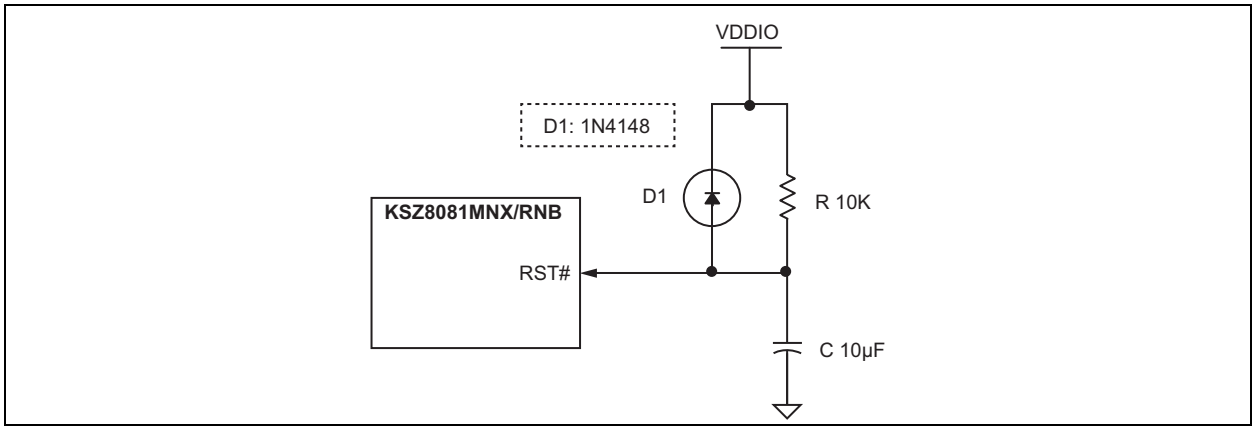

Figure 7-12 Shows a reset circuit recommended for applications where reset is driven by another device (for example, the CPU or an FPGA). The reset out RST_OUT_n from CPU/FPGA provides the warm reset after power up reset. D2 is used if using different VDDIO between the switch and CPU/FPGA, otherwise, the different VDDIO will fight each other. If different VDDIO have to use in a special case, a low VF (<0.3V) diode is required (For example, VISHAY's BAT54, MSS1P2L and so on), or a level shifter device can be used too. If Ethernet device and CPU/FPGA use same VDDIO voltage, D2 can be removed to connect both devices directly. Usually, Ethernet device and CPU/FPGA should use same VDDIO voltage.

FIGURE 7-12: RECOMMENDED RESET CIRCUIT FOR INTERFACING WITH CPU/FPGA RESET OUTPUT

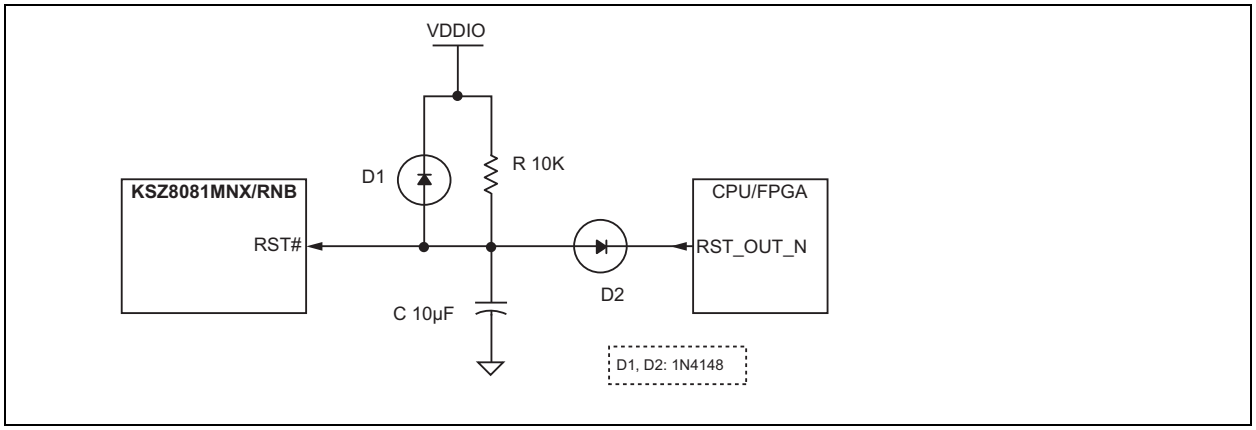

© 2016-2017 Microchip Technology Inc.

Downloaded from Arrow.com.

7.11 Reference Circuits – LED Strap-In Pins

The pull-up, float, and pull-down reference circuits for the LED1/SPEED and LED0/NWAYEN strapping pins are shown in Figure 7-13 for 3.3V and 2.5V VDDIO.

FIGURE 7-13: REFERENCE CIRCUITS FOR LED STRAPPING PINS

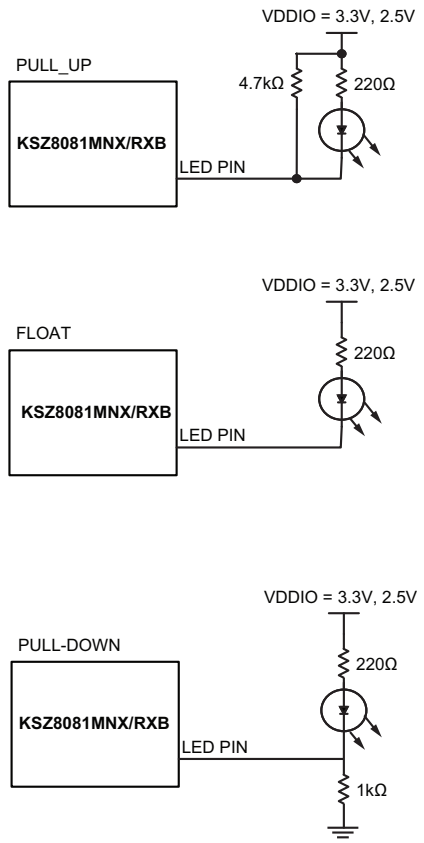

For using 1.8V VDDIO, should select parts with low 1.8V operation voltage and forwarding current IF about 2 mA LED indicator. It is okay to use internal pull-up or external pull-up resistor for the LED pin pull-up strap function, and use an external 0.75 kΩ to 1 kΩ pull-down resistor for the LED pin pull-down strap function.

Note: If using RJ45 jacks with integrated LEDs and 1.8V VDDIO, a level shifting is required from LED 3.3V to 1.8V. For example, use a bipolar transistor or a level shift device.

Downloaded from Arrow.com.

7.12 Reference Clock – Connection and Selection

A crystal or external clock source, such as an oscillator, is used to provide the reference clock for the KSZ8081MNX/RNB. For the KSZ8081MNX in all operating modes and for the KSZ8081RNB in RMII – 25 MHz Clock Mode, the reference clock is 25 MHz. The reference clock connections to XI (Pin 9) and XO (Pin 8), and the reference clock selection criteria, are provided in Figure 7-14 and Table 7-11.

FIGURE 7-14: 25 MHZ CRYSTAL/OSCILLATOR REFERENCE CLOCK CONNECTION

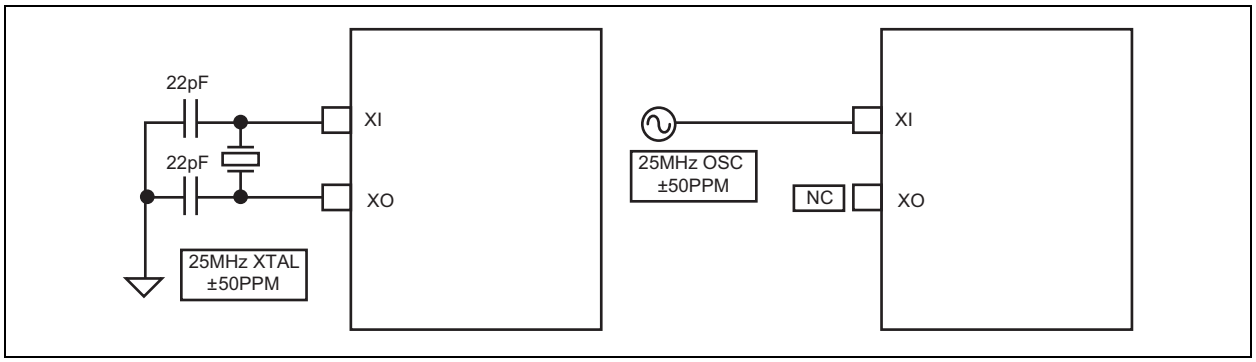

TABLE 7-11: 25 MHZ CRYSTAL/REFERENCE CLOCK SELECTION CRITERIA

Characteristics	Value	Units
Frequency	25	MHz
Frequency tolerance (max) (Note 7-1)	±50	ppm
Crystal series resistance (typ)	40	Ω
Crystal load capacitance (typ)	22	pF

Note 7-1 ±60 ppm for overtemperature crystal.

For the KSZ8081RNB in RMII – 50 MHz clock mode, the reference clock is 50 MHz. The reference clock connections to XI (Pin 9), and the reference clock selection criteria are provided in Figure 7-15 and Table 7-12.

FIGURE 7-15: 50 MHZ OSCILLATOR REFERENCE CLOCK CONNECTION

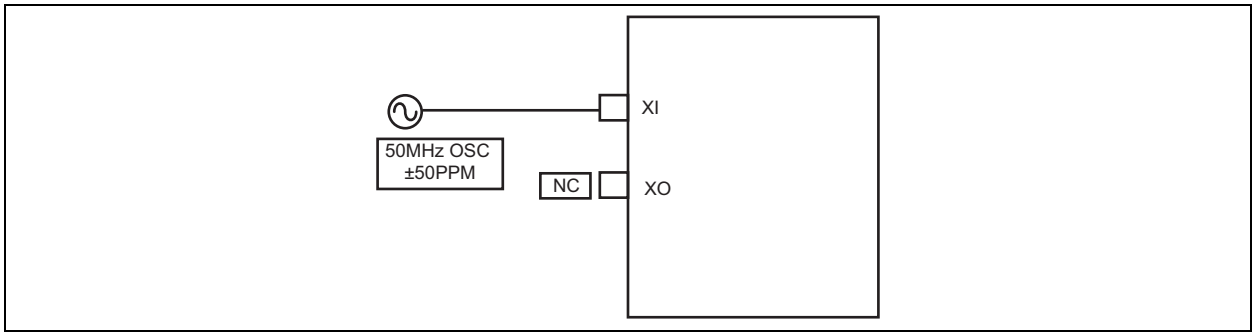

TABLE 7-12: 50 MHZ OSCILLATOR/REFERENCE CLOCK SELECTION CRITERIA

Characteristics	Value	Units
Frequency	50	MHz
Frequency tolerance (maximum)	±50	ppm

© 2016-2017 Microchip Technology Inc.

Downloaded from Arrow.com.

7.13 Magnetic – Connection and Selection

The KSZ8081MNX/RNB design incorporates voltage-mode transmit drivers and on-chip terminations.

With the voltage-mode implementation, the transmit drivers supply the common-mode voltages to the two differential pairs. Therefore, the two transformer center tap pins on the KSZ8081MNX/RNB side should not be connected to any power supply source on the board; instead, the center tap pins should be separated from one another and connected through separate 0.1 µF common-mode capacitors to ground. Separation is required because the common-mode voltage is different between transmitting and receiving differential pairs.

Figure 7-16 shows the typical magnetic interface circuit for the KSZ8081MNX/RNB.

FIGURE 7-16: TYPICAL MAGNETIC INTERFACE CIRCUIT

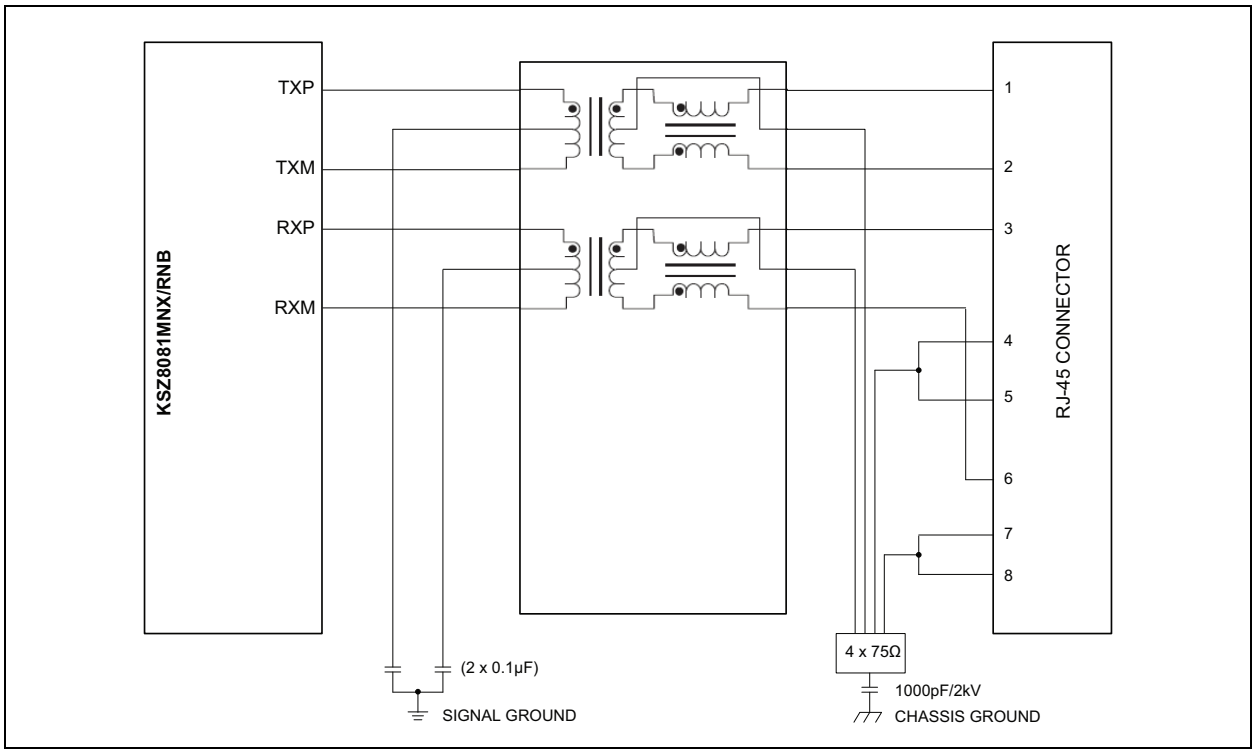

Table 7-13 lists recommended magnetic characteristics.

TABLE 7-13: MAGNETICS SELECTION CRITERIA

Parameter	Value	Test Condition
Turns ratio	1 CT : 1 CT	—
Open-circuit inductance (minimum)	350 µH	100 mV, 100 kHz, 8 mA
Insertion loss (typical)	–1.1 dB	100 kHz to 100 MHz
HIPOT (minimum)	1500 V_{rms}	—

Downloaded from Arrow.com.

Table 7-14 is a list of compatible single-port magnetics with separated transformer center tap pins on the PHY chip side that can be used with the KSZ8081MNX/RNB.

TABLE 7-14: COMPATIBLE SINGLE-PORT 10/100 MAGNETICS

Manufacturer	Part Number	Temperature Range	Magnetic + RJ-45
Bel Fuse	S558-5999-U7	0°C to 70°C	No
Bel Fuse	SI-46001-F	0°C to 70°C	Yes
Bel Fuse	SI-50170-F	0°C to 70°C	Yes
Delta	LF8505	0°C to 70°C	No
HALO	HFJ11-2450E	0°C to 70°C	Yes
HALO	TG110-E055N5	–40°C to 85°C	No
LANKom	LF-H41S-1	0°C to 70°C	No
Pulse	H1102	0°C to 70°C	No
Pulse	H1260	0°C to 70°C	No
Pulse	HX1188	–40°C to 85°C	No
Pulse	J00-0014	0°C to 70°C	Yes
Pulse	JX0011D21NL	–40°C to 85°C	Yes
TDK	TLA-6T718A	0°C to 70°C	Yes
Transpower	HB726	0°C to 70°C	No
Wurth/Midcom	000-7090-37R-LF1	–40°C to 85°C	No

© 2016-2017 Microchip Technology Inc.

Downloaded from Arrow.com.

8.0 PACKAGE OUTLINE

FIGURE 8-1: 32-LEAD QFN 5 MM × 5 MM PACKAGE AND RECOMMENDED PCB LAND PATTERN

TITLE
32 LEAD QFN 5x5mm PACKAGE OUTLINE & RECOMMENDED LAND PATTERN

DRAWING #	QFN55-32LD-PL-5	UNIT	MM

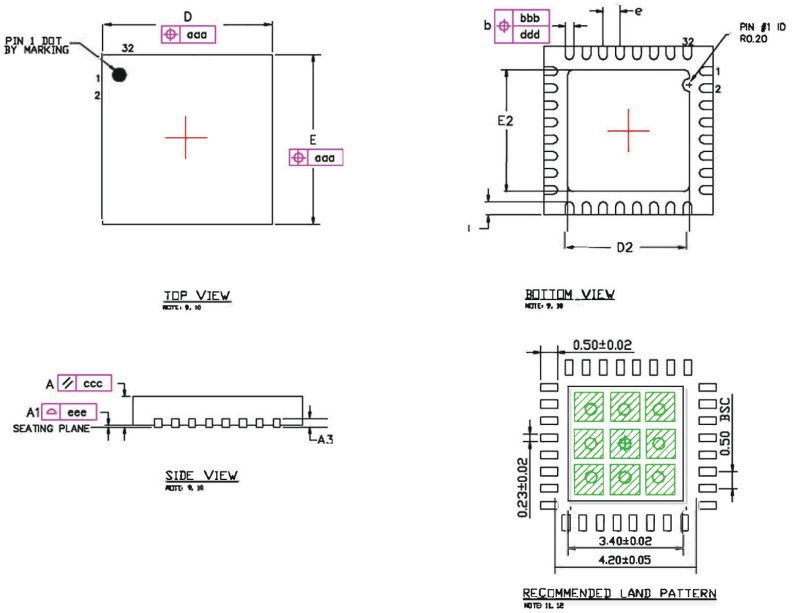

SYMBOL	DIMENSION IN mm MIN	NOM	MAX
A	0.80	0.85	1.00
A1	0.00	0.02	0.05
A3	0.20 (REF)		
D	5.00 BSC		
D2	3.00	3.10	3.20
E	5.00 BSC		
E2	3.00	3.10	3.20
L	0.35	0.40	0.45

	b (mm)			e (mm)		
N	MIN	NOM	MAX	MIN	NOM	MAX
32	0.18	0.25	0.30	0.50 BSC		

TOLERANCE OF FORM AND POSITION	
aaa	0.15
bbb	0.10
ccc	0.10
ddd	0.05
eee	0.08

NOTE:
1. REFER TO JEDEC STANDARD MO-220 VHHD-2.
2. DIMENSION 'b' APPLIES TO METALIZED TERMINAL AND IS MEASURED BETWEEN 0.15mm TO 0.30mm FROM THE TERMINAL TIP.
3. 'aaa' THE BILATERAL PROFILE TOLERANCE THAT CONTROLS THE POSITION OF THE PLASTIC BODY SIDES. THE CENTERS OF THE PROFILE ZONES ARE DEFINED BY THE BASIC DIMENSIONS 'D' AND 'E'.
4. 'bbb' THE TOLERANCE THAT CONTROLS THE POSITION OF THE ENTIRE TERMINAL PATTERN WITH RESPECT TO DATUM'S A AND B. THE CENTER OF THE TOLERANCE ZONE OF EACH TERMINAL IS DEFINED BY THE BASIC DIMENSION 'e' AS RELATED TO DATUM A AND B.
5. 'ccc' THE TOLERANCE LOCATED PARALLEL TO THE SEATING PLANE IN WHICH THE TOP SURFACE OF THE PACKAGE MUST BE LOCATED.
6. 'ddd' THE TOLERANCE THAT CONTROLS THE POSITION OF THE TERMINALS TO EACH OTHER. THE CENTERS OF THE PROFILE ZONES ARE DEFINED BY BASIC DIMENSION 'e'.
7. 'eee' THE UNILATERAL TOLERANCE LOCATED ABOVE THE SEATING PLANE WHEREIN THE BOTTOM SURFACE OF THE TERMINALS MUST BE LOCATED.
8. THE TOLERANCE THAT CONTROLS THE POSITION OF THE EXPOSED METAL HEAT FEATURE. THE CENTER OF THE TOLERANCE ZONE WILL BE THE DATUM'S DEFINED BY THE CENTERLINES OF THE PACKAGE BODY.
9. MAX PACKAGE WARPAGE IS 0.05 MM.
10. PIN #1 IS ON TOP WILL BE LASER MARKED.
11. RED CIRCLE IN LAND PATTERN INDICATE THERMAL VIA. SIZE SHOULD BE 0.30-0.35M IN DIAMETER AND SHOULD BE CONNECTED TO GND FOR MAX THERMAL PERFORMANCE.
12. GREEN RECTANGLES (SHADED AREA) indicate SOLDER STENCIL OPENING ON EXPOSED PAD AREA. SIZE SHOULD BE 0.87x0.87 MM IN SIZE, 1.07 MM PITCH.
13. THIS DOCUMENT IS FOR AUTOMOTIVE PRODUCT USE ONLY.

Downloaded from Arrow.com.

APPENDIX A: DATA SHEET REVISION HISTORY

TABLE A-1: REVISION HISTORY

Revision	Section/Figure/Entry	Correction
DS000002202B (03-28-17)	Table 2-2, "Strap-In Options – KSZ8081MNX"	Updated info for pins 18, 28, and 29.
	Figure 8-1	Updated image.
	Product Identification System	Corrected PIS code matrix.
DS00002202A (10-27-16)	All	Converted Micrel document KSZ8081MNX/RNB to Microchip DS00002202A. Minor text edits throughout.

© 2016-2017 Microchip Technology Inc.

Downloaded from Arrow.com.

THE MICROCHIP WEB SITE

Microchip provides online support via our WWW site at www.microchip.com. This web site is used as a means to make files and information easily available to customers. Accessible by using your favorite Internet browser, the web site contains the following information:

- **Product Support** – Data sheets and errata, application notes and sample programs, design resources, user's guides and hardware support documents, latest software releases and archived software
- **General Technical Support** – Frequently Asked Questions (FAQ), technical support requests, online discussion groups, Microchip consultant program member listing
- **Business of Microchip** – Product selector and ordering guides, latest Microchip press releases, listing of seminars and events, listings of Microchip sales offices, distributors and factory representatives

CUSTOMER CHANGE NOTIFICATION SERVICE

Microchip's customer notification service helps keep customers current on Microchip products. Subscribers will receive e-mail notification whenever there are changes, updates, revisions or errata related to a specified product family or development tool of interest.

To register, access the Microchip web site at www.microchip.com. Under "Support", click on "Customer Change Notification" and follow the registration instructions.

CUSTOMER SUPPORT

Users of Microchip products can receive assistance through several channels:

- Distributor or Representative
- Local Sales Office
- Field Application Engineer (FAE)
- Technical Support

Customers should contact their distributor, representative or Field Application Engineer (FAE) for support. Local sales offices are also available to help customers. A listing of sales offices and locations is included in the back of this document.

Technical support is available through the web site at: http://microchip.com/support

Downloaded from Arrow.com.

PRODUCT IDENTIFICATION SYSTEM

To order or obtain information, e.g., on pricing or delivery, refer to the factory or the listed sales office.

PART NO.	X	X	X	X
Device	Interface	Package Option	Special Attribute	Temperature Range

Device:	KSZ8081 - 10BASE-T/100BASE-TX Physical Layer Transceiver		
Interface:	M	=	MII
	R	=	RMII
Package Option:	N	=	32-pin QFN
Special Attribute:	X	=	None
	B	=	REF_CLK output (power-up default)
Temperature Range:	IA	=	Industrial (–40°C to +85°C)
	CA	=	Commercial (0°C to +70°C)

Examples:

a) KSZ8081MNXCA
10BASE-T/100BASE-TX Physical Layer Transceiver, MII, 32-pin QFN, Commercial Temperature.

b) KSZ8081MNXIA
10BASE-T/100BASE-TX Physical Layer Transceiver, MII, 32-pin QFN, Industrial Temperature.

c) KSZ8081RNBCA
10BASE-T/100BASE-TX Physical Layer Transceiver, RMII, 32-pin QFN, REF_CLK output (power-up default), Commercial Temperature.

d) KSZ8081RNBIA
10BASE-T/100BASE-TX Physical Layer Transceiver, RMII, 32-pin QFN, REF_CLK output (power-up default), Industrial Temperature.

© 2016-2017 Microchip Technology Inc.

Downloaded from Arrow.com.

Note the following details of the code protection feature on Microchip devices:

- Microchip products meet the specification contained in their particular Microchip Data Sheet.
- Microchip believes that its family of products is one of the most secure families of its kind on the market today, when used in the intended manner and under normal conditions.
- There are dishonest and possibly illegal methods used to breach the code protection feature. All of these methods, to our knowledge, require using the Microchip products in a manner outside the operating specifications contained in Microchip's Data Sheets. Most likely, the person doing so is engaged in theft of intellectual property.
- Microchip is willing to work with the customer who is concerned about the integrity of their code.
- Neither Microchip nor any other semiconductor manufacturer can guarantee the security of their code. Code protection does not mean that we are guaranteeing the product as "unbreakable."

Code protection is constantly evolving. We at Microchip are committed to continuously improving the code protection features of our products. Attempts to break Microchip's code protection feature may be a violation of the Digital Millennium Copyright Act. If such acts allow unauthorized access to your software or other copyrighted work, you may have a right to sue for relief under that Act.

Information contained in this publication regarding device applications and the like is provided only for your convenience and may be superseded by updates. It is your responsibility to ensure that your application meets with your specifications. MICROCHIP MAKES NO REPRESENTATIONS OR WARRANTIES OF ANY KIND WHETHER EXPRESS OR IMPLIED, WRITTEN OR ORAL, STATUTORY OR OTHERWISE, RELATED TO THE INFORMATION, INCLUDING BUT NOT LIMITED TO ITS CONDITION, QUALITY, PERFORMANCE, MERCHANTABILITY OR FITNESS FOR PURPOSE**.** Microchip disclaims all liability arising from this information and its use. Use of Microchip devices in life support and/or safety applications is entirely at the buyer's risk, and the buyer agrees to defend, indemnify and hold harmless Microchip from any and all damages, claims, suits, or expenses resulting from such use. No licenses are conveyed, implicitly or otherwise, under any Microchip intellectual property rights unless otherwise stated.

Trademarks

The Microchip name and logo, the Microchip logo, AnyRate, AVR, AVR logo, AVR Freaks, BeaconThings, BitCloud, CryptoMemory, CryptoRF, dsPIC, FlashFlex, flexPWR, Heldo, JukeBlox, KEELOQ, KEELOQ logo, Kleer, LANCheck, LINK MD, maXStylus, maXTouch, MediaLB, megaAVR, MOST, MOST logo, MPLAB, OptoLyzer, PIC, picoPower, PICSTART, PIC32 logo, Prochip Designer, QTouch, RightTouch, SAM-BA, SpyNIC, SST, SST Logo, SuperFlash, tinyAVR, UNI/O, and XMEGA are registered trademarks of Microchip Technology Incorporated in the U.S.A. and other countries.

ClockWorks, The Embedded Control Solutions Company, EtherSynch, Hyper Speed Control, HyperLight Load, IntelliMOS, mTouch, Precision Edge, and Quiet-Wire are registered trademarks of Microchip Technology Incorporated in the U.S.A.

Adjacent Key Suppression, AKS, Analog-for-the-Digital Age, Any Capacitor, AnyIn, AnyOut, BodyCom, chipKIT, chipKIT logo, CodeGuard, CryptoAuthentication, CryptoCompanion, CryptoController, dsPICDEM, dsPICDEM.net, Dynamic Average Matching, DAM, ECAN, EtherGREEN, In-Circuit Serial Programming, ICSP, Inter-Chip Connectivity, JitterBlocker, KleerNet, KleerNet logo, Mindi, MiWi, motorBench, MPASM, MPF, MPLAB Certified logo, MPLIB, MPLINK, MultiTRAK, NetDetach, Omniscient Code Generation, PICDEM, PICDEM.net, PICkit, PICtail, PureSilicon, QMatrix, RightTouch logo, REAL ICE, Ripple Blocker, SAM-ICE, Serial Quad I/O, SMART-I.S., SQI, SuperSwitcher, SuperSwitcher II, Total Endurance, TSHARC, USBCheck, VariSense, ViewSpan, WiperLock, Wireless DNA, and ZENA are trademarks of Microchip Technology Incorporated in the U.S.A. and other countries.

SQTP is a service mark of Microchip Technology Incorporated in the U.S.A.

Silicon Storage Technology is a registered trademark of Microchip Technology Inc. in other countries.

GestIC is a registered trademark of Microchip Technology Germany II GmbH & Co. KG, a subsidiary of Microchip Technology Inc., in other countries.

All other trademarks mentioned herein are property of their respective companies.

© 2016-2017, Microchip Technology Incorporated, All Rights Reserved.

ISBN: 978-1-5224-1528-2

QUALITY MANAGEMENT SYSTEM
CERTIFIED BY DNV
═ ISO/TS 16949 ═

Microchip received ISO/TS-16949:2009 certification for its worldwide headquarters, design and wafer fabrication facilities in Chandler and Tempe, Arizona; Gresham, Oregon and design centers in California and India. The Company's quality system processes and procedures are for its PIC® MCUs and dsPIC® DSCs, KEELOQ® code hopping devices, Serial EEPROMs, microperipherals, nonvolatile memory and analog products. In addition, Microchip's quality system for the design and manufacture of development systems is ISO 9001:2000 certified.

Downloaded from Arrow.com.

Worldwide Sales and Service

AMERICAS

Corporate Office
2355 West Chandler Blvd.
Chandler, AZ 85224-6199
Tel: 480-792-7200
Fax: 480-792-7277
Technical Support:
http://www.microchip.com/support
Web Address:
www.microchip.com

Atlanta
Duluth, GA
Tel: 678-957-9614
Fax: 678-957-1455

Austin, TX
Tel: 512-257-3370

Boston
Westborough, MA
Tel: 774-760-0087
Fax: 774-760-0088

Chicago
Itasca, IL
Tel: 630-285-0071
Fax: 630-285-0075

Dallas
Addison, TX
Tel: 972-818-7423
Fax: 972-818-2924

Detroit
Novi, MI
Tel: 248-848-4000

Houston, TX
Tel: 281-894-5983

Indianapolis
Noblesville, IN
Tel: 317-773-8323
Fax: 317-773-5453
Tel: 317-536-2380

Los Angeles
Mission Viejo, CA
Tel: 949-462-9523
Fax: 949-462-9608
Tel: 951-273-7800

Raleigh, NC
Tel: 919-844-7510

New York, NY
Tel: 631-435-6000

San Jose, CA
Tel: 408-735-9110
Tel: 408-436-4270

Canada - Toronto
Tel: 905-695-1980
Fax: 905-695-2078

ASIA/PACIFIC

Asia Pacific Office
Suites 3707-14, 37th Floor
Tower 6, The Gateway
Harbour City, Kowloon

Hong Kong
Tel: 852-2943-5100
Fax: 852-2401-3431

Australia - Sydney
Tel: 61-2-9868-6733
Fax: 61-2-9868-6755

China - Beijing
Tel: 86-10-8569-7000
Fax: 86-10-8528-2104

China - Chengdu
Tel: 86-28-8665-5511
Fax: 86-28-8665-7889

China - Chongqing
Tel: 86-23-8980-9588
Fax: 86-23-8980-9500

China - Dongguan
Tel: 86-769-8702-9880

China - Guangzhou
Tel: 86-20-8755-8029

China - Hangzhou
Tel: 86-571-8792-8115
Fax: 86-571-8792-8116

China - Hong Kong SAR
Tel: 852-2943-5100
Fax: 852-2401-3431

China - Nanjing
Tel: 86-25-8473-2460
Fax: 86-25-8473-2470

China - Qingdao
Tel: 86-532-8502-7355
Fax: 86-532-8502-7205

China - Shanghai
Tel: 86-21-3326-8000
Fax: 86-21-3326-8021

China - Shenyang
Tel: 86-24-2334-2829
Fax: 86-24-2334-2393

China - Shenzhen
Tel: 86-755-8864-2200
Fax: 86-755-8203-1760

China - Wuhan
Tel: 86-27-5980-5300
Fax: 86-27-5980-5118

China - Xian
Tel: 86-29-8833-7252
Fax: 86-29-8833-7256

ASIA/PACIFIC

China - Xiamen
Tel: 86-592-2388138
Fax: 86-592-2388130

China - Zhuhai
Tel: 86-756-3210040
Fax: 86-756-3210049

India - Bangalore
Tel: 91-80-3090-4444
Fax: 91-80-3090-4123

India - New Delhi
Tel: 91-11-4160-8631
Fax: 91-11-4160-8632

India - Pune
Tel: 91-20-3019-1500

Japan - Osaka
Tel: 81-6-6152-7160
Fax: 81-6-6152-9310

Japan - Tokyo
Tel: 81-3-6880- 3770
Fax: 81-3-6880-3771

Korea - Daegu
Tel: 82-53-744-4301
Fax: 82-53-744-4302

Korea - Seoul
Tel: 82-2-554-7200
Fax: 82-2-558-5932 or
82-2-558-5934

Malaysia - Kuala Lumpur
Tel: 60-3-6201-9857
Fax: 60-3-6201-9859

Malaysia - Penang
Tel: 60-4-227-8870
Fax: 60-4-227-4068

Philippines - Manila
Tel: 63-2-634-9065
Fax: 63-2-634-9069

Singapore
Tel: 65-6334-8870
Fax: 65-6334-8850

Taiwan - Hsin Chu
Tel: 886-3-5778-366
Fax: 886-3-5770-955

Taiwan - Kaohsiung
Tel: 886-7-213-7830

Taiwan - Taipei
Tel: 886-2-2508-8600
Fax: 886-2-2508-0102

Thailand - Bangkok
Tel: 66-2-694-1351
Fax: 66-2-694-1350

EUROPE

Austria - Wels
Tel: 43-7242-2244-39
Fax: 43-7242-2244-393

Denmark - Copenhagen
Tel: 45-4450-2828
Fax: 45-4485-2829

Finland - Espoo
Tel: 358-9-4520-820

France - Paris
Tel: 33-1-69-53-63-20
Fax: 33-1-69-30-90-79

France - Saint Cloud
Tel: 33-1-30-60-70-00

Germany - Garching
Tel: 49-8931-9700

Germany - Haan
Tel: 49-2129-3766400

Germany - Heilbronn
Tel: 49-7131-67-3636

Germany - Karlsruhe
Tel: 49-721-625370

Germany - Munich
Tel: 49-89-627-144-0
Fax: 49-89-627-144-44

Germany - Rosenheim
Tel: 49-8031-354-560

Israel - Ra'anana
Tel: 972-9-744-7705

Italy - Milan
Tel: 39-0331-742611
Fax: 39-0331-466781

Italy - Padova
Tel: 39-049-7625286

Netherlands - Drunen
Tel: 31-416-690399
Fax: 31-416-690340

Norway - Trondheim
Tel: 47-7289-7561

Poland - Warsaw
Tel: 48-22-3325737

Romania - Bucharest
Tel: 40-21-407-87-50

Spain - Madrid
Tel: 34-91-708-08-90
Fax: 34-91-708-08-91

Sweden - Gothenberg
Tel: 46-31-704-60-40

Sweden - Stockholm
Tel: 46-8-5090-4654

UK - Wokingham
Tel: 44-118-921-5800
Fax: 44-118-921-5820

© 2016 Microchip Technology Inc.

Downloaded from Arrow.com.