Material:Brass
Plating: Au over Ni

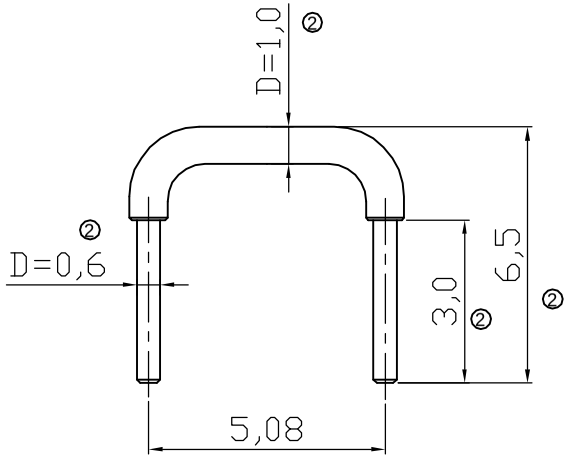

RoHS compliant

Scale	1:1						Date	Name	Customer-No.
TOLERANCE						Drawn	09.09.2009	Dean	
X.	±X					Approved	09.09.2009	Hellwig	ASSMANN WSW-No. AB 8
X.X	±X								
X.XX	±X								Drawing-No.
DIM	TOL	②	Change of dimension	28.10.2014	A. Plate				ASS 0785 CO rev02
X.°	±X°								
X.X°	±X°	①	Drawn	09.09.2009	Dean				
Angle	TOL	Id.	Modification	Date	Name				Replace / Sheet

ASSMANN WSW components

Downloaded from Arrow.com.