Thank you for using version 2025.4.1216.462 of Telerik Document Processing Libraries. Access to the latest updates and support requires a valid license. Renew your license and download a new license key. Learn more abo
Telerik Document Processing Libraries licensing https://prgress.co/3PwQMut

Trimmers

Product: JR200

Product Line General Specifications

Product Line	Insulation Resistance	Operating Temperature	Shock	Vibration	Recommended Tuning Tool metal	Recommended Tuning Tool Ceramic
JR - Ceramic Trimmer	10^4 megaohms	-40°C to +85°C				

Min Capacitance	4.5
Max Capacitance	20
DC Working Voltage	125
DC Withstanding Voltage	220
Temperature Coefficient	-1500 ± 1000
Q min at 1 MHz	200
Q min at 100MHz	
Q min at defined frequency	
Self Resonant Frequency	1.15 GHz
Torque	0.6 in-oz max
Mount Type	Vertical, SMT
Number of Turns	
Seal	No
Rotational Life	Turns



Example of "JR - Ceramic Trimmer"

Packaging	All parts funished on 12mm tape and reel. 1,000 pc's per reel.
MIL Designation	
Marking Color	Red
Is Non Mag	No

Knowles Precision Devices - Sales
Europe: KPD-Europe-sales@knowles.com
Asia: KPD-Asia-sales@knowles.com
USA: KPD-NA-sales@knowles.com
www.knowlescapacitors.com

This datasheet is for a standard item and is confirmed valid on the date generated, the latest published data for this part may differ and is available at http://www.knowlescapacitors.com or by contacting us.

© The information contained on this drawing is confidential and may not be copied in whole or part in any form or disclosed to a third party without the consent of Knowles and any customer mentioned within this specification.

Data is correct to the best of our knowledge, errors and omissions excepted.

Date: Friday, November 06, 2026
20261106 002523308UTC

Downloaded from Arrow.com.

CONFIGURATION TABLE (SEE NOTE 6.1)						
PART NUMBER	C MIN [pF]	C MAX [pF]	TC [PPM/°C]	Q MIN. @ 1 MHz	MARKING COLOR	ALTERNATE COLOR
JR030	1.5	3.0 +50% / -0%	0 ± 200	500	BLACK	BLACK & GREEN
JR060	2.0	6.0 +50% / -0%	0 ± 300	500	BLUE	BLUE & GREEN
JR080	3.0	8.0 +50% / -0%	-750 ± 500	500	VIOLET	VIOLET & GREEN
JR100	2.0	10.0 +100% / -0%	0 ± 300	500	WHITE	WHITE & GREEN
JR150	3.0	15.0 +100% / -0%	0 ± 500	500	PINK	PINK & GREEN
JR200	4.5	20.0 +100% / -0%	0 ± 500	500	RED	RED & GREEN
JR300	5.5	30.0 +100% / -0%	-1500 ± 1000	200	ORANGE	ORANGE & GREEN
JR400	8.0	40.0 +100% / -0%	-1500 ± 1000	200	YELLOW	GREEN OR YELLOW & GREEN
JR500	8.0	50.0 +100% / -0%	-1500 ± 1000	200	GREEN	GREEN & GREEN

REVISION HISTORY					
ECO#	ZONE	REV	DESCRIPTION	DRAWN	APPROVED
		-	INITIAL ACAD RELEASE	VK|02/10/94	DD
1607	ALL	A	SPECS MATCHED TO CURRENT SALES BROCHURES (NOTES 3.2 & 5.1)	EC|05/15/17	

NOTES:

1. INTERPRET DRAWING PER ANSI Y14.5M-1994.
2. **[ALTERNATE DIMENSIONS]** ARE IN MILIMETERS.
3. ELECTRICAL SPECIFICATIONS:
   - 3.1. CAPACITANCE RANGE: *SEE CONFIGURATION TABLE*.
   - 3.2. DC WORKING VOLTAGE AT MAX. RATED CAPACITANCE: 125 [VOLTS].
   - 3.3. DC WITHSTANDING VOLTAGE AT MAX RATED CAPACITANCE: 220 [VOLTS].
   - 3.4. Q FACTOR AT 1 [MHz] AND MAX RATED CAPACITANCE: *SEE CONFIGURATION TABLE*.
   - 3.5. INSULATION RESISTANCE: 10^4 [MEGAOHMS] AT 25°C.
   - 3.6. TEMPERATURE COEFFICIENT: *SEE CONFIGURATION TABLE*.
   - 3.7. SELF RESONANT FREQUENCY MEASURED AT MAX RATED CAPACITANCE
4. MECHANICAL SPECIFICATIONS:
   - 4.1. TUNING TORQUE: 0.14 [in·oz] TO 1.00 [in·oz].
   - 4.2. ALL PARTS FURNISHED ON 12 [mm] TAPE AND REEL; 1000 PIECES PER REEL.
5. ENVIRONMENTAL:
   - 5.1. OPERATING TEMPERATURE: -40°C TO +85°C.
   - 5.2. RoHS COMPLAINT.
6. MISCELLANEOUS:
   - 6.1. IN ORDER TO PROVIDE THE HIGHEST LEVELS OF SERVICE, KNOWLES RESERVES THE RIGHT TO SUPPLY EQUIVALENT PRODUCTS WHERE SPECIFICATIONS ARE EQUIVALENT OR ENHANCED. THIS INCLUDES SUBSTITUTION OF JR500 TO JR400 AND HV SUFFIX FOR STANDARDS PARTS.

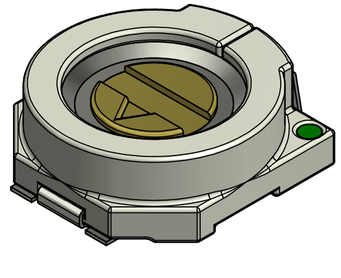

ISO VIEW
SCALE 20 : 1

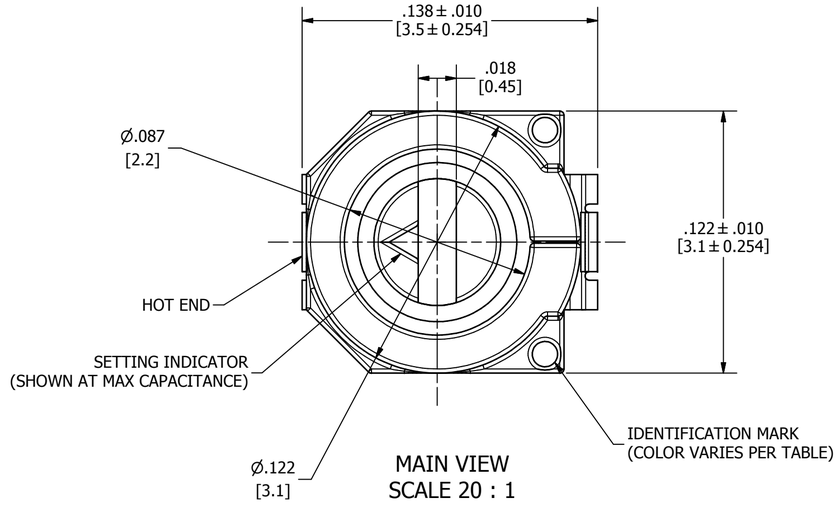

MAIN VIEW
SCALE 20 : 1

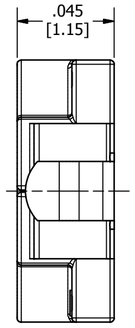

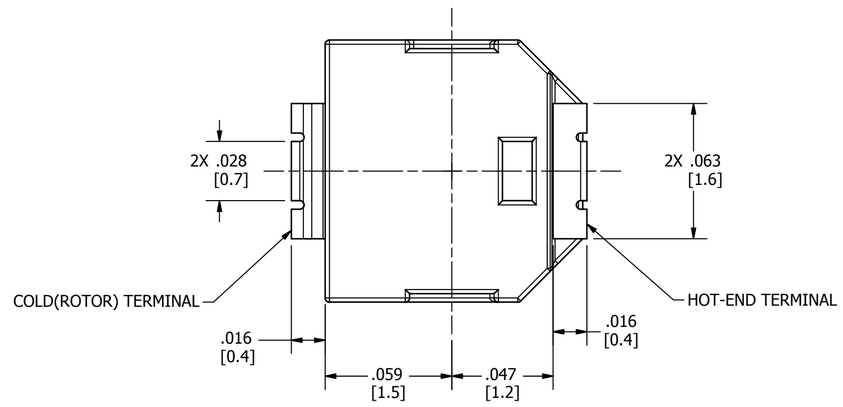

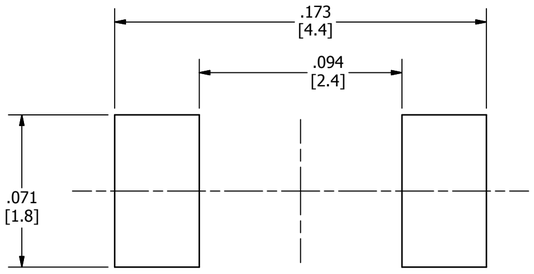

SUGGESTED FOOTPRINT
SOLDER PASTE THICKNESS OF 0.15 [mm] RECOMMENDED
SCALE 20 : 1

MATERIAL: N/A	DRAWN: E. CONTRERAS	5/15/2017	knowles — DLI•Johanson MFG•Novacap•Syfer•Voltronics
FINISH: N/A	CHECKED		VOLTRONICS — THE TRIMMER CAPACITOR COMPANY, 2777 ROUTE 20 EAST, CAZENOVIA, NEW YORK 13035
TOLERANCES: .XX ± .XXX ±.008 .XXXX ± X°±1° X.X°±0.1°	QUALITY ASSURANCE		OUTLINE DRAWING FOR JRxxx SERIES
SURFACE FINISH: 32	MANUFACTURING		
3RD ANGLE PROJECTION	ENGINEERING		SIZE: C · CAGE CODE: 18736 · PART NUMBER: JRxxx · REV: A
	CUSTOMER PART NUMBER		SCALE: PER VIEW · DWG NO.: V-7586 · SHEET 1 OF 2
	INVENTOR 2014 GENERATED DWG		

Thank you for using version 2025.4.12216.462 of Telerik Document Processing Libraries. Access to the latest updates and support requires a valid license. Renew your license and download a new license key. Learn more about Telerik Document Processing Libraries licensing https://progress.co/3PvQMut

Downloaded from Arrow.com.

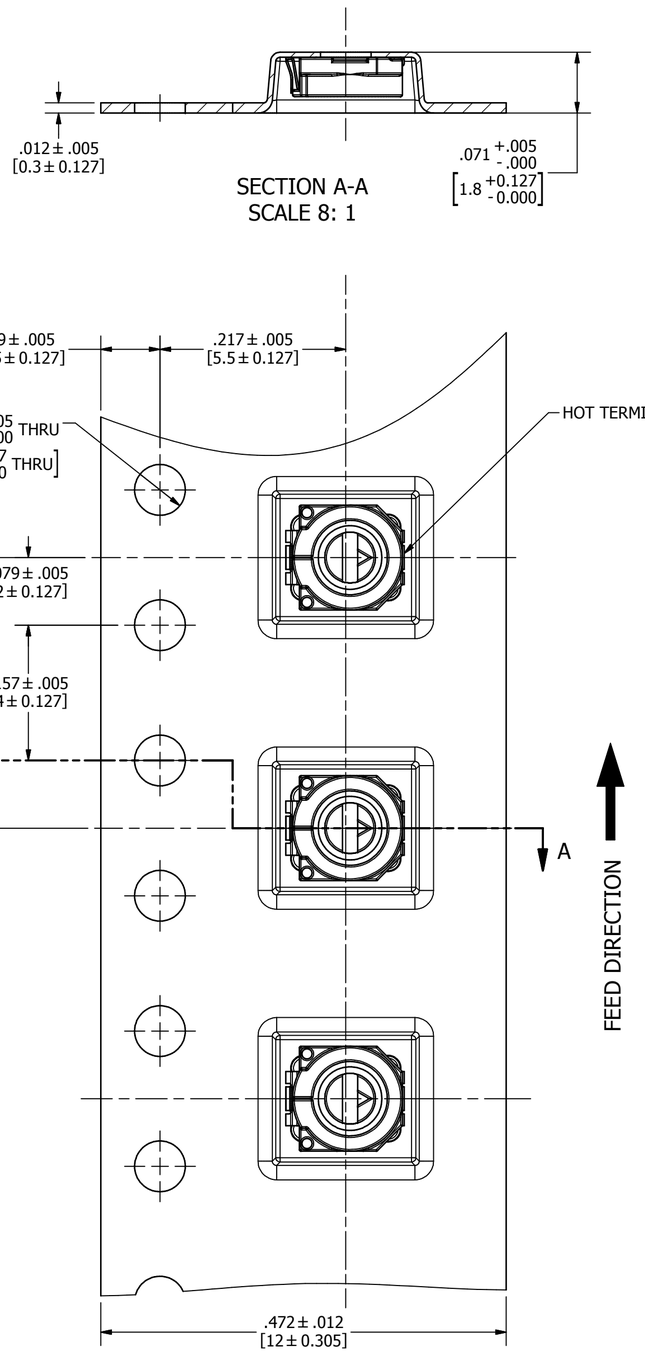

SECTION A-A
SCALE 8: 1

CARRIER TAPE DETAIL
SCALE 8: 1

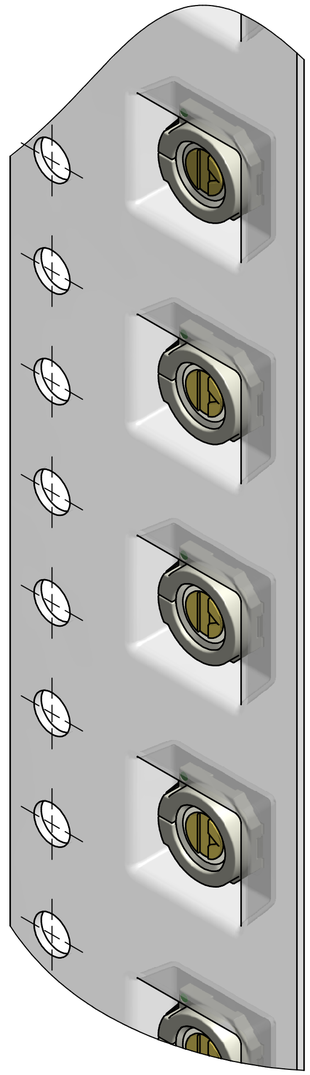

CARRIER TAPE
ISO VIEW
SCALE 8: 1

HANDLING/STORAGE PRECAUTIONS:

i.- DO NOT USE FLOW SOLDERING.
ii.- DO NOT APPLY SOLDER OR FLUX TO ANY PARTS BUT TERMINAL
iii.- WHEN USING SOLDERING IRON, THE SOLDERING IRON SHOULD NOT COME IN CONTACT WITH THE HOUSING OF THE CAPACITOR.
iv.- PLEASE REFER TO SOLDER RECOMMENDATIONS CHART.
v.- NO-CLEAN METHOD IS PREFERED OVER SOLVENT WASHING. EXPERIMENT WITH SAMPLES BEFORE WASHING BY SOLVENTS.
v.- DO NOT APPLY LOCKING SPRAY OR PAINT TO TRIMMER. ELECTRIC SPECIFICATIONS MAY BE AFFECTED ADVERSELY.
vi.- PRODUCT CONTAINS LUBRICATION OIL. LUBRICATION LEAKS WILL NOT AFFECT PRODUCT SOLDERABILITY.
vii.- USE OF CERAMIC SCREWDRIVERS IS RECOMMENDED FOR TUNING.
viii.- DO NOT APPLY AXIAL LOAD DURING TUNING IN EXCESS OF 0.3[lbf]//1.5[N].
ix.- KEEP PARTS OUT OF DIRECT SUNLIGHT EXPOSURE. STORE PARTS IN DUST-FREE ENVIRONMENT.

SOLDERING RECOMMENDATIONS

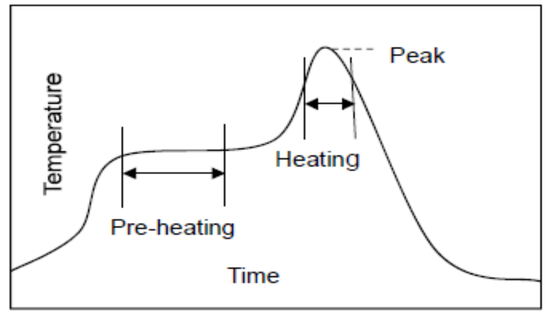

STANDARD LEAD-FREE SOLDERING PROFILE		
STAGE	SAC305 SOLDER	EUTECTIC SOLDER
PRE-HEATING	TEMPERATURE: 150[ºC] - 180[ºC] TIME: 60 - 120 SECONDS	TEMPERATURE: 120[ºC] - 150[ºC] TIME: 60 - 120 SECONDS
HEATING	TEMPERATURE: 220[ºC] MIN. TIME: 30 - 60 SECONDS	TEMPERATURE: 183[ºC] MIN. TIME: 30 - 60 SECONDS
PEAK HEAT	TEMPERATURE: 265[ºC] TIME: 3 SECONDS MAX	TEMPERATURE: 265[ºC] TIME: 3 SECONDS MAX
REFLOW CYCLES	2 TIMES MAX	2 TIMES MAX
SOLDERING IRON		
SPEC	TEMPERATURE 400[ºC] MAX TIME: 3 SECONDS MAX	

knowles
DLI • Novacap • Syfer • Voltronics

VOLTRONICS
THE TRIMMER CAPACITOR COMPANY
2250 NORTHWOOD DRIVE
SALISBURY, MARYLAND 21801

SIZE	CAGE CODE	PART NUMBER	REV
C	18736	JRxxx	A

SCALE	DWG NO.	SHEET 2 OF 2
PER VIEW	V-7586	

Downloaded from Arrow.com.

Thank you for using version 2025.4.1216.462 of Telerik Document Processing Libraries. Access to the latest updates and support requires a valid license. Renew your license and download a new license key. Learn more about Telerik Document Processing Libraries licensing https://progress.co/3PvQMut