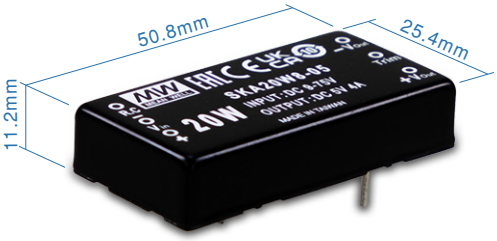

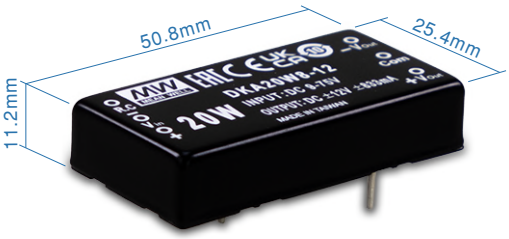

Features

- DIP 2"x1" package with industry standard pinout
- 8:1(9~75Vdc) ultra-wide input range
- Operating temperature range -40 ~ +90℃
- No minimum load required
- Comply to BS EN/EN55032 radiated Class A without additional components
- High efficiency up to 89%
- Protections: Short circuit (Continuous) / Overload / Over voltage / UVLO
- 3KVdc I/O isolation
- Remote ON/OFF control
- 3 years warranty

Applications

- Telecom/datacom system
- Wireless network
- Industrial control facility
- Instrument
- Analyzer
- Detector
- Data switch

GTIN CODE

MW Search: https://www.meanwell.com/serviceGTIN.aspx

Description

SKA20W8 and DKA20W8 series are 20W isolated and regulated module type DC-DC converter with DIP 2"x1" package. It features international standard pins, a high efficiency up to 89%, wide working temperature range -40~+90℃ , 3KVdc I/P-O/P isolation voltage, compliance to BS EN/EN55032 radiated Class A without additional components, continuous-mode short circuit, overload, over voltage, input under voltage protection etc. The models account for 9~75Vdc 8:1 ultra-wide input range, and various output voltage, 3.3V/5V/12V/15V/24V for single output and ±12V/±15V for dual outputs, which are suitable for all kinds of systems, Such as industrial control, telecommunication field, distributed power architecture, and so on.

Model Encoding

SKA 20 W8 – 12

- 12 → Output voltage (3.3/5/12/15/24Vdc，±12/±15Vdc)
- W8 → 8:1(9~75Vdc) Wide input voltage
- 20 → Rated wattage
- SKA → Series name { S:Single output / D:Dual output

Downloaded from Arrow.com.

MODEL SELECTION TABLE

ORDER NO.	INPUT			OUTPUT		EFFICIENCY (TYP.)	CAPACITOR LOAD (MAX.)
	INPUT VOLTAGE (RANGE)	INPUT CURRENT		OUTPUT VOLTAGE	OUTPUT CURRENT		
		NO LOAD	FULL LOAD				
SKA20W8-03	Nominal 12V, 24V,36V,48V,72V (9 ~ 75V)	10mA	809mA	3.3V	0~5000mA	85%	1000μF
SKA20W8-05		10mA	958mA	5V	0~4000mA	88%	1000μF
SKA20W8-12		10mA	947mA	12V	0~1670mA	88%	220μF
SKA20W8-15		10mA	947mA	15V	0~1333mA	89%	220μF
SKA20W8-24		10mA	947mA	24V	0~833mA	89%	100μF
DKA20W8-12		20mA	947mA	±12V	±0~833mA	88%	*100μF
DKA20W8-15		20mA	947mA	±15V	±0~666mA	88%	*100μF

* For each output

Downloaded from Arrow.com.

SPECIFICATION

INPUT	
VOLTAGE RANGE	9~75Vdc
SURGE VOLTAGE (100ms max.)	100Vdc
FILTER	Pi network
PROTECTION	Fuse recommended 6A Slow-Blow
OUTPUT	
VOLTAGE ACCURACY	±2%
RATED POWER	20W
RIPPLE & NOISE Note.2	150mVp-p
LINE REGULATION Note.3	±0.5%
LOAD REGULATION Note.4	±1% for 3.3Vdc output, ±0.5% for other output
CROSS REGULATION	±5% @ 25% ~ 100% load only dual output
SWITCHING FREQUENCY (Typ.)	200KHz (PWM)
PROTECTION	
SHORT CIRCUIT	Protection type : Continuous, automatic recovery
OVERLOAD	110 ~ 230%
	Protection type : Recovers automatically after fault condition is removed
OVER VOLTAGE	Clamp by TVS diodes
UNDER VOLTAGE LOCKOUT (Typ.)	Start-up voltage: 8.8Vdc
	Shutdown voltage: 7.5Vdc
FUNCTION	
REMOTE CONTROL (By request)	Power ON: R.C. ~ -Vin >2.5~30Vdc or open circuit ; Power OFF: R.C. ~ -Vin <1Vdc or short
ENVIRONMENT	
COOLING	Free-air convection
WORKING TEMP.	-40 ~ +90℃ (Refer to "Derating Curve")
CASE TEMPERATURE	+110℃ max.
WORKING HUMIDITY	5% ~ 95% RH non-condensing
STORAGE TEMP., HUMIDITY	-55 ~ +125℃, 10 ~ 95% RH non-condensing
TEMP. COEFFICIENT	±0.03% / ℃ (0 ~ 80℃)
SOLDERING TEMPERATURE	1.5mm from case of 3 ~ 5 sec./265℃ max.
VIBRATION	10 ~ 500Hz, 2G 10min./1cycle, period for 60min. each along X, Y, Z axes
SAFETY & EMC (Note.5)	
SAFETY STANDARDS	EAC TP TC 020/2011 approved
WITHSTAND VOLTAGE	I/P-O/P:3KVdc
ISOLATION RESISTANCE	I/P-O/P:1000M Ohms / 500Vdc / 25℃/ 70% RH
ISOLATION CAPACITANCE (Typ.)	1000pF

EMC EMISSION	**Parameter**	**Standard**	**Test Level / Note**
	Conducted	BS EN/EN55032(CISPR32)	N/A
	Radiated	BS EN/EN55032(CISPR32)	Class A without additional components Class B with additional components
EMC IMMUNITY	**Parameter**	**Standard**	**Test Level / Note**
	ESD	BS EN/EN61000-4-2	Level 3, ±8KV air, Level 2, ±4KV contact
	Radiated Susceptibility	BS EN/EN61000-4-3	Level 2, 3V/m
	EFT/Bursts	BS EN/EN61000-4-4	Level 1, 0.5KV
	Surge	BS EN/EN61000-4-5	Level 2, Line-Line±0.5KV
	Conducted	BS EN/EN61000-4-6	Level 2, 3V(e.m.f.)
	Magnetic Field	BS EN/EN61000-4-8	Level 1, 1A/m

OTHERS	
MTBF	>600Khrs MIL-HDBK-217F(25℃)
DIMENSION (L*W*H)	**50.8*25.4*11.2mm (2*1*0.44 inch)**
CASE MATERIAL	Six-side shielded case
PACKING	31g ; 10pcs/per tube, 400pcs/40 tube/per carton

NOTE

1. All parameters are specified at normal input (24Vdc), rated load, 25℃ 70% RH ambient.
2. Ripple & noise are measured at 20MHz by using a 12" twisted pair terminated with a 0.1μf & 47μf capacitor.
3. Line regulation is measured from low line to high line at rated load.
4. Load regulation is measured from 0% to 100% rated load.
5. The final equipment must be re-confirm that it still meet EMC directives. For guidance on how to perform these EMC tests, please refer to "EMI testing of component power supplies."(as available on http://www.meanwell.com)

※ Product Liability Disclaimer : For detailed information, please refer to https://www.meanwell.com/serviceDisclaimer.aspx

Downloaded from Arrow.com.

■ Derating Curve

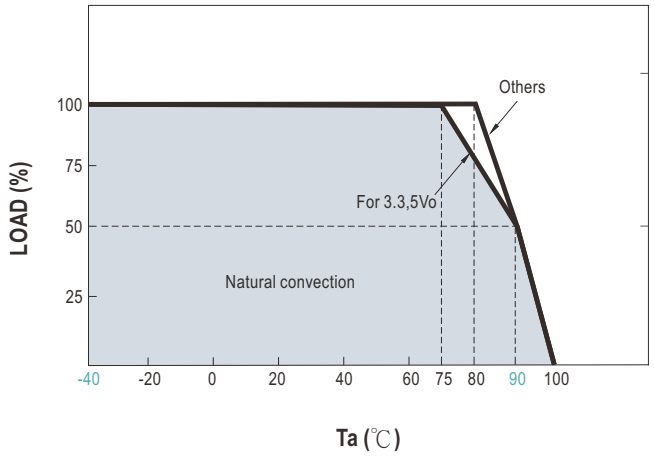

■ EMC Suggestion Circuit

※ Required external componets to meet BS EN/EN55032 radiated Class B emission as below:

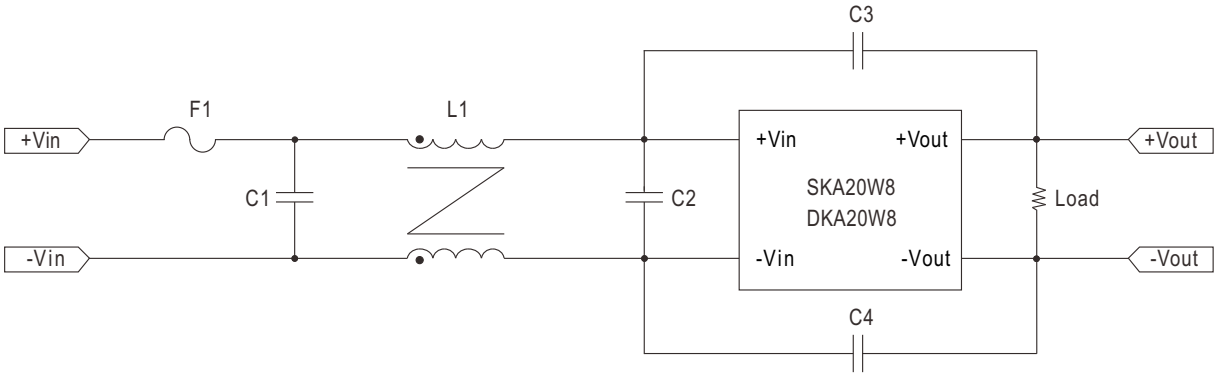

Model No.	BS EN/EN55032 radiated Class B					
	F1	C1	C2	C3	C4	L1
SKA20W8 DKA20W8	Suggest 6A Slow-Blow Type	47μF/100V	2.2μF/100V	1000pF/5KV	1000pF/5KV	325μH Common Choke

Downloaded from Arrow.com.

External Output Trimming

In order to trim the voltage up or down one needs to connect the trim resistor either between the trim pin and -Vo for trim-up and between trim pin and +Vo for trim-down. This is shown in Figures 1 and 2:

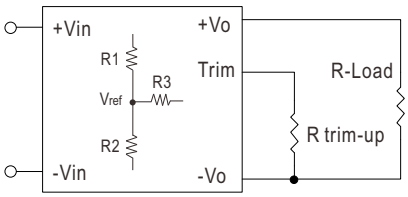

Figure 1. Trim-up Voltage Setup

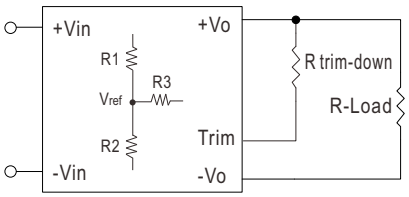

Figure 2. Trim-down Voltage Setup

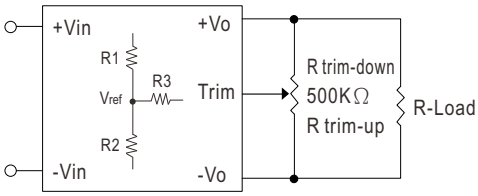

Figure 3. Trim-Connections

Table 1 – Trim up and Trim down Resistor Values

Model Number	Output Voltage(V)	R1 (KΩ)	R2 (KΩ)	R3 (KΩ)	Vref
SKA20W8-03	3.3	2.43	1.47	7.5	1.24
SKA20W8-05	5	1	1	3.6	2.5
SKA20W8-12	12	3.83	1	7.5	2.5
SKA20W8-15	15	7.5	1.5	11	2.5
SKA20W8-24	24	8.66	1	8.2	2.5

1. The value of **$R_{trim-up}$** defined as:

$$A = \left(\frac{V_{ref}}{V_o' - V_{ref}}\right) \times R1$$

$$R_{trim-up} = \left(\frac{A \times R2}{R2 - A}\right) - R3$$

Where

$R_{trim-up}$ is the external resistor in Kohm.

$V_{o,\,nom}$ is the nominal output voltage.

V_o' is the desired output voltage.

R1, R2, R3 and V_{ref} are internal to the unit and defined in Table 1.

For example, to trim-up the output voltage of 12V model (SKA20W8-12) by 10% to 13.2V, $R_{trim-up}$ is calculated as follows:

$V_{o,nom}$ = 12V

V_o' = 13.2V

R1 = 3.83 KΩ

R2 = 1 KΩ

R3 = 7.5 KΩ

Vref = 2.5V

$$A = \left(\frac{2.5}{13.2 - 2.5}\right) \times 3.83 = 0.894$$

$$R_{trim-up} = \left(\frac{0.894 \times 1}{1 - 0.894}\right) - 7.5$$

$$= \left(\frac{0.894}{0.106}\right) - 7.5$$

$$= 0.933K\Omega$$

Downloaded from Arrow.com.

2. The value of **$R_{trim-down}$** defined as:

$$A = \left(\frac{V_o' - V_{ref}}{V_{ref}}\right) \times R2$$

$$R_{trim-down} = \left(\frac{A \times R1}{R1 - A}\right) - R3$$

Where

$R_{trim-down}$ is the external resistor in Kohm.

$V_{o,nom}$ is the nominal output voltage.

V_o' is the desired output voltage.

R1, R2, R3 and Vref are internal to the unit and defined in Table 1.

For example, to trim-down the output voltage of 12V model (SKA20W8-12) by 10% to 10.8V, $R_{trim-down}$ is calculated as follows:

$V_{o,nom}$ = 12V

V_o' = 10.8V

R1 = 3.83 KΩ

R2 = 1 KΩ

R3 = 7.5 KΩ

Vref = 2.5V

$$A = \left(\frac{10.8 - 2.5}{2.5}\right) \times 1 = 3.32$$

$$R_{trim-down} = \left(\frac{3.32 \times 3.83}{3.83 - 3.32}\right) - 7.5$$

$$= \left(\frac{12.715}{0.15}\right) - 7.5$$

$$= 17.431K\Omega$$

Downloaded from Arrow.com.

■ Mechanical Specification

- All dimensions in mm(inch)
- Tolerance:x.x,x.xx±0.5mm(x.xx±0.02")
- Pin tolerance: ϕ 1±0.1mm

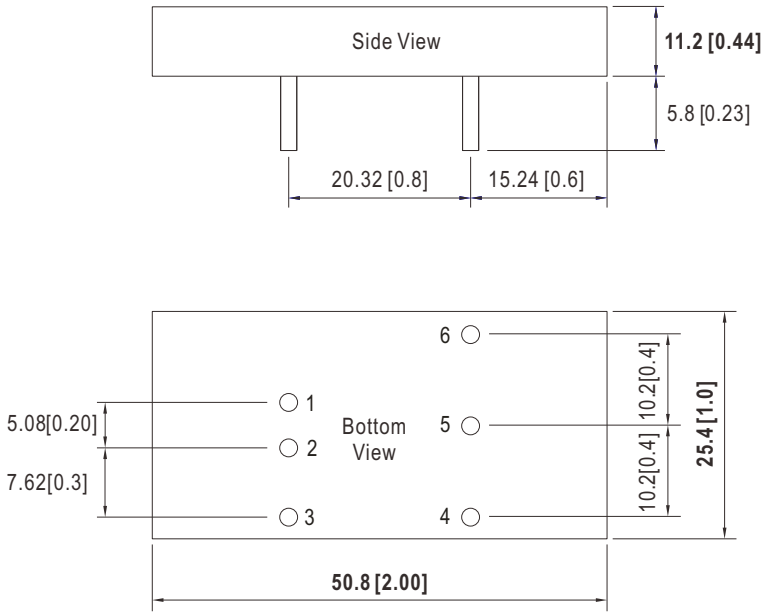

■ Pin Assignment

Pin-Out		
Pin No.	SKA20W8 (Single output)	DKA20W8 (Dual output)
1	+Vin	+Vin
2	-Vin	-Vin
3	R.C.	R.C.
4	-Vout	-Vout
5	Trim	Common
6	+Vout	+Vout

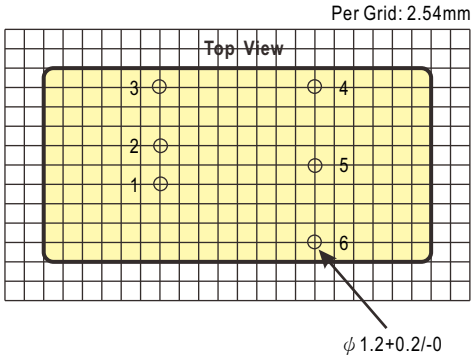

Downloaded from Arrow.com.

Packing

Standard Tube Packing	MPQ Per Tube (PCS)	One Tube G.W.	Max. Q'TY/ Carton(PCS)	One Carton G.W.
Unit : mm 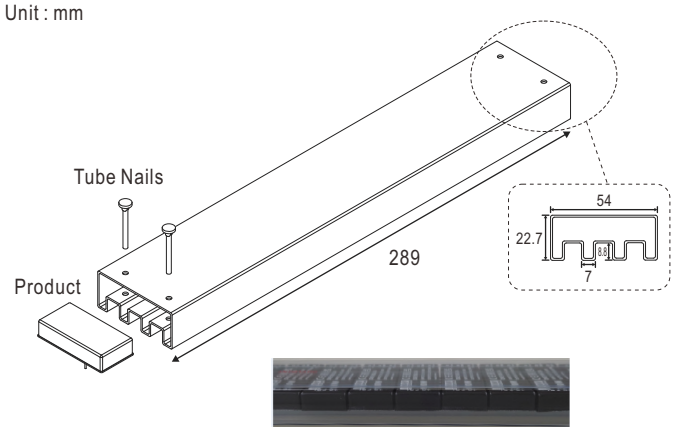 Tube pattern 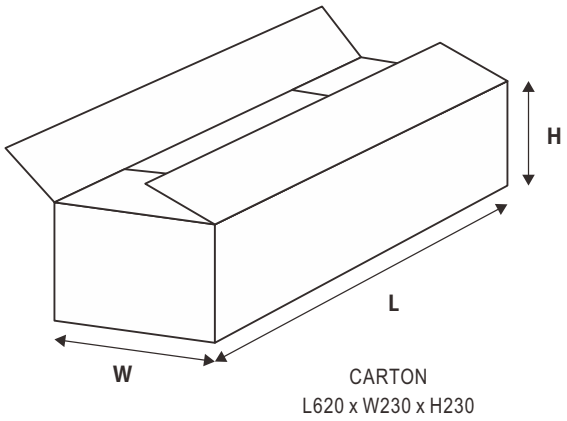 CARTON L620 x W230 x H230	10	398g	400	16.72Kg

Installation Manual

Please refer to : http://www.meanwell.com/manual.html

Downloaded from Arrow.com.