REVISIONS			
LTR	DESCRIPTION	DATE	APPROVED
C	REVISED PER DCR# T-31731	March/26/03	M.HIGGY

NOTES:

1. SCREWS ARE SHIPPED LOOSE.
2. MATERIAL: BACKSHELL – ALUMINUM ALLOY, CADMIUM PLATED
   BRAID – COPPER ALLOY, TIN PLATED
   SCREW – STAINLESS STEEL, PASSIVATED & CAD PLATED W/THREAD LOCK.
3. THE 12.0" APPROX. APPLIES TO THE BRAID IN THE "FLAT" AS SUPPLIED CONDITION.
4. SHIELDING EFFECTIVENESS IS LEVEL 1 PER C-6111 AND C-6115.

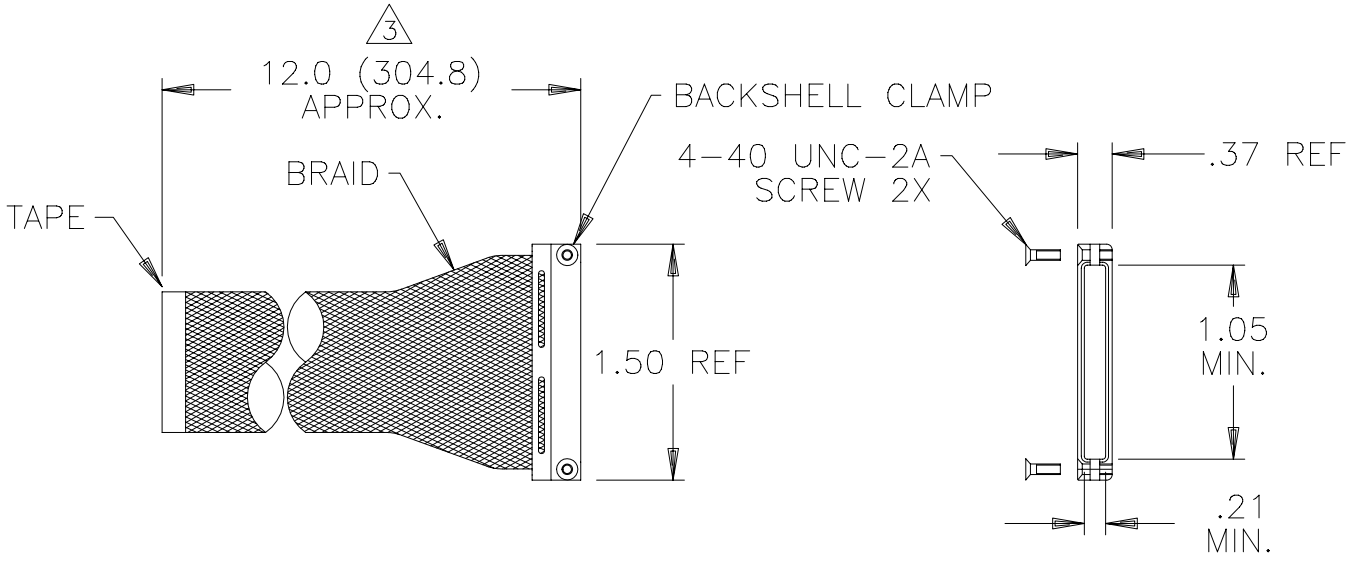

SPECIFICATION CONTROL DRAWING

If this document is printed it becomes uncontrolled. Check for the latest revision.

UNLESS OTHERWISE SPECIFIED DIMENSIONS ARE IN INCHES. METRIC DIMENSIONS ARE IN BRACKETS.

TOLERANCES:
.XXX ± [mm]
.XX ±.03 [mm]
ANGLE

DRAWN	ZS.ORBAN	DATE MARCH/24/03
CHECKED		DATE
APPROVED	M.HIGGY	DATE MARCH/24/03
THIRD ANGLE PROJECTION		
CAD NAME	T31731.DWG	
P.C.N.	492897	

tyco Electronics

Raychem Products
305 Constitution Drive
Menlo Park, CA. USA 94025

TITLE

BACKSHELL, 1 INCH EMX SUPPRESSING MTC SERIES

SIZE	CODE IDENT. NO.	DWG. NO.	REV
A	06090	CHA-0276	C

SCALE: NONE | DO NOT SCALE THIS DRAWING | SHEET 1 OF 1

Downloaded from Arrow.com.