DATE
15.10.2018

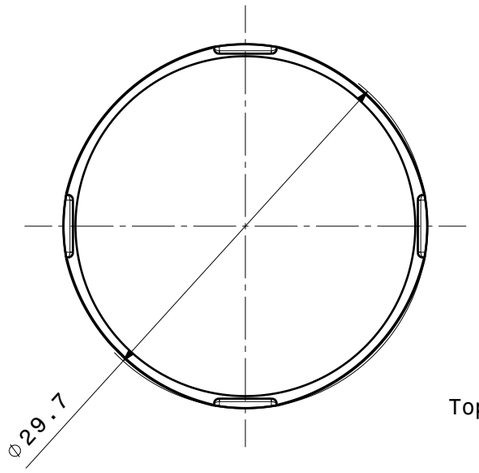

Top view

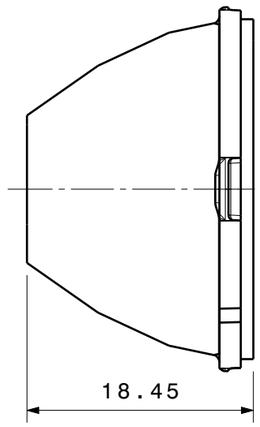

Front view

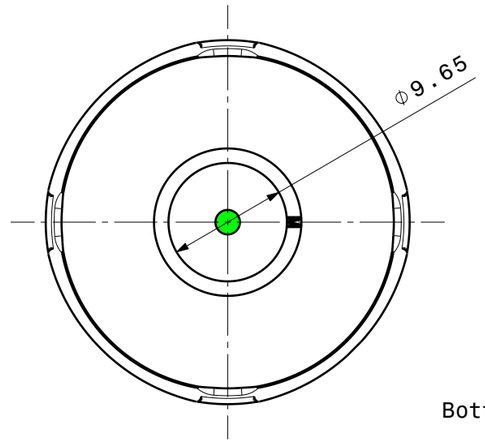

Bottom view

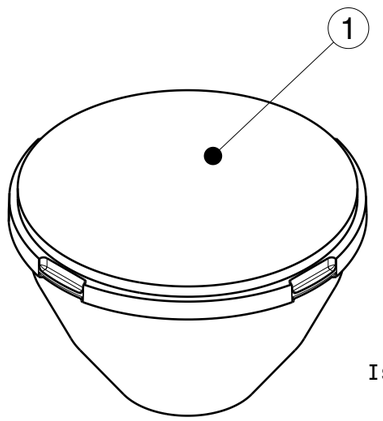

Isometric view

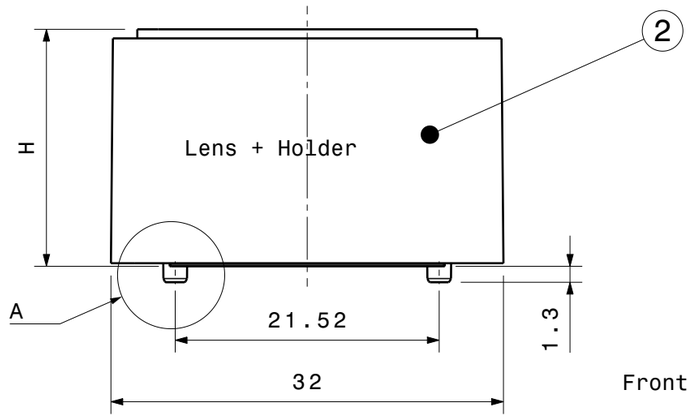

Front view

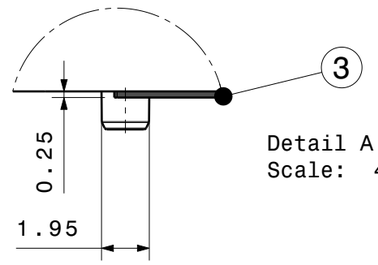

Detail A
Scale: 4:1

INDEX	PART	TYPE	MATERIAL	COLOR / COATING
1	C16123_OLGA-S	LENS	PMMA	CLEAR
1	C16124_OLGA-M	LENS	PMMA	CLEAR
1	C16125_OLGA-W	LENS	PMMA	CLEAR
1	C16307_OLGA-WAS	LENS	PMMA	CLEAR
1	C16671_OLGA-RS	LENS	PMMA	CLEAR
1	C16673_OLGA-O	LENS	PMMA	CLEAR
2	C16126_OLGA_HLD	HOLDER	PC	BLACK
3	C15177_SPUTNIK-TAPE3	TAPE	PU-FOAM	BLACK

This mechanical drawing can be used for following assembly codes	Dimension H
CA16127_OLGA-S	19.54
CA16128_OLGA-M	19.29
CA16129_OLGA-W	19.29
CA16308_OLGA-WAS	19.44
CA16672_OLGA-RS	19.46
C16673_OLGA-O	19.43

Notes

LED location
Ensure LED fitting from a product specific 3D model available from www.ledil.com
For more details about installation please see LEDiL Installation Guide on www.ledil.com

MECHANICAL DRAWING

PRODUCT

OLGA FAMILY

LEDiL®

Plastic moulding general tolerances according to DIN 16901-130 and applies if not otherwise shown in the drawing. Silicone moulding general tolerances according to ISO 3302-1 Class M3 and applies if not otherwise shown in the drawing.

FIRST ANGLE PROJECTION:

This drawing is the property of LEDiL Oy. It may not be copied or otherwise distributed without prior written permission from LEDiL Oy.

SCALE 2:1 | WEIGHT - | A3 | SHEET 1/1

Downloaded from Arrow.com.