2.5 A Output Current, IGBT Drive Optocoupler with Active Miller Clamp, Desaturation Detection, and Isolated Fault Sensing

FOD8318

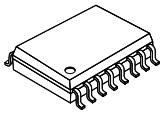

SOIC16 W
CASE 751EN

MARKING DIAGRAM

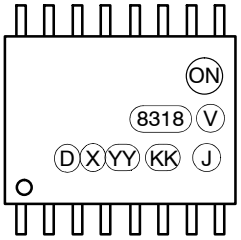

8318 = Device Number, e.g., '8318' for FOD8318
V = DIN EN/IEC60747−5−5 Option (Only Appears on Component Ordered with this Option)
D = Plant code, e.g., 'D'
X = Last−digit Year Code, e.g., 'B' for 2011
YY = Two−digit Work Week Ranging from '01' to '53'
KK = Lot Traceability Code
J = Package Assembly Code, J

ORDERING INFORMATION

See detailed ordering and shipping information on page 27 of this data sheet.

Description

The FOD8318 is an advanced 2.5 A output current IGBT drive optocoupler capable of driving most 1200 V / 150 A IGBTs. It is ideally suited for fast−switching driving of power IGBTs and MOSFETs used in motor control inverter applications and high−performance power systems. It consists of an integrated gate drive optocoupler featuring low $R_{DS(ON)}$ CMOS transistors to drive the IGBT from rail to rail and an integrated high−speed isolated feedback for fault sensing. The FOD8318 has an active Miller clamp fuction to shut off the IGBT during a high dv/dt situation without the need of a negative supply voltage. It offers critical protection features necessary for preventing fault conditions that lead to destructive thermal runaway of IGBTs.

It utilizes **onsemi**'s proprietary OPTOPLANAR® coplanar packaging technology and optimized IC design to achieve high noise immunity, characterized by high common mode rejection and power supply rejection specifications.

The device is housed in a compact 16−pin small outline plastic package that meets the 8 mm creepage and clearance requirements.

Features

- High Noise Immunity Characterized by Common Mode Rejection
  - 35 kV / μs Minimum Common Mode Rejection (Vcm = 1500 V_{peak})
- 2.5 A Peak Output Current Driving Capability for Most 1200 V / 150 A IGBT
- Optically Isolated Fault Sensing Feedback
- Active Miller Clamp to Shut Off the IGBT During High dv/dt without Needing a Negative Supply Voltage
- "Soft" IGBT Turn−off
- Built−in IGBT Protection
  - Desaturation Detection
  - Under−voltage Lock Out (UVLO) Protection
- Wide Supply Voltage Range from 15 V to 30 V
  - Use of P−Channel MOSFETs at Output Stage Enables Output Voltage Swing Close to the Supply Rail (Rail−to−rail Output)
- 3.3 V / 5 V, CMOS/TTL−compatible Inputs
- High Speed
  - 250 ns Max. Propagation Delay over Full Operating Temperature Range

Features (continued)

- Extended Industrial Temperate Range, −40°C to 100°C Temperature Range
- Safety and Regulatory Approvals
  - UL1577, 4,243 V_{RMS} for 1 min.
  - DIN EN/IEC 60747−5−5,1,414 V_{peak} Working Insulation Voltage, 8000 V_{peak} Transient Isolation Voltage Ratings
- $R_{DS(ON)}$ of 1 Ω (Typ.) Offers Lower Power Dissipation
- User Configurable: Inverting, Non−inverting, Auto−reset, Auto−shutdown
- 8 mm Creepage and Clearance Distances

Applications

- Industrial Inverter
- Induction Heating
- Isolated IGBT Drive

© Semiconductor Components Industries, LLC, 2010

Downloaded from Arrow.com.

TRUTH TABLE

V_{IN+}	V_{IN-}	UVLO ($V_{DD2} - V_E$)	DESAT Detected?	$\overline{FAULT}$	V_{OUT}*
X	X	Active	X	X	LOW
X	X	X	Yes	LOW	LOW
LOW	X	X	X	X	LOW
X	HIGH	X	X	X	LOW
HIGH	LOW	Not Active	No	HIGH	HIGH

*V_{OUT} is always LOW with 'clamp' being active (gate voltage < 2 V above V_{SS}).

PIN DEFINITIONS

Pin No.	Name	Description
1	V_{IN+}	Non−inverting gate drive control input
2	V_{IN-}	Inverting gate drive control input
3	V_{DD1}	Positive input supply voltage (3 V to 5.5 V)
4	GND1	Input ground
5	$\overline{RESET}$	Fault reset input
6	$\overline{FAULT}$	Fault output
7	V_{LED1+}	LED 1 anode (must be left unconnected)
8	V_{LED1-}	LED 1 cathode (must be connected to ground)
9	V_{SS}	Output supply voltage (negative)
10	V_{CLAMP}	Active Miller clamp supply voltage
11	V_O	Gate drive output voltage
12	V_S	Source of pull−up PMOS transistor
13	V_{DD2}	Positive output supply voltage
14	DESAT	Desaturation voltage input
15	V_{LED2+}	LED 2 anode (must be left unconnected)
16	V_E	Output supply voltage / IGBT emitter

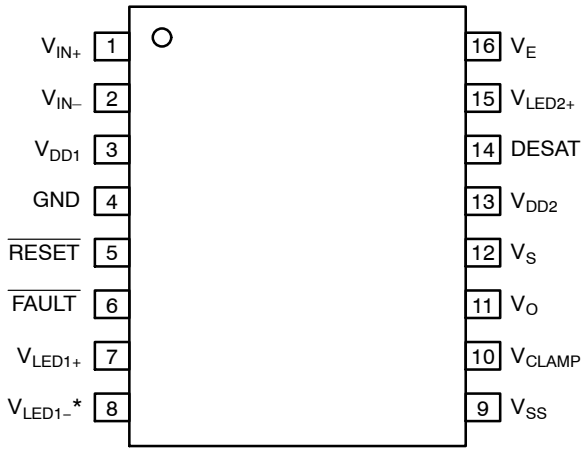

Figure 1.

Downloaded from Arrow.com.

BLOCK DIAGRAM

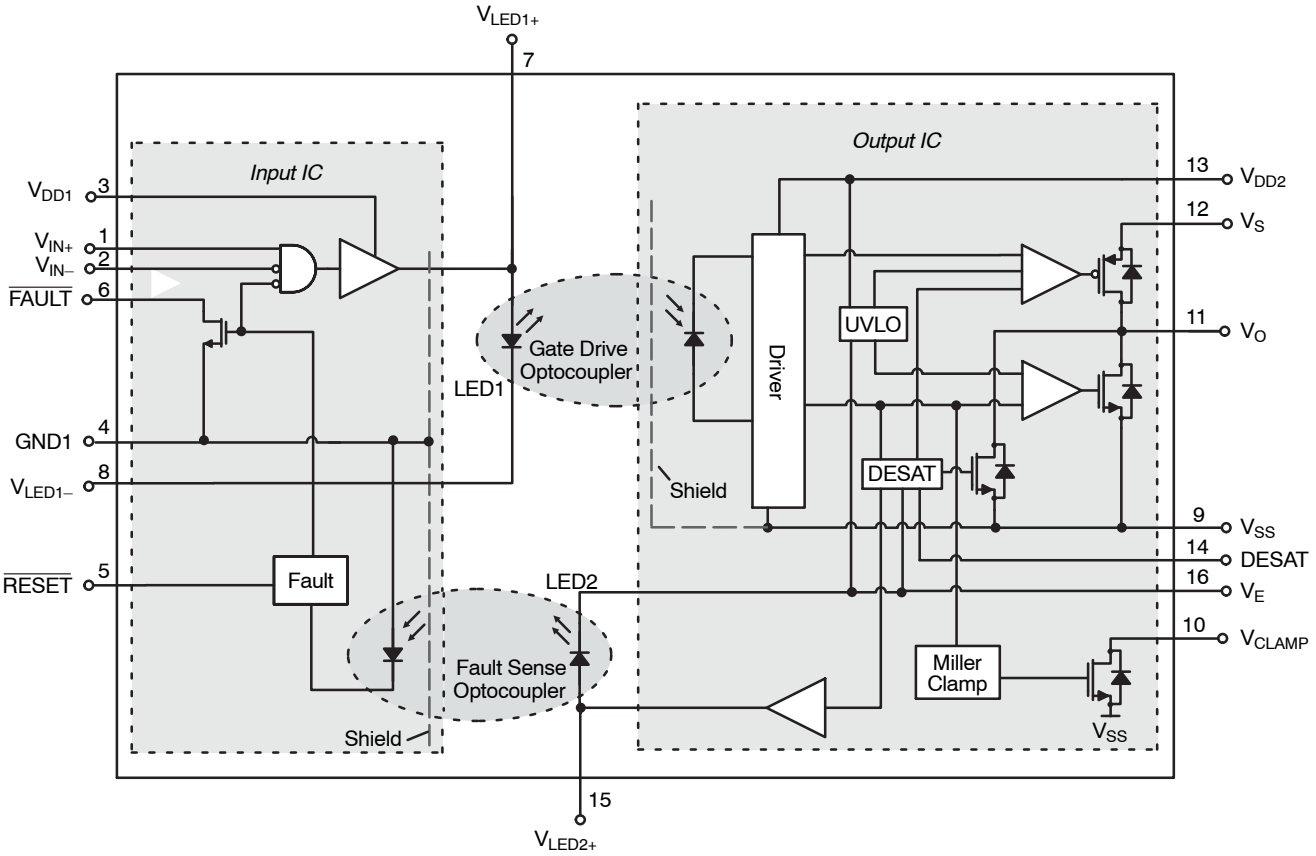

Figure 2. Block Diagram

Downloaded from Arrow.com.

SAFETY AND INSULATION RATINGS (As per DIN EN/IEC 60747−5−5. This optocoupler is suitable for “safe electrical insulation” only within the safety limit data. Compliance with the safety ratings shall be ensured by means of protective circuits.)

Symbol	Parameter	Min.	Typ.	Max.	Unit
	Installation Classifications per DIN VDE 0110/1.89 Table 1 For Rated Mains Voltage < 150 Vrms	–	I–IV	–	
	For Rated Mains Voltage < 300 Vrms	–	I–IV	–	
	For Rated Mains Voltage < 450 Vrms	–	I–IV	–	
	For Rated Mains Voltage < 600 Vrms	–	I–IV	–	
	For Rated Mains Voltage < 1000 Vrms	–	I–III	–	
	Climatic Classification	–	40/100/21	–	
	Pollution Degree (DIN VDE 0110/1.89)	–	2	–	
CTI	Comparative Tracking Index	175	–	–	
V_{PR}	Input to Output Test Voltage, Method b, V_{IORM} x 1.875 = V_{PR}, 100 % Production Test with t_m = 1 s, Partial Discharge < 5 pC	2,651	–	–	V_{peak}
	Input to Output Test Voltage, Method a, V_{IORM} x 1.5 = V_{PR}, Type and Sample Test with t_m = 60 s, Partial Discharge < 5 pC	2,121	–	–	V_{peak}
V_{IORM}	Maximum Working Insulation Voltage	1,414	–	–	V_{peak}
V_{IOTM}	Highest Allowable Over Voltage	8,000	–	–	V_{peak}
	External Creepage	8	–	–	mm
	External Clearance	8	–	–	mm
	Insulation Thickness	0.5	–	–	mm
T_{Case}	Safety Limit Values – Maximum Values Allowed in the Event of a Failure Case Temperature	150	–	–	°C
$P_{S,INPUT}$	Input Power	100	–	–	mW
$P_{S,OUTPUT}$	Output Power	600	–	–	mW
R_{IO}	Insulation Resistance at T_S, V_{IO} = 500 V	10_9	–	–	Ω

Downloaded from Arrow.com.

ABSOLUTE MAXIMUM RATINGS (T_A = 25°C unless otherwise noted)

Symbol	Parameter	Value	Unit
T_{STG}	Storage Temperature	−40 to +125	°C
T_{OPR}	Operating Temperature	−40 to +100	°C
T_J	Junction Temperature	−40 to +125	°C
T_{SOL}	Lead Wave Solder Temperature (No Solder Immersion) *Refer to page 26 for reflow temperature profile.*	260 for 10 s	°C
I_{FAULT}	Fault Output Current	15	mA
$I_{O(PEAK)}$	Peak Output Current (Note 1)	3	A
$V_E - V_{SS}$	Negative Output Supply Voltage (Note 2)	0 to 15	V
$V_{DD2} - V_E$	Positive Output Supply Voltage	−0.5 to 35 − ($V_E - V_{SS}$)	V
$V_{O(peak)}$	Gate Drive Output Voltage	−0.5 to 35	V
$V_{DD2} - V_{SS}$	Output Supply Voltage	−0.5 to 35	V
V_{DD1}	Positive Input Supply Voltage	−0.5 to 6	V
V_{IN+}, V_{IN-} and V_{RESET}	Input Voltages	−0.5 to V_{DD1}	V
V_{FAULT}	Fault Pin Voltage	−0.5 to V_{DD1}	V
V_S	Source of Pull−up PMOS Transistor Voltage	V_{SS} + 6.5 to V_{DD2}	V
V_{DESAT}	DESAT Voltage	V_E to V_E +25	V
I_{CLAMP}	Peaking Clamping Sinking Current	1.7	A
V_{CLAMP}	Miller Clamping Voltage	−0.5 to V_{DD2}	V
PD_I	Input Power Dissipation (Note 3, 5)	100	mW
PD_O	Output Power Dissipation (Note 4, 5)	600	mW

Stresses exceeding those listed in the Maximum Ratings table may damage the device. If any of these limits are exceeded, device functionality should not be assumed, damage may occur and reliability may be affected.

1. Maximum pulse width = 10 μs, maximum duty cycle = 0.2 %.
2. This negative output supply voltage is optional. It's only needed when negative gate drive is implemented. A schottky diode is recommended to be connected between V_E and V_{SS} to protect against a reverse voltage greater than 0.5 V. Refer to application information, *"Active Miller Clamp Function" on page 24*.
3. No derating required across temperature range.
4. Derate linearly above 64°C, free air temperature at a rate of 10.2 mW/°C.
5. Functional operation under these conditions is not implied. Permanent damage may occur if the device is subjected to conditions outside these ratings.

RECOMMENDED OPERATING CONDITIONS

Symbol	Parameter	Min	Max	Unit
T_A	Ambient Operating Temperature	−40	+100	°C
V_{DD1}	Input Supply Voltage (Note 6)	3	5.5	V
$V_{DD2} - V_{SS}$	Total Output Supply Voltage	15	30	V
$V_E - V_{SS}$	Negative Output Supply Voltage	0	15	V
$V_{DD2} - V_E$	Positive Output Supply Voltage (Note 6)	15	30 − ($V_E - V_{SS}$)	V
V_S	Source of Pull−up PMOS Transistor Voltage	V_{SS} + 7.5	V_{DD2}	V

Functional operation above the stresses listed in the Recommended Operating Ranges is not implied. Extended exposure to stresses beyond the Recommended Operating Ranges limits may affect device reliability.

6. During power up or down, it is important to ensure that VIN+ remains LOW until both the input and output supply voltages reach the proper recommended operating voltage to avoid any momentary instability at the output state. *Refer to "Time to Good Power" section on page 24*.

Downloaded from Arrow.com.

ISOLATION CHARACTERISTICS (Apply over all recommended conditions, typical value is measured at T_A = 25°C)

Symbol	Parameter	Conditions	Min	Typ	Max	Unit
V_{ISO}	Input−Output Isolation Voltage	T_A = 25°C, R.H.< 50 %, t = 1.0 min, I_{I-O} < 10 μA, 50 Hz (Note 7, 8, 9)	4,243	–	–	V_{RMS}
R_{ISO}	Isolation Resistance	V_{I-O} = 500 V (Note 7)	–	10^{11}	–	Ω
C_{ISO}	Isolation Capacitance	V_{I-O} = 0 V, freq = 1.0 MHz (Note 7)	–	1	–	pF

7. Device is considered a two terminal device: pins 1 to 8 are shorted together and pins 9 to 16 are shorted together.
8. 4,243 V_{RMS} for 1−minute duration is equivalent to 5,091 V_{RMS} for 1−second duration.
9. The Input−Output Isolation Voltage is a dielectric voltage rating as per UL1577. It should not be regarded as an input−output continuous voltage rating. For the continuous working voltage rating, refer to the equipment level safety specification or *DIN EN/IEC 60747−5−5* *Safety and Insulation Ratings* *Table on page 4*.

ELECTRICAL CHARACTERISTICS (Apply over all recommended conditions, typical value is measured at V_{DD1} = 5 V, $V_{DD2} - V_{SS}$ = 30 V, $V_E - V_{SS}$ = 0 V, T_A = 25°C unless otherwise specified.)

Symbol	Parameter	Conditions	Min	Typ	Max	Unit	Figure
V_{IN+L}, V_{IN-L}, $V_{\overline{RESETL}}$	Logic Low Input Voltages		–	–	0.8	V	
V_{IN+H}, V_{IN-H}, $V_{\overline{RESETH}}$	Logic High Input Voltages		2.0	–	–	V	
I_{IN+L}, I_{IN-L}, $I_{\overline{RESETL}}$	Logic Low Input Currents	V_{IN} = 0.4 V	−0.5	−0.001	–	mA	
$I_{\overline{FAULTL}}$	$\overline{FAULT}$ Logic Low Output Current	$V_{\overline{FAULT}}$ = 0.4 V	5.0	12.0	–	mA	3, 37
$I_{\overline{FAULTH}}$	$\overline{FAULT}$ Logic High Output Current	$V_{\overline{FAULT}}$ = V_{DD1}	−40	0.002	–	μA	37
I_{OH}	High Level Output Current	V_O = V_{DD2} − 3 V	−1	−2.5	–	A	4, 9, 38
		V_O = V_{DD2} − 6 V (Note 10)	−2.5	–	–	A	
I_{OL}	Low Level Output Current	V_O = V_{SS} + 3 V	1	3	–	A	5, 39
		V_O = V_{SS} + 6 V (Note 11)	2.5	–	–	A	
I_{OLF}	Low Level Output Current During Fault Condition	V_O − V_{SS} = 14 V	70	125	170	mA	6, 43
V_{OH}	High Level Output Voltage	I_O = −100 mA (Note 12, 13, 14)	V_S − 1.0 V	V_S − 0.5 V	–	V	7, 9, 40
V_{OL}	Low Level Output Voltage	I_O = 100 mA	–	0.1	0.5	V	8, 10, 40
I_{DD1H}	High Level Supply Current	V_{IN+} = V_{DD1} = 5.5 V, V_{IN-} = 0 V	–	14	17	mA	11, 41
I_{DD1L}	Low Level Supply Current	V_{IN+} = V_{IN-} = 0 V, V_{DD1} = 5.5 V	–	2	3	mA	
I_{DD2H}	High Level Output Supply Current	V_O = Open (Note 14)	–	1.7	3	mA	12, 13, 42
I_{DD2L}	Low Level Output Supply Current	V_O = Open	–	1.8	2.8	mA	
I_{SH}	High Level Source Current	I_O = 0 mA	–	0.65	1.5	mA	42
I_{SL}	Low Level Source Current	I_O = 0 mA	–	0.6	1.4	mA	42
I_{EL}	V_E Low Level Supply Current		−0.8	−0.5	–	mA	15, 42
I_{EH}	V_E High Level Supply Current		−0.5	−0.25	–	mA	
I_{CHG}	Blanking Capacitor Charge Current	V_{DESAT} = 2 V (Note 14, 15)	−0.13	−0.25	−0.33	mA	14, 43
I_{DSCHG}	Blanking Capacitor Discharge Current	V_{DESAT} = 7 V	10	36	–	mA	43
V_{UVLO+}	Under−Voltage Lockout Threshold (Note 14)	V_O > 5 V at 25°C	10.8	11.7	12.7	V	17, 31, 44
V_{UVLO-}		V_O < 5 V at 25°C	9.8	10.7	11.7	V	
$UVLO_{HYS}$	Under−Voltage Lockout Threshold Hysteresis	At 25°C	0.4	1.0	–	V	
V_{DESAT}	DESAT Threshold (Note 14)	$V_{DD2} - V_E > V_{UVLO-}$, V_O < 5 V	6.0	6.5	7.2	V	18, 43

Downloaded from Arrow.com.

ELECTRICAL CHARACTERISTICS (Apply over all recommended conditions, typical value is measured at V_{DD1} = 5 V, $V_{DD2} - V_{SS}$ = 30 V, $V_E - V_{SS}$ = 0 V, T_A = 25°C unless otherwise specified.) (continued)

Symbol	Parameter	Conditions	Min	Typ	Max	Unit	Figure
V_{CLAMP_THRES}	Clamping Threshold Voltage		–	2.2	–	V	35, 54
I_{CLAMPL}	Clamp Low Level Sinking Current	$V_O = V_{SS}$ + 2.5 V	0.35	1.2	–	A	34, 53

Product parametric performance is indicated in the Electrical Characteristics for the listed test conditions, unless otherwise noted. Product performance may not be indicated by the Electrical Characteristics if operated under different conditions.

10. Maximum pulse width = 10 μs, maximum duty cycle = 0.2 %.
11. Maximum pulse width = 4.99 ms, maximum duty cycle = 99.8 %.
12. V_{OH} is measured with the DC load current in this testing (maximum pulse width = 1 ms, maximum duty cycle = 20 %). When driving capacitive loads, V_{OH} approaches V_{DD} as I_{OH} approaches zero units.
13. Positive output supply voltage ($V_{DD2} - V_E$) should be at least 15 V. This ensures adequate margin in excess of the maximum under−voltage lockout threshold V_{UVLO+} of 13.5 V.
14. When $V_{DD2} - V_E > V_{UVLO}$ and output state V_O of the FOD8318 is allowed to go HIGH, the DESAT detection feature is active and provides the primary source of IGBT protection. UVLO is needed to ensure DESAT detection is functional.
15. The blanking time, t_{BLANK}, is adjustable by an external capacitor (C_{BLANK}) where $t_{BLANK} = C_{BLANK} \times (V_{DESAT} / I_{CHG})$.

SWITCHING CHARACTERISTICS (Apply over all recommended conditions, typical value is measured at V_{DD1} = 5 V, $V_{DD2} - V_{SS}$ = 30 V, $V_E - V_{SS}$ = 0 V, T_A = 25°C unless otherwise specified.)

Symbol	Parameter	Conditions	Min	Typ	Max	Unit	Figure
t_{PHL}	Propagation Delay Time to Logic Low Output (Note 17)	Rg = 10 Ω Cg = 10 nF, f = 10 kHz, Duty Cycle = 50 % (Note 16)	–	140	250	ns	19, 20, 21, 22, 23, 24, 45, 53
t_{PLH}	Propagation Delay Time to Logic High Output (Note 18)		–	160	250	ns	
PWD	Pulse Width Distortion, $\lvert t_{PHL} - t_{PLH} \rvert$ (Note 19)		–	20	100	ns	
PDD Skew	Propagation Delay Difference between Any Two Parts or Channels, ($t_{PHL} - t_{PLH}$) (Note 20)		−150	–	150	ns	
t_R	Output Rise Time (10 % – 90 %)		–	25	–	ns	45, 55
t_F	Output Fall Time (90 % – 10 %)		–	25	–	ns	
$t_{DESAT(90\ \%)}$	DESAT Sense to 90 % V_O Delay (Note 21)	Rg = 10 Ω, Cg = 10 nF, $V_{DD2} - V_{SS}$ = 30 V	–	450	700	ns	25, 46
$t_{DESAT(10\ \%)}$	DESAT Sense to 10 % V_O Delay (Note 21)		–	2.7	4.0	μs	26, 28, 29, 46
$t_{DESAT(\overline{FAULT})}$	DESAT Sense to Low Level $\overline{FAULT}$ Signal Delay (Note 22)		–	1.4	5.0	μs	27, 46, 56
$t_{DESAT(LOW)}$	DESAT Sense to DESAT Low Propagation Delay (Note 23)		–	250	–	ns	46
$t_{RESET(\overline{FAULT})}$	$\overline{RESET}$ to High Level ^{FAULT} Signal Delay (Note 24)		3	6	20	μs	30, 47, 56
$t_{DESAT(MUTE)}$	DESAT Input Mute		10	22	35	μs	
$PW_{\overline{RESET}}$	$\overline{RESET}$ Signal Pulse Width		1.2	–	–	μs	
$t_{UVLO\ ON}$	UVLO Turn On Delay (Note 25)	V_{DD2} = 20 V in 1.0 ms Ramp	–	4	–	μs	31, 48
$t_{UVLO\ OFF}$	UVLO Turn Off Delay (Note 26)		–	3	–	μs	
t_{GP}	Time to Good Power (Note 27)	V_{DD2} = 0 to 30 V in 10 μs Ramp	–	2.5	–	μs	32, 33, 48
$\lvert CM_H \rvert$	Common Mode Transient Immunity at Output High	T_A = 25°C, V_{DD1} = 5 V, V_{DD2} = 25 V, V_{SS} = Ground, V_{CM} = 1500 V_{peak} (Note 28)	35	50	–	kV/μs	50, 51
$\lvert CM_L \rvert$	Common Mode Transient Immunity at Output Low	T_A = 25°C, V_{DD1} = 5 V, V_{DD2} = 25 V, V_{SS} = Ground, V_{CM} = 1500 V_{peak} (Note 29)	35	50	–	kV/μs	49, 52

16. This load condition approximates the gate load of a 1200 V / 150 A IGBT.

Downloaded from Arrow.com.

17. t_{PHL} propagation delay is measured from the 50 % level on the falling edge of the input pulse (V_{IN+}, V_{IN-}) to the 50 % level of the falling edge of the V_O signal. *Refer to Figure 55*.
18. t_{PHL} propagation delay is measured from the 50 % level on the rising edge of the input pulse (V_{IN+}, V_{IN-}) to the 50 % level of the rising edge of the V_O signal. *Refer to Figure 55*.
19. PWD is defined as $| t_{PHL} - t_{PLH} |$ for any given device.
20. The difference between t_{PHL} and t_{PLH} between any two FOD8318 parts under same operating conditions, with equal loads.
21. This is the amount of time the DESAT threshold must be exceeded before V_O begins to go LOW. This is supply voltage dependent. *Refer to Figure 56*.
22. This is the amount of time from when the DESAT threshold is exceeded, until the $\overline{\text{FAULT}}$ output goes LOW. *Refer to Figure 56*.
23. This is the amount of time the DESAT threshold must be exceeded before V_O begins to go LOW and the FAULT output to go LOW. *Refer to Figure 56*.
24. This is the amount of time from when $\overline{\text{RESET}}$ is asserted LOW, until $\overline{\text{FAULT}}$ output goes HIGH. *Refer to Figure 56*.
25. $t_{UVLO\ ON}$ UVLO turn−on delay is measured from V_{UVLO+} threshold voltage of the output supply voltage (V_{DD2}) to the 5 V level of the rising edge of the V_O signal.
26. $t_{UVLO\ OFF}$ UVLO turn−off delay is measured from V_{UVLO-} threshold voltage of the output supply voltage (V_{DD2}) to the 5 V level of the falling edge of the V_O signal.
27. t_{GP} time to good power is measured from 13.5 V level of the rising edge of the output supply voltage (V_{DD2}) to the 5 V level of the rising edge of the V_O signal.
28. Common mode transient immunity at output HIGH state is the maximum tolerable negative dVcm / dt on the trailing edge of the common mode pulse, V_{CM}, to assure that the output remains in HIGH state (i.e., V_O > 15 V or $\overline{\text{FAULT}}$ > 2 V).
29. Common mode transient immunity at output LOW state is the maximum positive tolerable dVcm / dt on the leading edge of the common mode pulse, V_{CM}, to assure that the output remains in a LOW state (i.e., V_O < 1.0 V or $\overline{\text{FAULT}}$ < 0.8 V).

Downloaded from Arrow.com.

TYPICAL PERFORMANCE CHARACTERISTICS

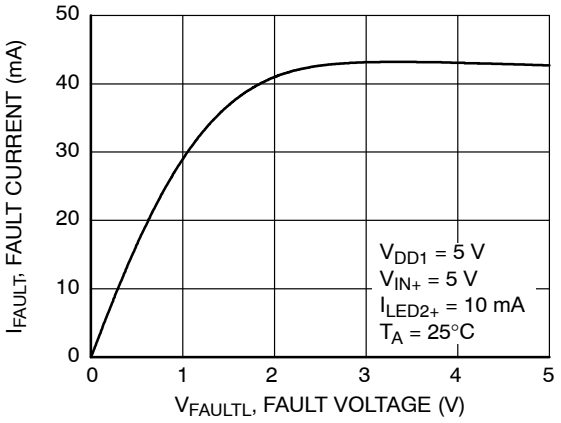

Figure 3. FAULT Logic Low Output Current ($I_{\overline{FAULTL}}$) vs. FAULT Logic Low Output Voltage ($V_{\overline{FAULTL}}$)

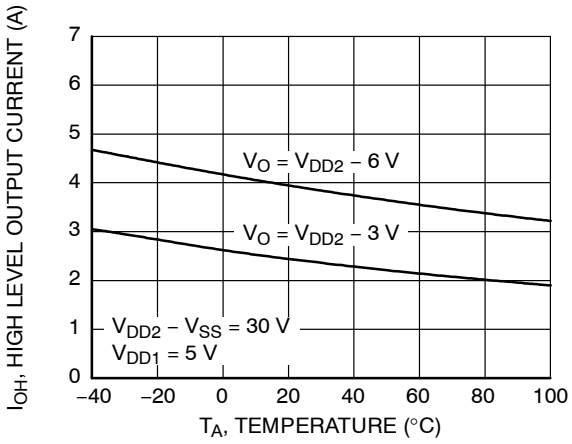

Figure 4. High Level Output Current (I_{OH}) vs. Temperature

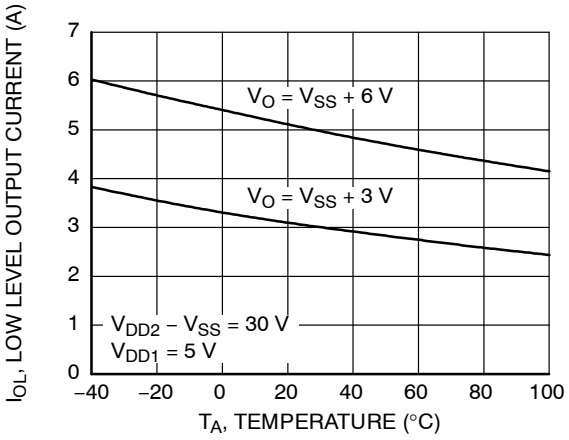

Figure 5. Low Level Output Current (I_{OL}) vs. Temperature

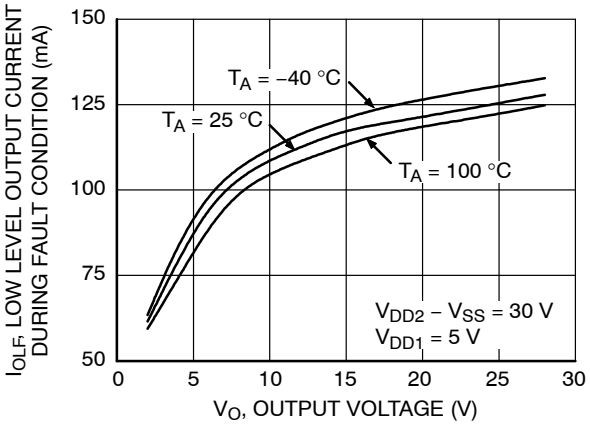

Figure 6. Low Level Output Current During Fault Condition (I_{OLF}) vs. Output Voltage (V_{OL})

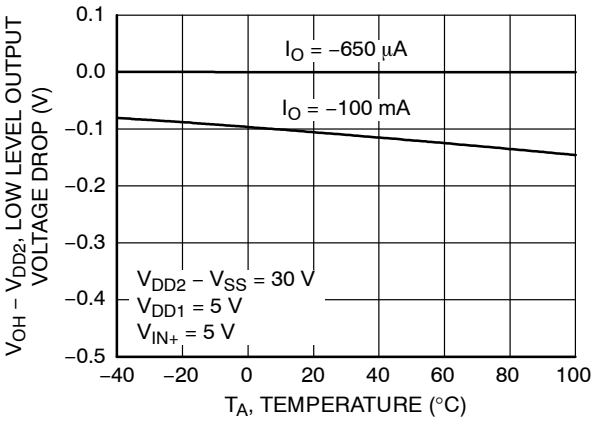

Figure 7. High Level Output Voltage Drop (V_{OH} – V_{DD}) vs. Temperature

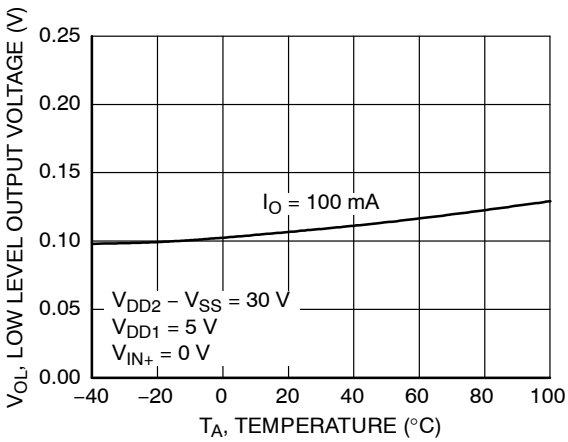

Figure 8. Low Level Output Voltage (V_{OL}) vs. Temperature

Downloaded from Arrow.com.

TYPICAL PERFORMANCE CHARACTERISTICS (Continued)

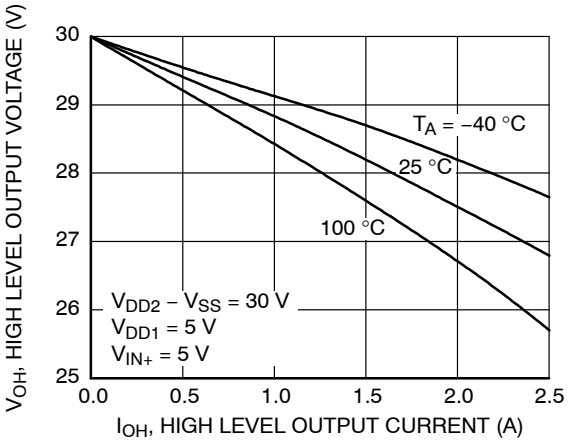

Figure 9. High Level Output Voltage (V_{OH}) vs. High Level Output Current (I_{OH})

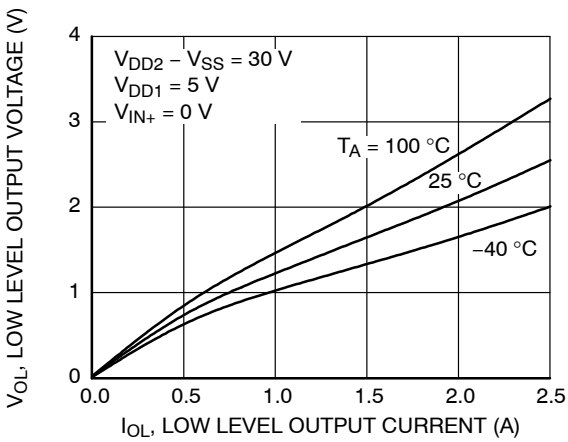

Figure 10. Low Level Output Voltage (V_{OL}) vs. Low Level Output Current (I_{OL})

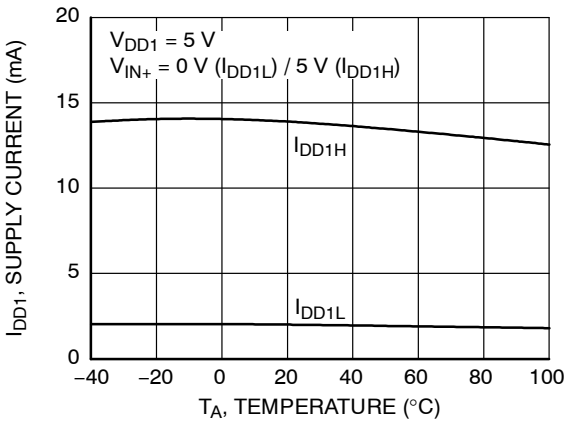

Figure 11. Supply Current (I_{DD1}) vs. Temperature

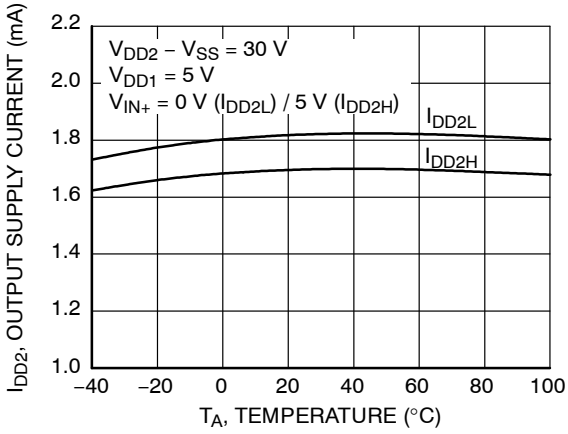

Figure 12. Output Supply Current (I_{DD2}) vs. Temperature

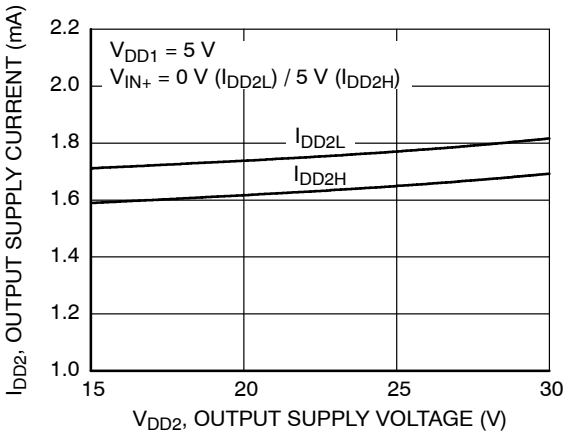

Figure 13. Output Supply Current (I_{DD2}) vs. Output Supply Voltage (V_{DD2})

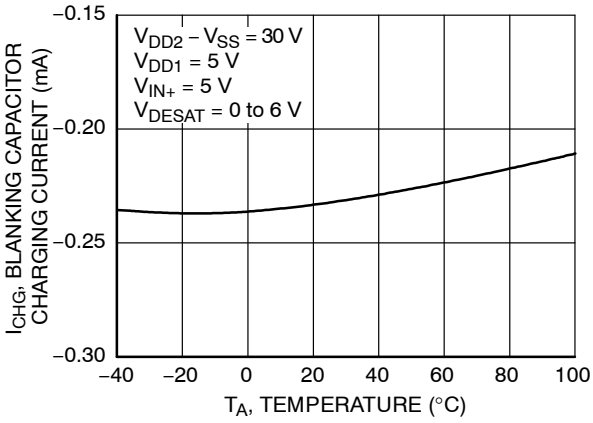

Figure 14. Blanking Capacitor Charge Current (I_{CHG}) vs. Temperature

Downloaded from Arrow.com.

TYPICAL PERFORMANCE CHARACTERISTICS (Continued)

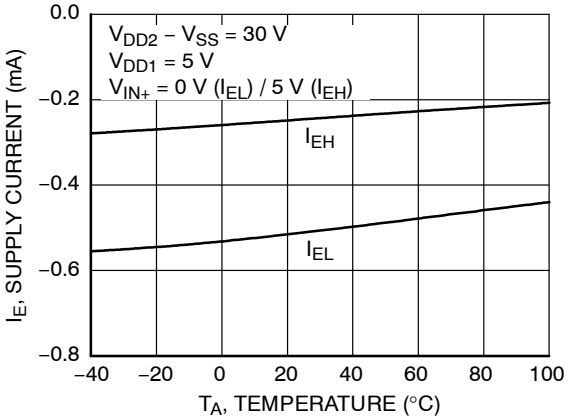

Figure 15. Supply Current (I_E) vs. Temperature

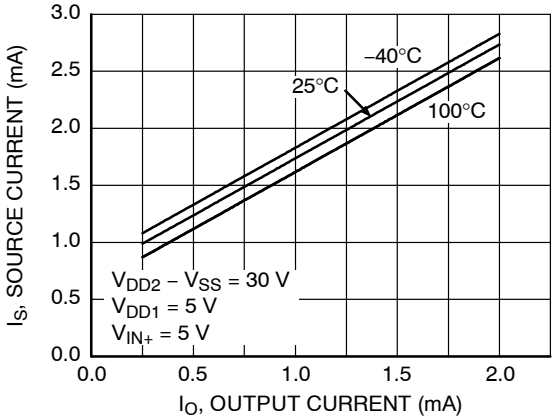

Figure 16. Source Current (I_S) vs. Output Current (I_O)

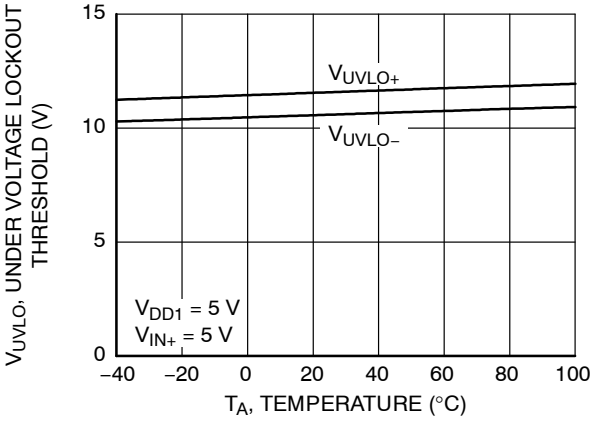

Figure 17. Under Voltage Lockout Threshold (V_{UVLO}) vs. Temperature

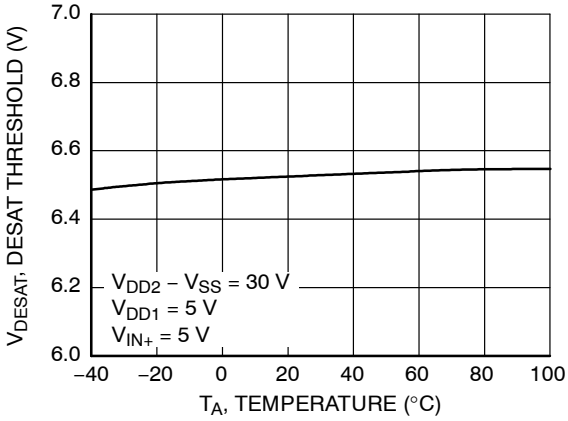

Figure 18. DESAT Threshold (V_{DESAT}) vs. Temperature

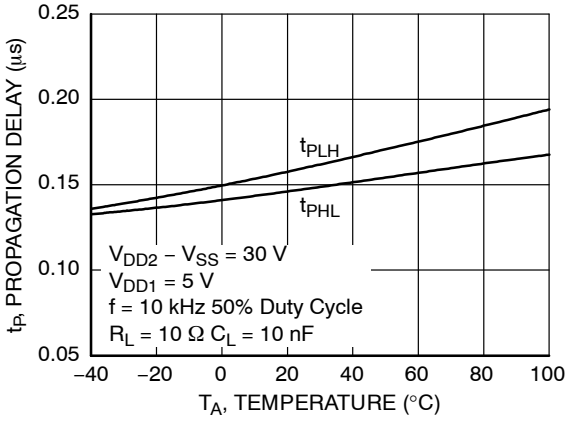

Figure 19. Propagation Delay (t_P) vs. Temperature

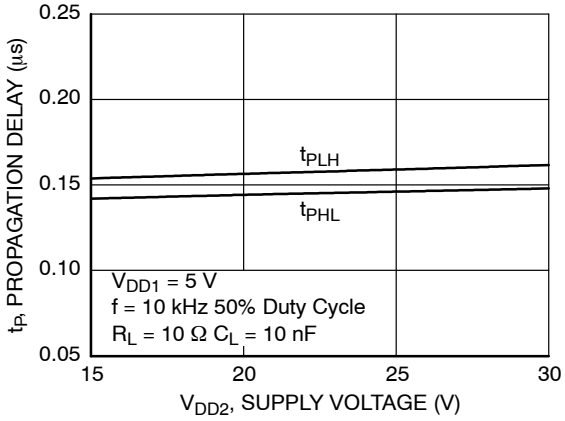

Figure 20. Propagation Delay (t_P) vs. Supply Voltage (V_{DD2})

Downloaded from Arrow.com.

TYPICAL PERFORMANCE CHARACTERISTICS (Continued)

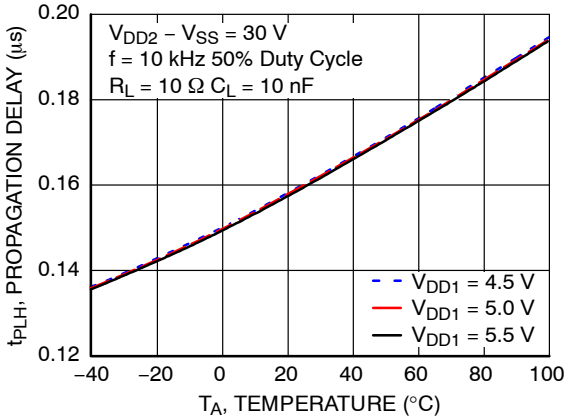

Figure 21. Propagation Delay Time to Logic High Output (t_{PLH}) vs. Temperature

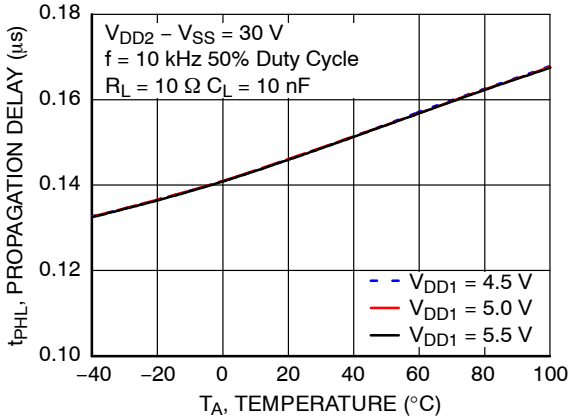

Figure 22. Propagation Delay Time to Logic Low Output (t_{PHL}) vs. Temperature

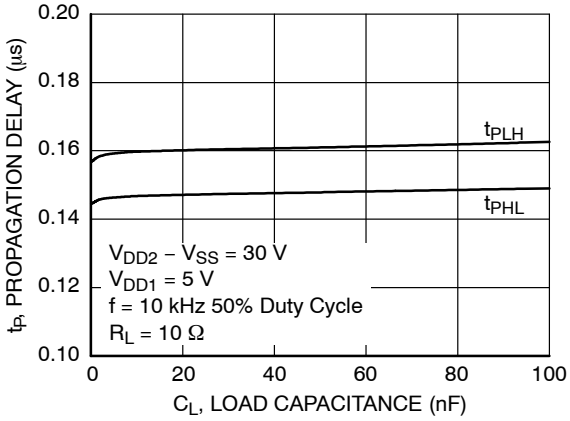

Figure 23. Propagation Delay (t_P) vs. Load Capacitance (C_L)

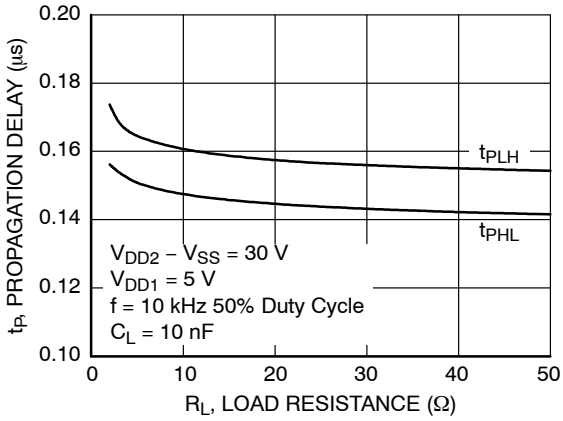

Figure 24. Propagation Delay (t_P) vs. Load Resistance (R_L)

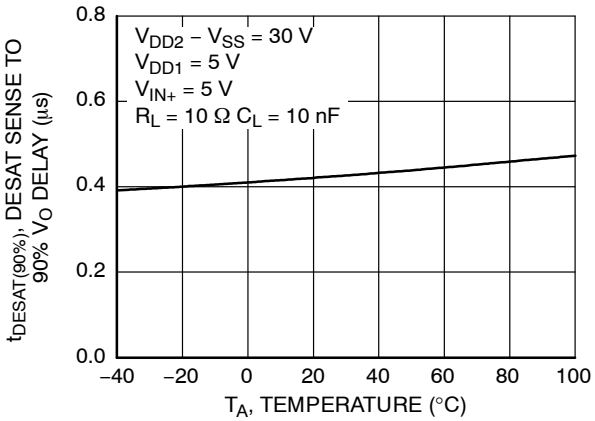

Figure 25. DESAT Sense to 90% V_O Delay ($t_{DESAT(90\%)}$) vs. Temperature

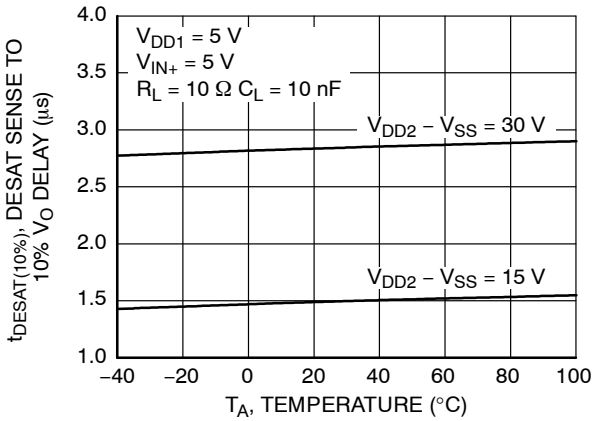

Figure 26. DESAT Sense to 10% V_O Delay ($t_{DESAT(10\%)}$) vs. Temperature

Downloaded from Arrow.com.

TYPICAL PERFORMANCE CHARACTERISTICS (Continued)

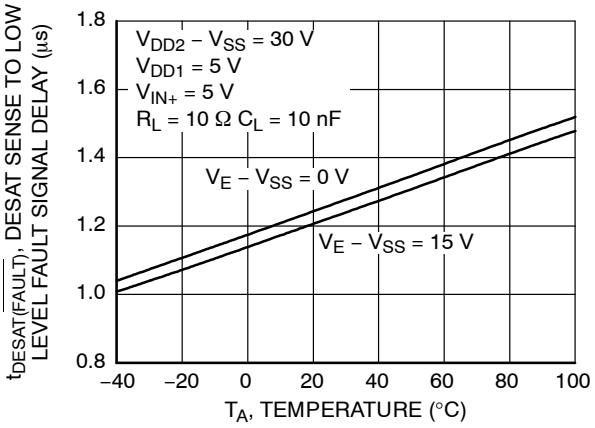

Figure 27. DESAT Sense to Low Level FAULT Signal Delay ($t_{DESAT(\overline{FAULT})}$) vs. Temperature

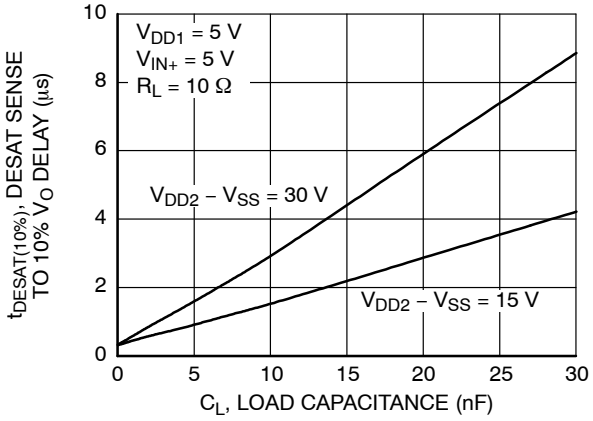

Figure 28. DESAT Sense to 10% V_O Delay ($t_{DESAT(10\%)}$) vs. Load Capacitance (C_L)

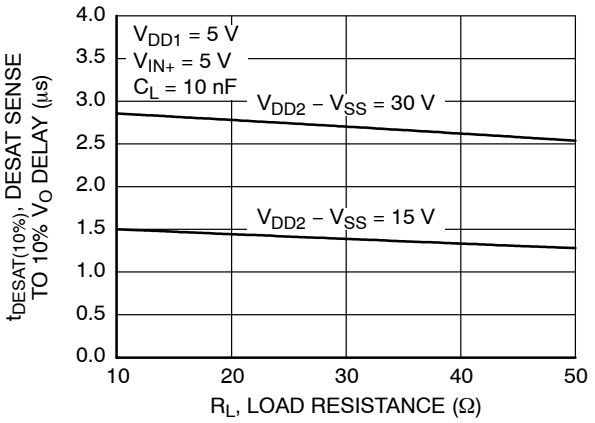

Figure 29. DESAT Sense to 10% V_O Delay ($t_{DESAT(10\%)}$) vs. Load Resistance (R_L)

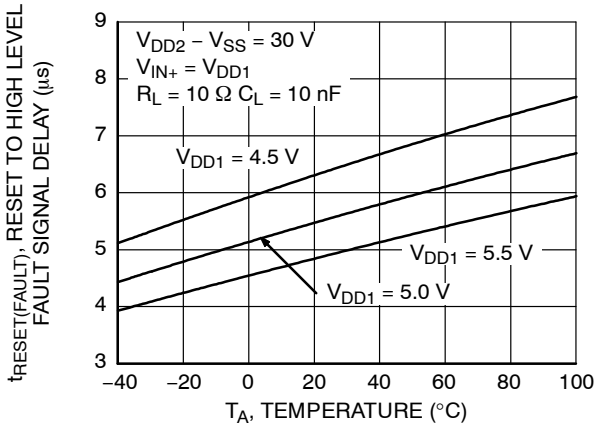

Figure 30. RESET to High Level FAULT Signal Delay ($t_{\overline{RESET}(\overline{FAULT})}$) vs. Temperature

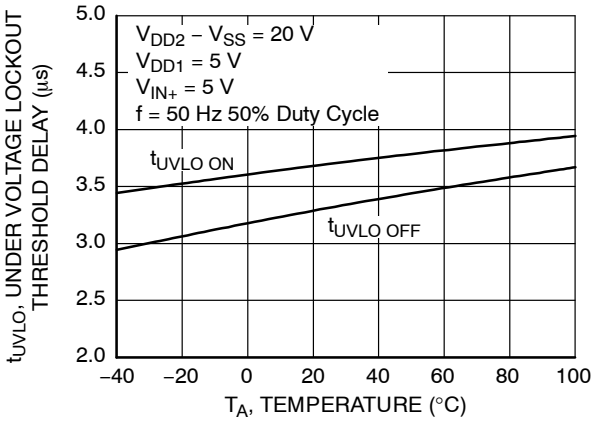

Figure 31. Under Voltage Lockout Threshold Delay (t_{UVLO}) vs. Temperature

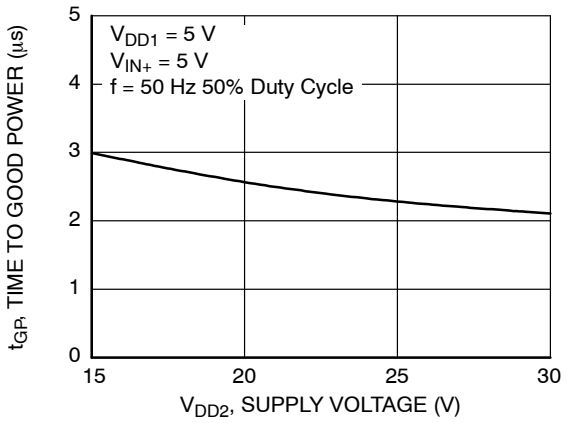

Figure 32. Time to Good Power (t_{GP}) vs. Supply Voltage (V_{DD2})

Downloaded from Arrow.com.

TYPICAL PERFORMANCE CHARACTERISTICS (Continued)

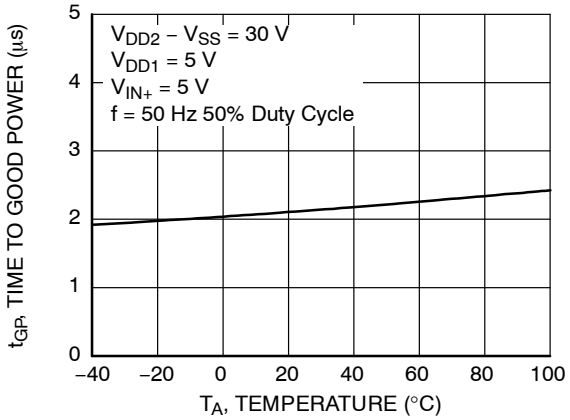

Figure 33. Time to Good Power (t_{GP}) vs. Temperature

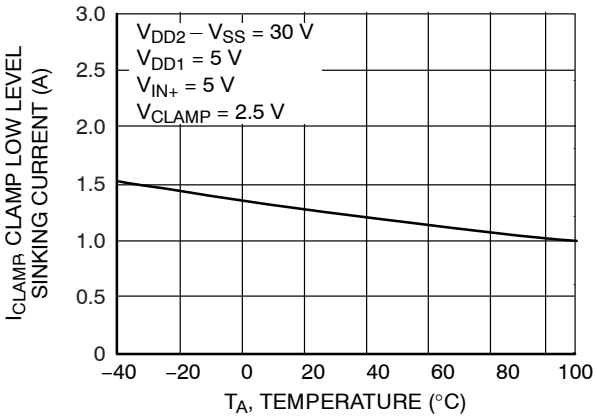

Figure 34. Clamp Low Level Sinking Current (I_{CLAMPL}) vs. Temperature

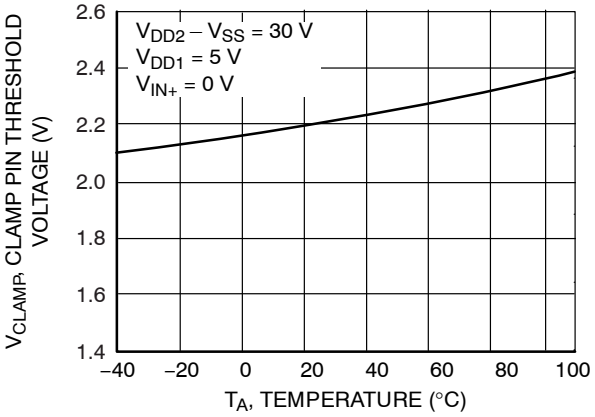

Figure 35. Clamping Threshold Voltage (V_{CLAMP}) vs. Temperature

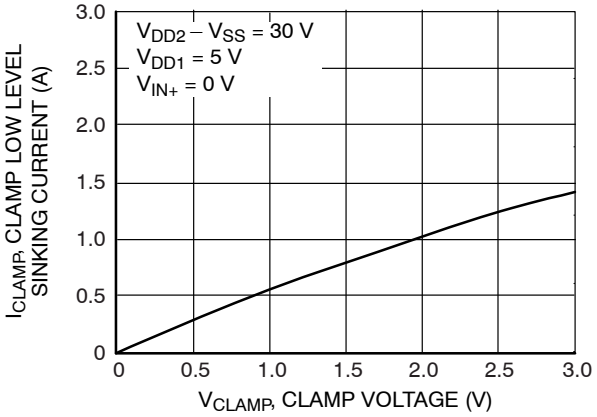

Figure 36. Clamp Low Level Sinking Current (I_{CLAMPL}) vs. Clamp Voltage (V_{CLAMP})

Downloaded from Arrow.com.

TEST CIRCUITS

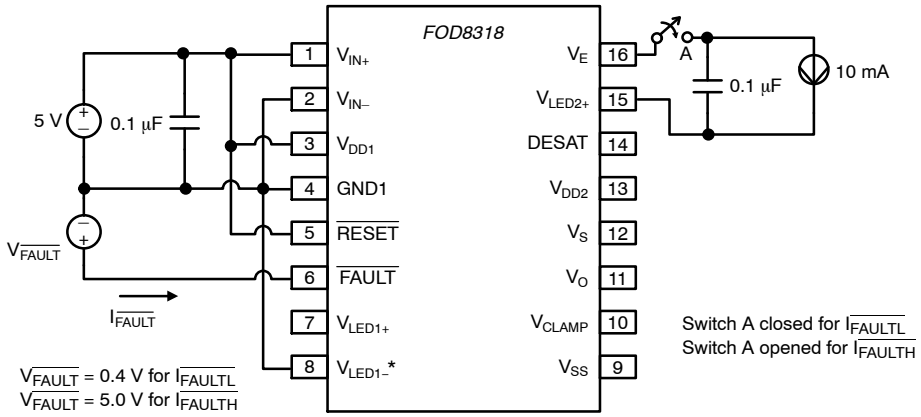

Figure 37. Fault Output Current ($I_{\overline{FAULTL}}$) and ($I_{\overline{FAULTH}}$) Test Circuit

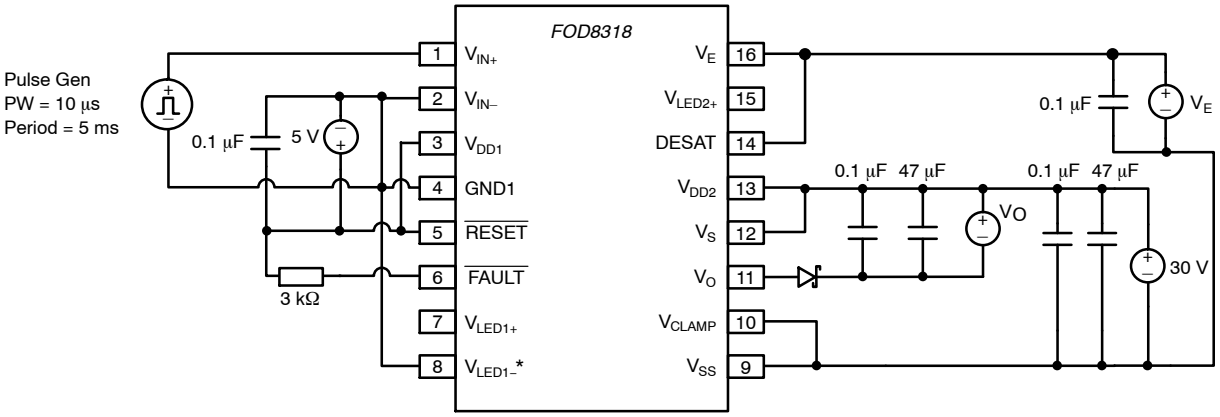

Figure 38. High Level Output Current (I_{OH}) Test Circuit

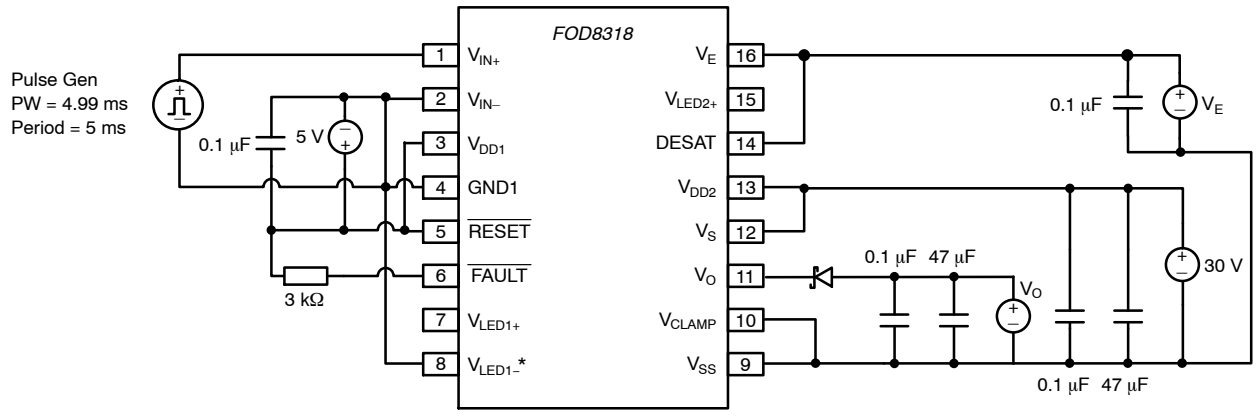

Figure 39. Low Level Output Current (I_{OL}) Test Circuit

Downloaded from Arrow.com.

TEST CIRCUITS (Continued)

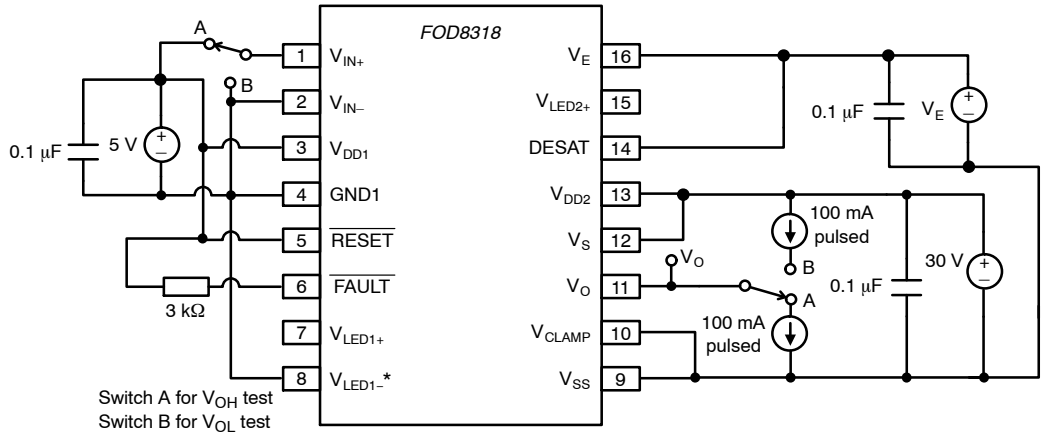

Figure 40. High Level (V_{OH}) and Low Level (V_{OL}) Output Voltage Test Circuit

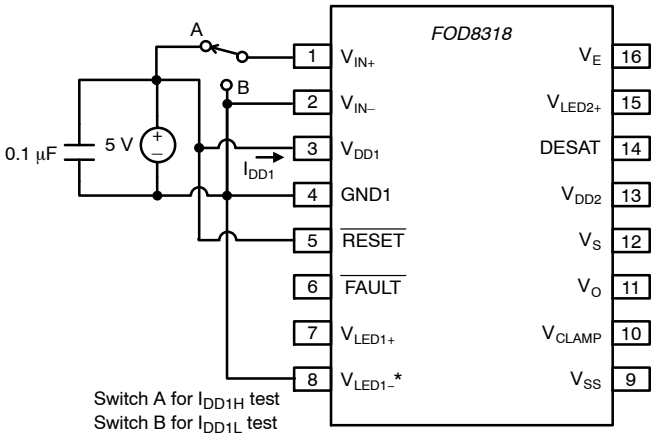

Figure 41. High Level (I_{DD1H}) and Low Level (I_{DD1L}) Supply Current Test Circuit

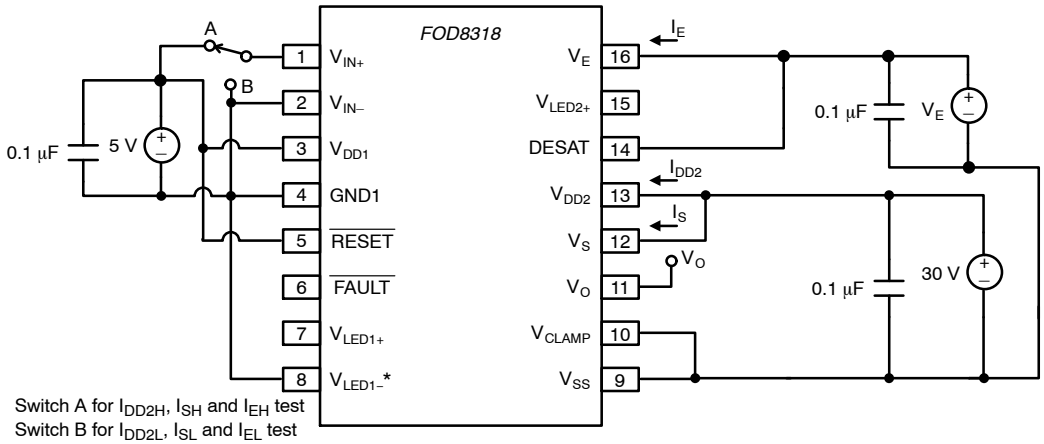

Figure 42. High Level (I_{DD2H}), Low Level (I_{DD2L}) Output Supply Current, High Level (I_{SH}), Low Level (I_{SL}) Source Current, V_E High Level (I_{EH}), and V_E Low Level (I_{EL}) Supply Current Test Circuit

Downloaded from Arrow.com.

TEST CIRCUITS (Continued)

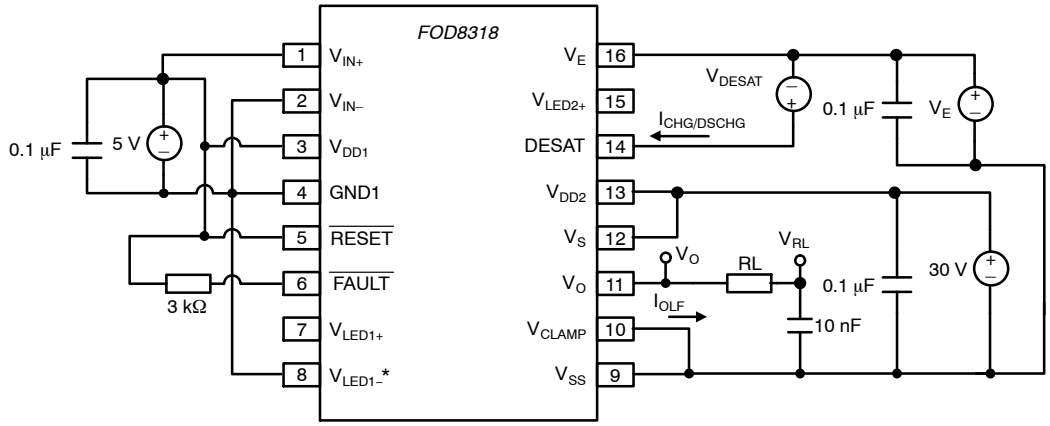

Figure 43. Low Level Output Current During Fault Conditions (I_{OLF}), Blanking Capacitor Charge Current (I_{CHG}), Blanking Capacitor Discharging Current (I_{DSCHG}), and DESAT Threshold (V_{DESAT}) Test Circuit

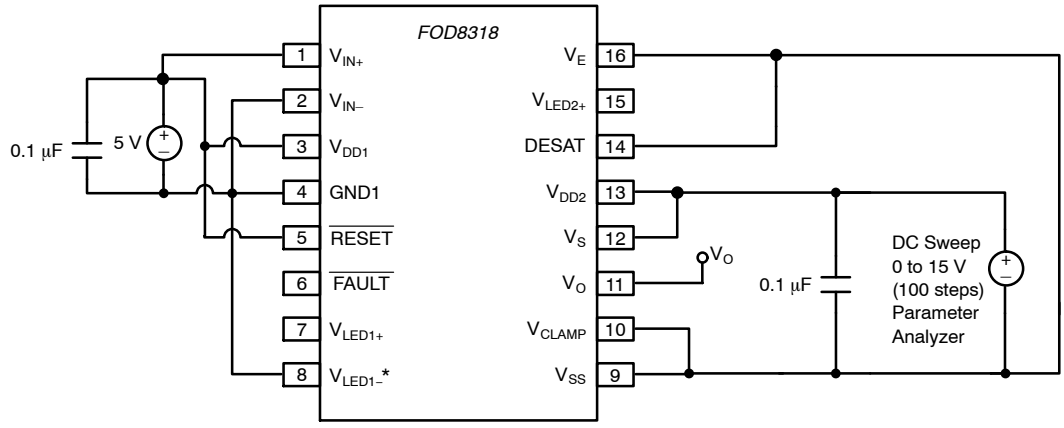

Figure 44. Under−Voltage Lockout Threshold (V_{UVLO}) Test Circuit

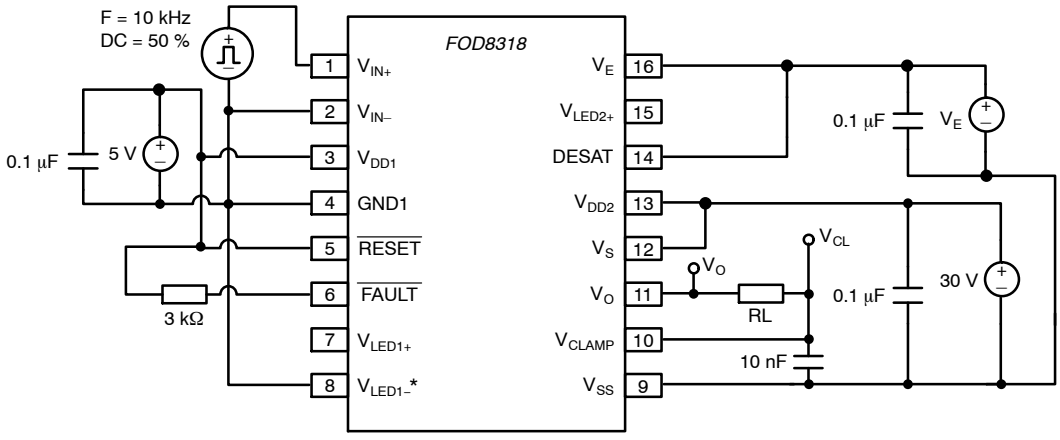

Figure 45. Propagation Delay (t_{PLH}, t_{PHL}), Pulse Width Distortion (PWD), Rise Time (t_R), and Fall Time (t_F) Test Circuit

Downloaded from Arrow.com.

TEST CIRCUITS (Continued)

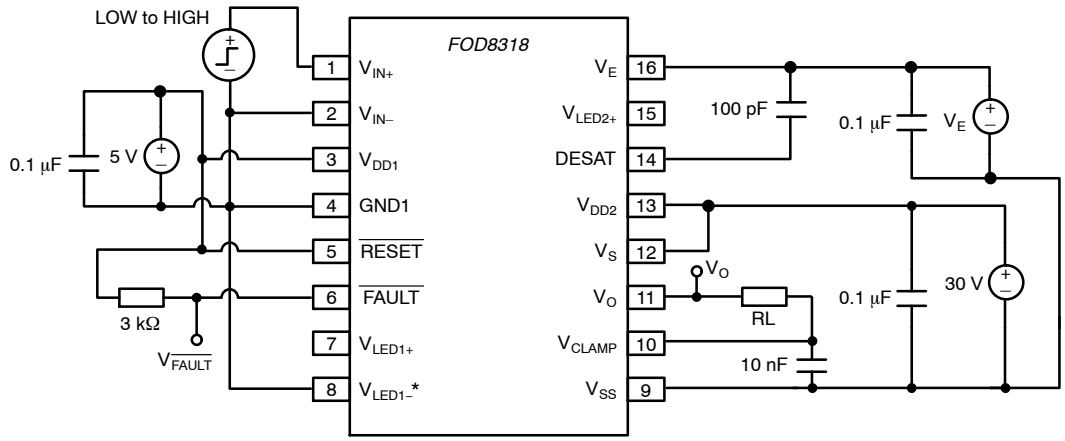

Figure 46. DESAT Sense ($t_{DESAT(90\ \%)}$, $t_{DESAT(10\ \%)}$), DESAT Fault ($t_{DESAT(\overline{FAULT})}$), and ($t_{DESAT(LOW)}$) Test Circuit

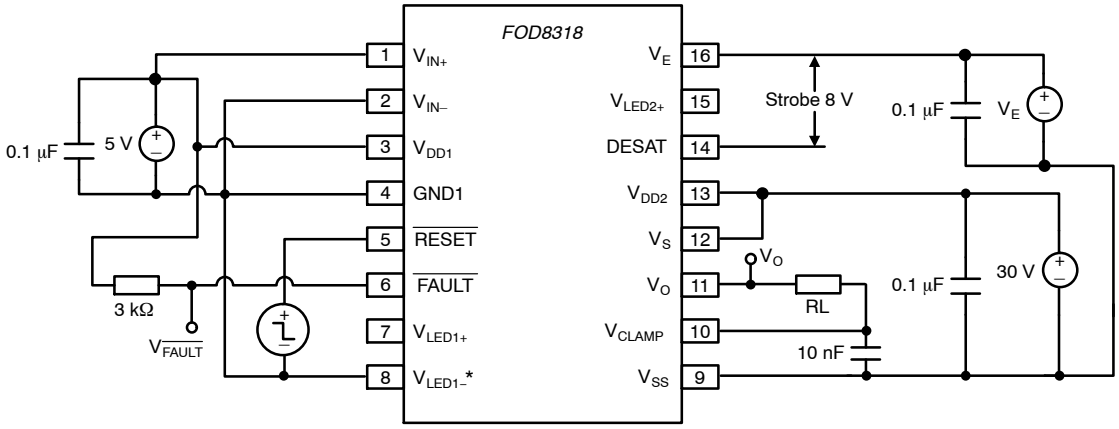

Figure 47. Reset Delay ($t_{\overline{RESET}(\overline{FAULT})}$) Test Circuit

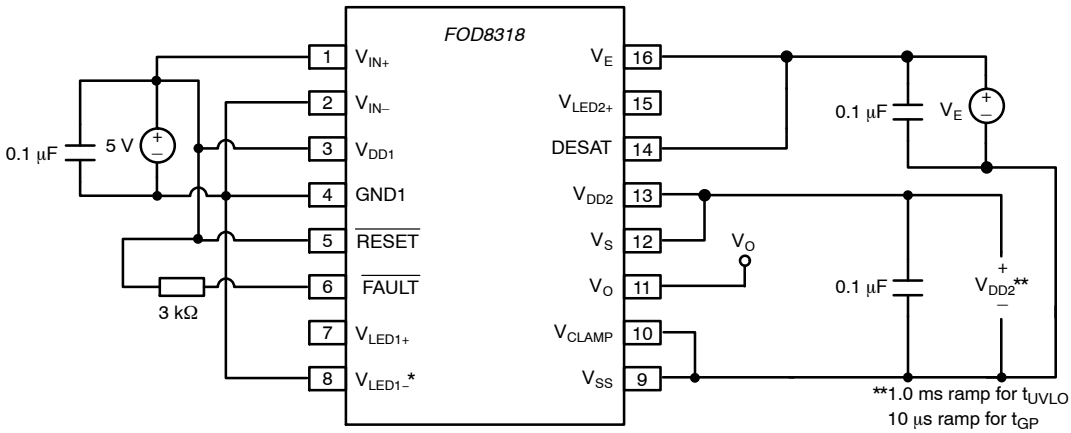

Figure 48. Under−Voltage Lockout Delay (t_{UVLO}) and Time to Good Power (t_{GP}) Test Circuit

Downloaded from Arrow.com.

TEST CIRCUITS (Continued)

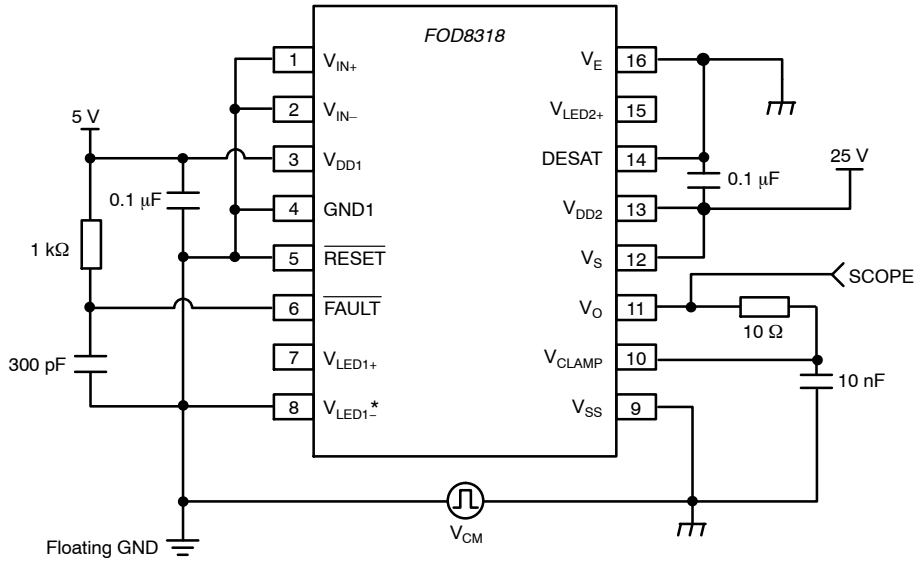

Figure 49. Common Mode Low (CM_L) Test Circuit at LED1 Off

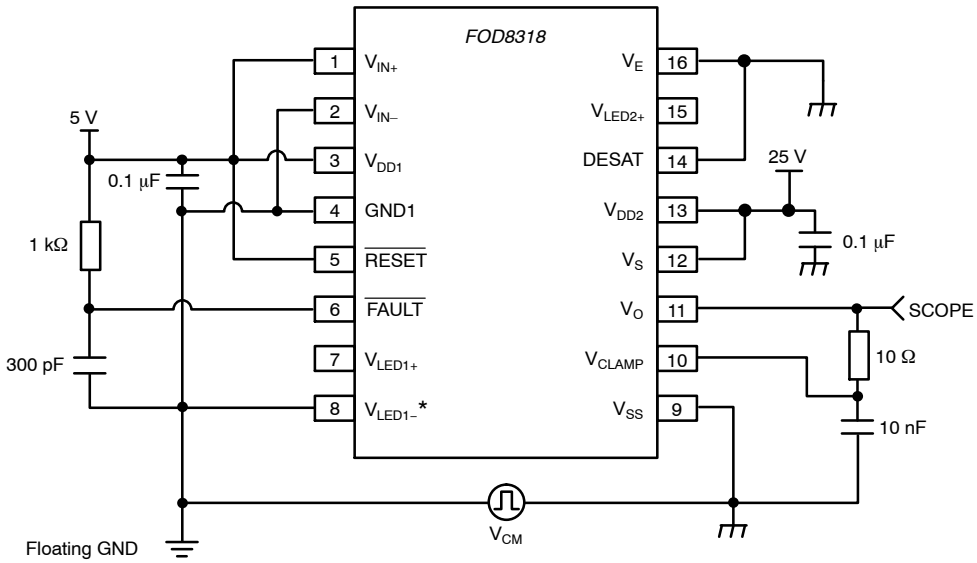

Figure 50. Common Mode High (CM_H) Test Circuit at LED1 On

Downloaded from Arrow.com.

TEST CIRCUITS (Continued)

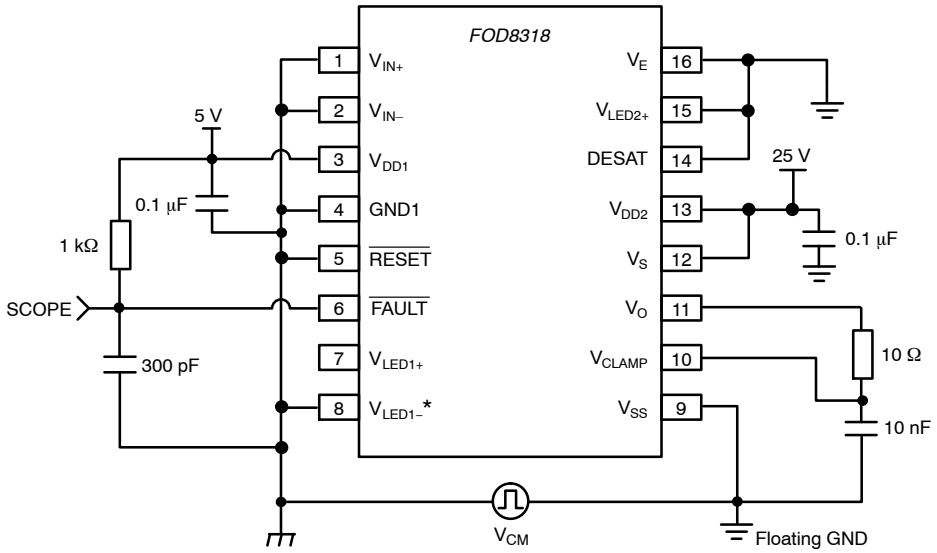

Figure 51. Common Mode High (CM_H) Test Circuit at LED2 Off

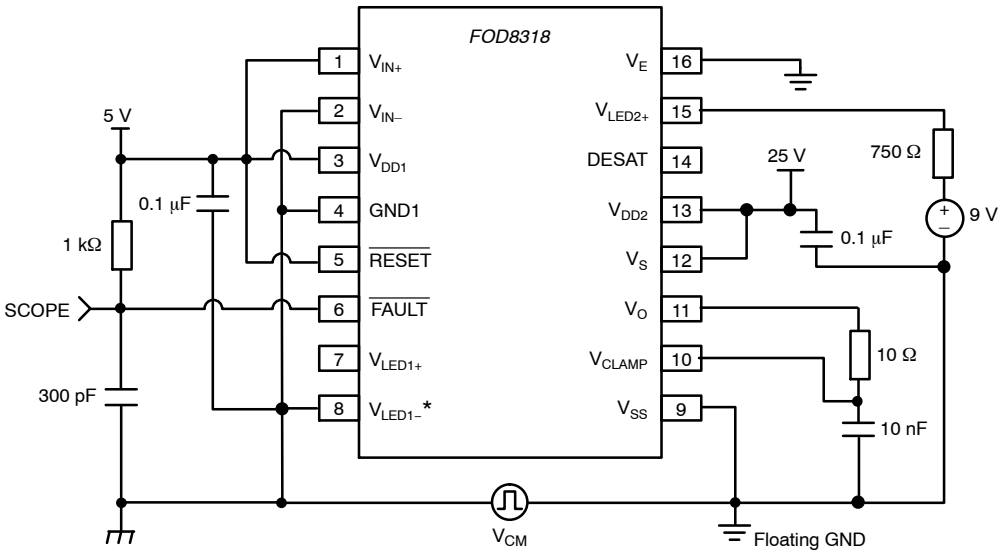

Figure 52. Common Mode Low (CM_L) Test Circuit at LED2 On

Downloaded from Arrow.com.

TEST CIRCUITS (Continued)

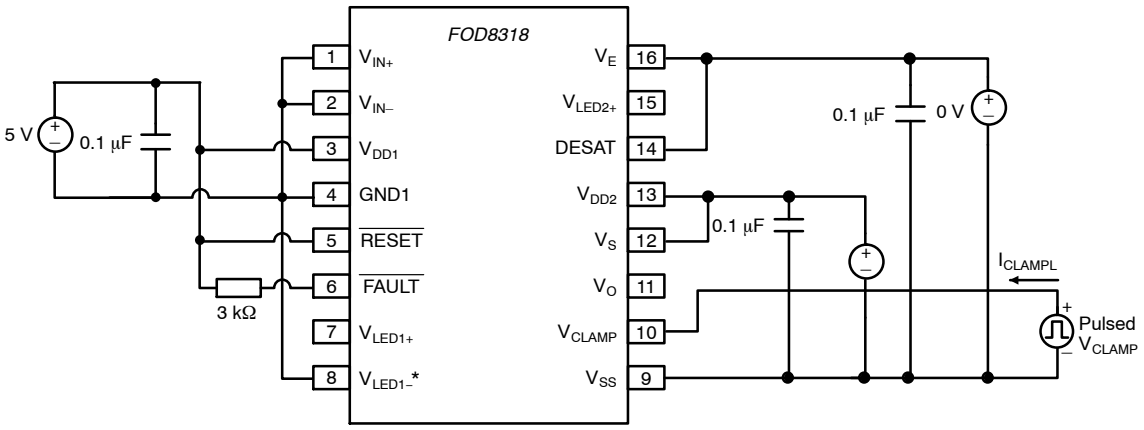

Figure 53. Clamp Low Level Sinking Current (I_{CLAMPL})

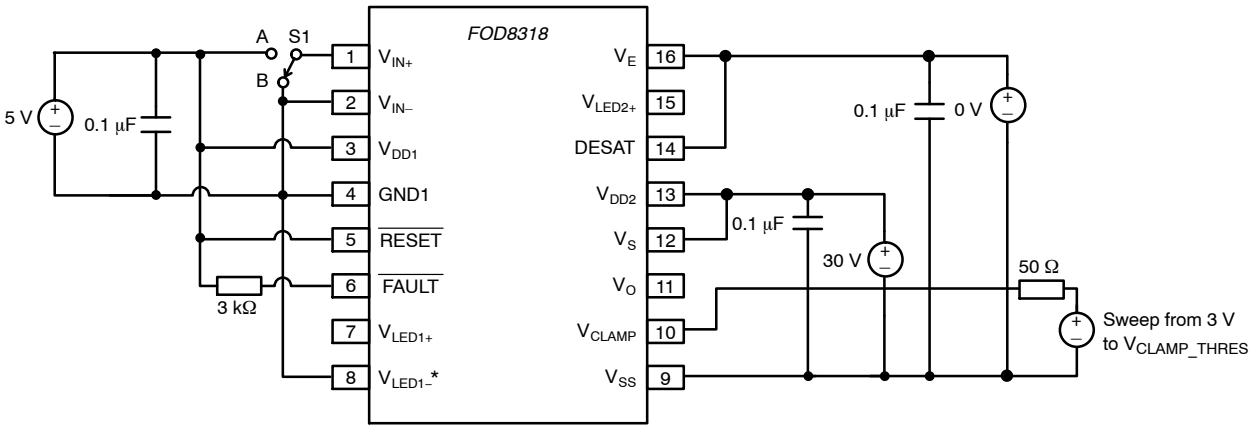

Initially set S1 to A before connecting 3 V to clamp pin. Then switch to B before sweeping down to get the V_{CLAMP_THRES}, clamping threshold voltage.

Figure 54. Clamp Pin Threshold Voltage (V_{CLAMP})

Downloaded from Arrow.com.

TIMING DIAGRAMS

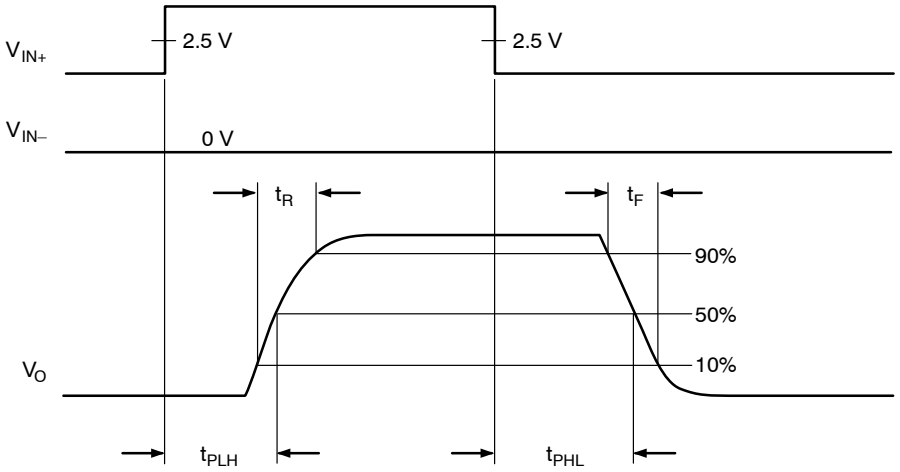

Figure 55. Propagation Delay (t_{PLH}, t_{PHL}), Rise Time (t_R), and Fall Time (t_F) Timing Diagram

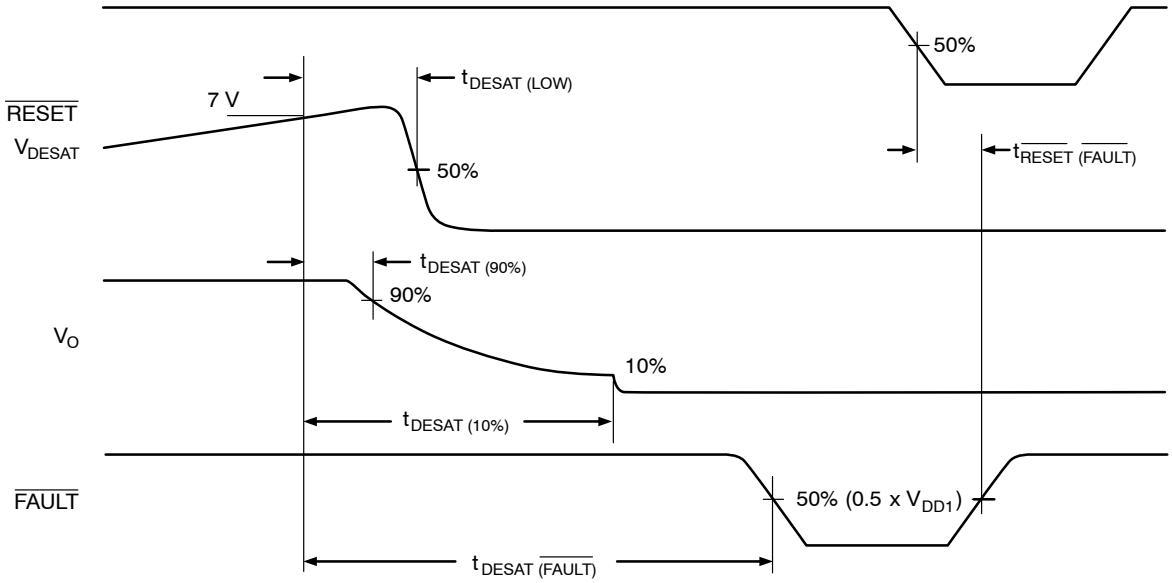

Figure 56. Definitions for Fault Reset Input ($\overline{RESET}$), Desaturation Voltage Input (DESAT), Output Voltage (V_O), and Fault Output ($\overline{FAULT}$) Timing Waveforms

Downloaded from Arrow.com.

APPLICATION INFORMATION

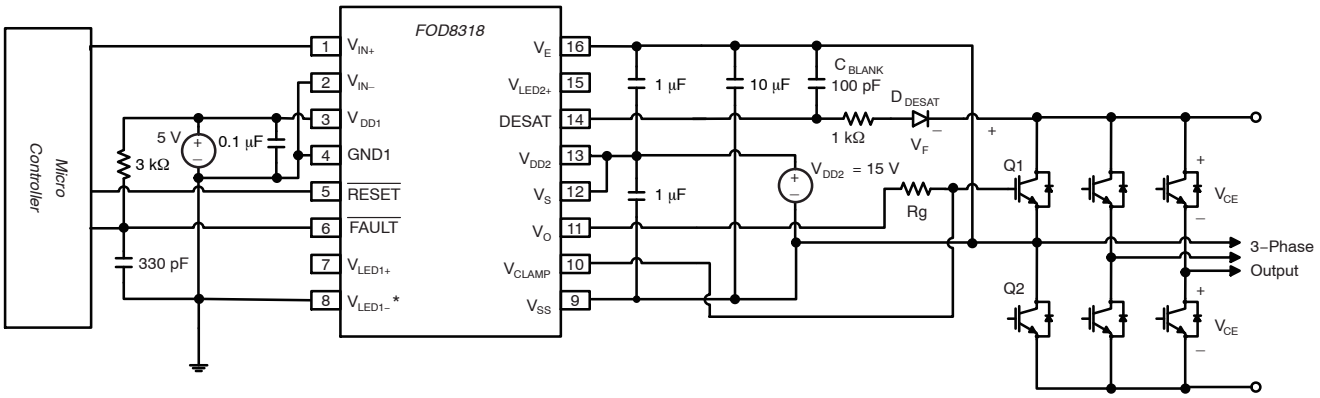

Figure 57. Recommended Application Circuit

Functional Description

The functional behavioral of FOD8318 is illustrated by the detailed internal schematic shown in Figure 58. This explains the interaction and sequence of internal and external signals, together with the timing diagrams.

Non−Inverting and Inverting Inputs

There are two CMOS/TTL−compatible inputs, V_{IN+} and V_{IN-}, to control the IGBT in non−inverting and inverting configurations, respectively. When V_{IN-} is set to LOW state, V_{IN+} controls the driver output, VO, in non−inverting configuration. When VIN+ is set to HIGH state, V_{IN-} controls the driver output in inverting configuration.

The relationship between the inputs and output are illustrated in the Figure 59.

During normal operation, when no fault is detected, the $\overline{\text{FAULT}}$ output, which is an open−drain configuration, is latched to HIGH state. This allows the gate driver to be controlled by the input logic signal.

When a fault is detected, the $\overline{\text{FAULT}}$ output is latched to LOW state. This condition remains until the input logic is pulled to LOW and the $\overline{\text{RESET}}$ pin is also pulled LOW for a period longer than $PW_{\overline{\text{RESET}}}$.

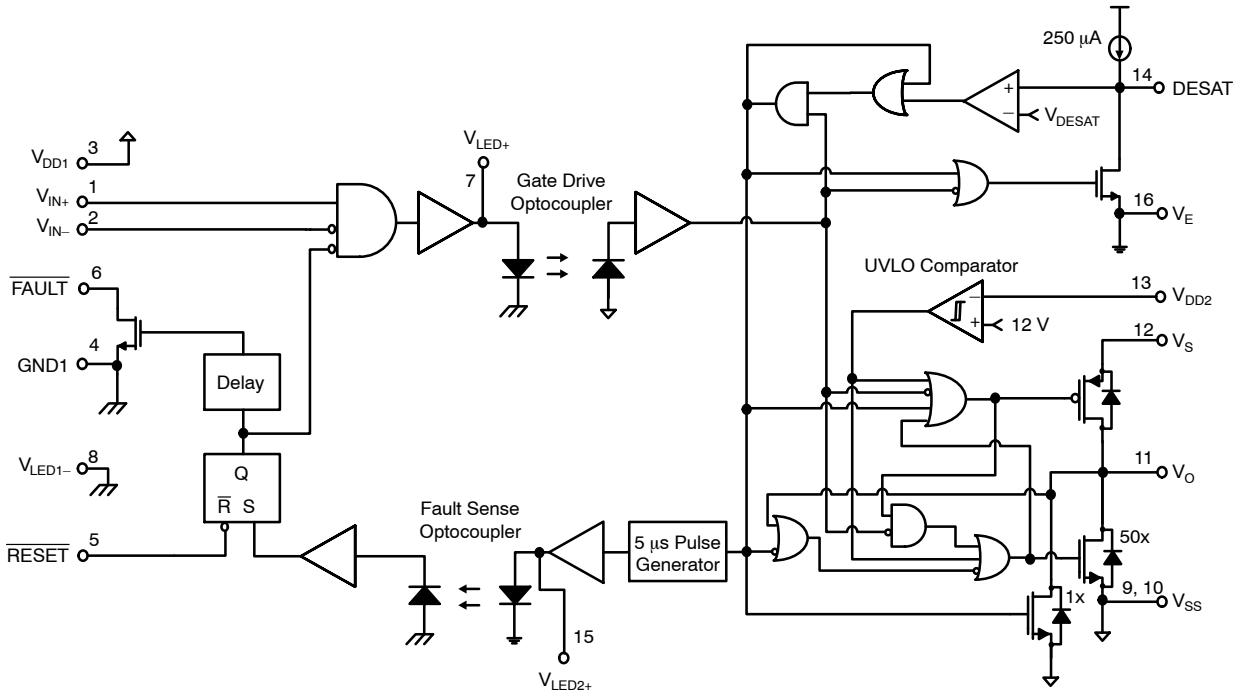

Figure 58. Detailed Internal Schematic

Downloaded from Arrow.com.

Gate Driver Output

A pair of PMOS and NMOS comprise the output driver stage, which facilitates close to rail−to−rail output swing. This feature allows a tight control of gate voltage during on−state and short−circuit condition. The output driver is typically to sink 2 A and source 2 A at room temperature. Due to the low $R_{DS(ON)}$ of the MOSFETs, the power dissipation is reduced as compared to those bipolar−type driver output stages. The absolute maximum rating of the output peak current, $I_{O(PEAK)}$, is 3 A; therefore the careful selection of the gate resistor, Rg, is required to limit the short−circuit current of the IGBT.

As shown in Figure 58, gate driver output is influenced by signals from the photodetector circuitry, the UVLO comparator, and the DESAT signals. Under no−fault condition, normal operation resumes while the supply voltage is above the UVLO threshold, the output of the photodetector drives the MOSFETs of the output stage.

The logic circuitry of the output stage ensures that the push−pull devices are never "ON" simultaneously. When the output of the photodetector is HIGH, the output, V_O, is pulled to HIGH state by turning on the PMOS. When the output of the photodetector is LOW, V_O is pulled to LOW state by turning on the NMOS.

When V_{DD2} supply goes below V_{UVLO}, which is the designated UVLO threshold at the comparator, V_O is pulled down to LOW state regardless of photodetector output.

When desaturation is detected, V_O turns off slowly as it is pulled LOW by the 1XNMOS device. The input to the fault sense circuitry is latched to HIGH state and turns on the LED. When V_O goes below 2 V, the 50XNMOS device turns on again, clamping the IGBT gate firmly to V_{SS}. The Fault Sense signal remains latched in the HIGH state until the LED of the gate driver circuitry turns off.

Desaturation Protection, FAULT Output

Desaturation detection protection ensures the protection of the IGBT at short−circuit by monitoring the collector−emitter voltage of the IGBT in the half bridge. When the DESAT voltage goes up and reaches above the threshold voltage, a short−circuit condition is detected and the driver output stage executes a "soft" IGBT turn−off and is eventually driven LOW, as illustrated in Figure 60. The $\overline{\text{FAULT}}$ open−drain output is triggered active LOW to report a desaturation error. It is only cleared by activating active LOW by the external controller to the $\overline{\text{RESET}}$ input with the input logic is pulled to LOW.

The DESAT fault detector should be disabled for a short period (blanking time) before the IGBT turns on to allow the collector voltage to fall below DESAT threshold. This blanking period protects against false trigger of the DESAT while the IGBT is turning on.

The blanking time is controlled by the internal DESAT charge current, the DESAT voltage threshold, and the external DESAT capacitor (capacitor between DESAT and V_E pin). The nominal blanking time can be calculated using external capacitance (C_{BLANK}), FAULT threshold voltage (V_{DESAT}), and DESAT charge current (I_{CHG}) as:

$$t_{BLANK} = C_{BLANK} \times V_{DESAT} / I_{CHG} \quad \text{(eq. 1)}$$

With a recommended 100 pF DESAT capacitor, the nominal blanking time is:

$$100\ \text{pF} \times 7\ \text{V} / 250\ \mu\text{A} = 2.8\ \mu\text{s}$$

"Soft" Turn−Off

The soft turn−off feature ensures the safe turn off of the IGBT under fault conditions. This reduces the voltage spike on the collector of the IGBT. Without this, the IGBT would see a heavy spike on the collector and result in permanent damage to the device.

Under−Voltage Lockout

Under−voltage detection prevents the application of insufficient gate voltage to the IGBT. This could be dangerous, as it would drive the IGBT out of saturation and into the linear operation where the losses are very high and quickly overheated. This feature ensures the proper operating of the IGBTs. The output voltage, V_O, remains LOW regardless of the inputs as long as the supply voltage, $V_{DD2} - V_E$, is less than V_{UVLO+}. When the supply voltage falls below V_{UVLO-}, V_O goes LOW, as illustrated in Figure 61.

Active Miller Clamp Function

An active Miller clamp feature allows the sinking of the Miller current to the ground or emitter of the IGBT during a high−dV/dt situation. Instead of driving the IGBT gate to a negative supply voltage to increase the safety margin, the device has a dedicated V_{CLAMP} pin to control the Miller current. During turn−off, the gate voltage of the IGBT is monitored and the V_{CLAMP} output is activated when the gate voltage goes below 2 V (relative to V_{SS}). The Miller clamp NMOS transistor is then turned on and provides a low resistive path for the Miller current. This helps prevent a self−turn−on due to the parasitic Miller capacitor in power switches. The clamp voltage is V_{OL} + 2.5 V maximum for a Miller current up to 1200 mA. In this way, the V_{CLAMP} function does not affect the turn−off characteristic. It helps to clamp the gate to the LOW level throughout the turn−off time. During turn−on, where the input of the driver is activated, the V_{CLAMP} function is disabled or opened.

Time to Good Power

At initial power up, the LED is off and the output of the gate driver should be in the LOW state. Sometimes race conditions exist that causes the output to follow the V_E (assuming V_{DD2} and V_E are connected externally), until all of the circuits in the output IC have stabilized. This condition can result in output transitions or transients that are coupled to the driven IGBT. These glitches can cause the high−side and low−side IGBTs to conduct shoot−through current that may result in destructive damage to the power semiconductor devices. ON has introduced a initial turn−on

Downloaded from Arrow.com.

delay, generally called “time−to−good power”. This delay, typically 2.5 μs, is only present during the initial power−up of the device. Once powered, the “time−to−good power” delay is determined by the delay of the UVLO circuitry. If the LED is “ON” during the initial turn−on activation, LOW−to−HIGH transition at the output of the gate driver only occurs 2.5 μs after the V_{DD2} power is applied.

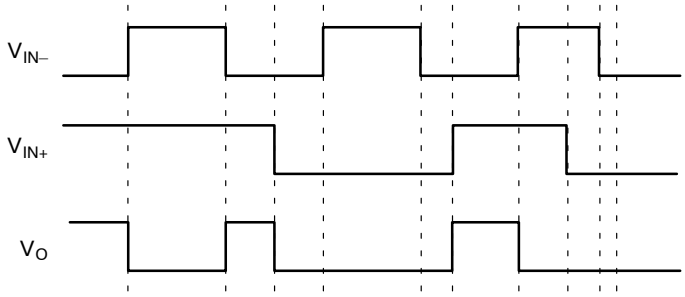

Figure 59. Input/Output Relationship

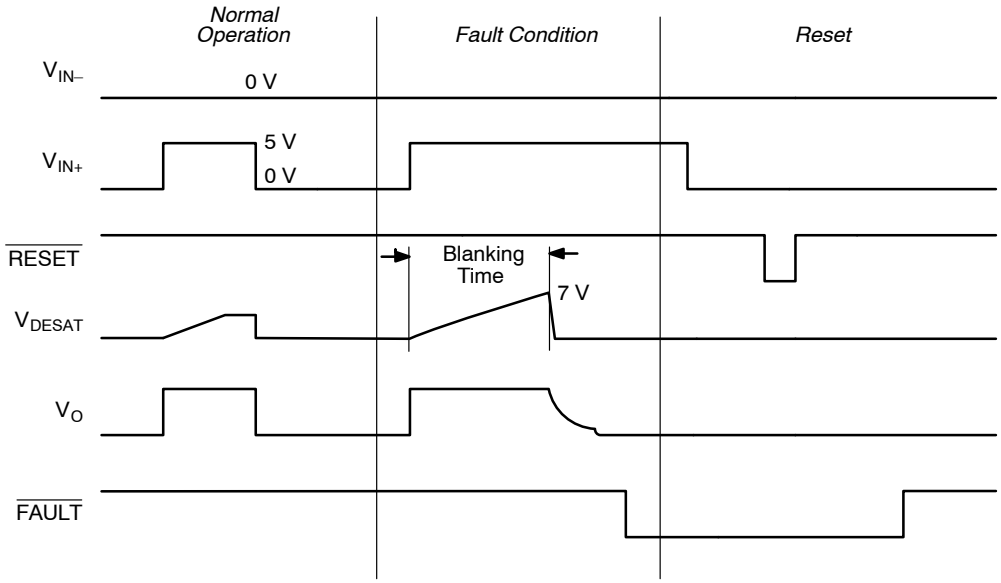

Figure 60. Timing Relationship Among DESAT, $\overline{\text{FAULT}}$, and $\overline{\text{RESET}}$

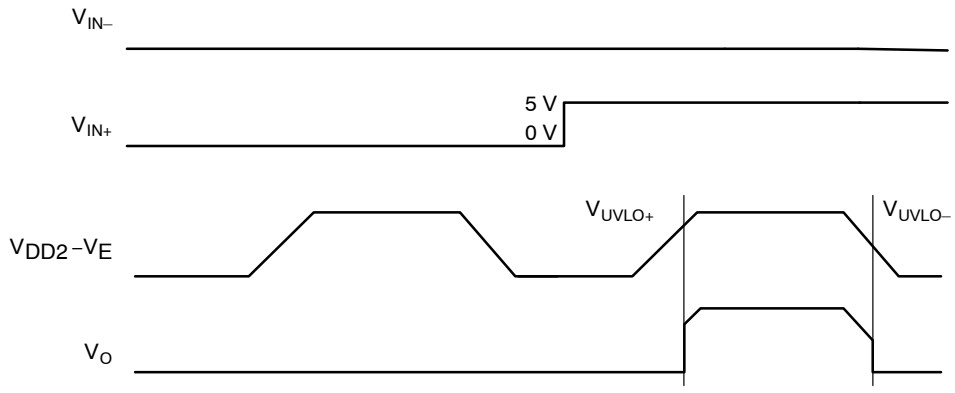

Figure 61. UVLO for Output Side

Downloaded from Arrow.com.

REFLOW PROFILE

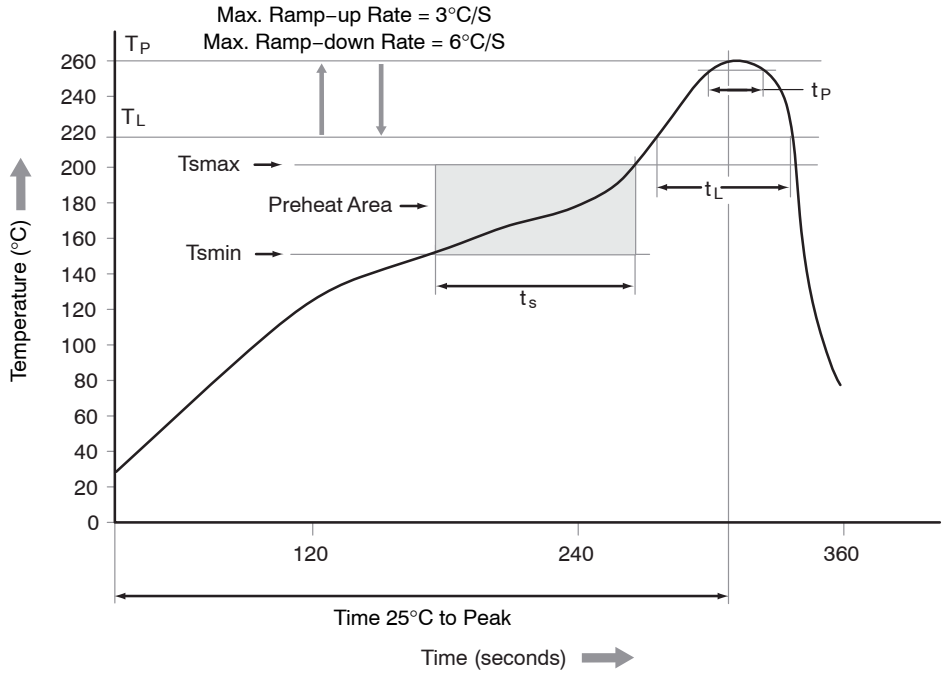

Profile Freature	Pb−Free Assembly Profile
Temperature Minimum (T_{smin})	150°C
Temperature Maximum (T_{smax})	200°C
Time (t_S) from (T_{smin} to T_{smax})	60 – 120 seconds
Ramp−up Rate (t_L to t_P)	3°C/second max.
Liquidous Temperature (T_L)	217°C
Time (t_L) Maintained Above (T_L)	60 – 150 seconds
Peak Body Package Temperature	260°C +0°C / –5°C
Time (t_P) within 5°C of 260°C	30 seconds
Ramp−down Rate (T_P to T_L)	6°C/second max.
Time 25°C to Peak Temperature	8 minutes max.

Figure 62. Reflow Profile

Downloaded from Arrow.com.

ORDERING INFORMATION

Part Number	Package	Shipping†
FOD8318	SOIC16 W, SO 16−Pin (Pb−Free)	50 Units / Tube
FOD8318R2	SOIC16 W, SO 16−Pin (Pb−Free)	750 Units / Tape & Reel
FOD8318V	SOIC16 W, SO 16−Pin, DIN EN/IEC 60747−5−5 Option (Pb−Free)	50 Units / Tube
FOD8318R2V	SOIC16 W, SO 16−Pin, DIN EN/IEC 60747−5−5 Option (Pb−Free)	750 Units / Tape & Reel

†For information on tape and reel specifications, including part orientation and tape sizes, please refer to our Tape and Reel Packaging Specifications Brochure, BRD8011/D.

30. All packages are lead free per JEDEC: J−STD−020B standard.

OPTOPLANAR is registered trademarks of Semiconductor Components Industries, LLC dba “**onsemi**” or its affiliates and/or subsidiaries in the United States and/or other countries.

Downloaded from Arrow.com.

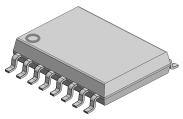

SOIC16 W
CASE 751EN
ISSUE A

DATE 24 AUG 2021

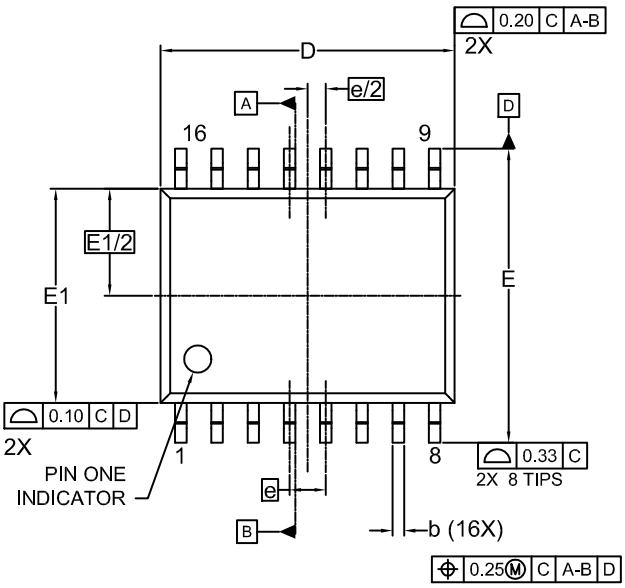

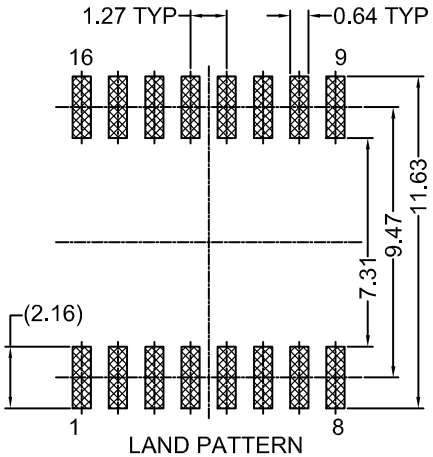

LAND PATTERN
RECOMMENDATION

*FOR ADDITIONAL INFORMATION ON OUR PB-FREE STRATEGY AND SOLDERING DETAILS, PLEASE DOWNLOAD THE ON SEMICONDUCTOR SOLDERING AND MOUNTING TECHNIQUES REFERENCE MANUAL, SOLDERRM/D.

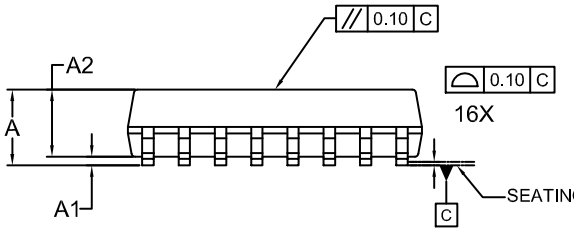

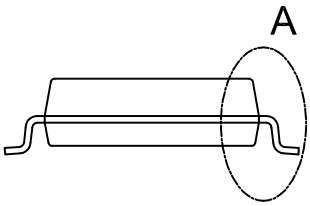

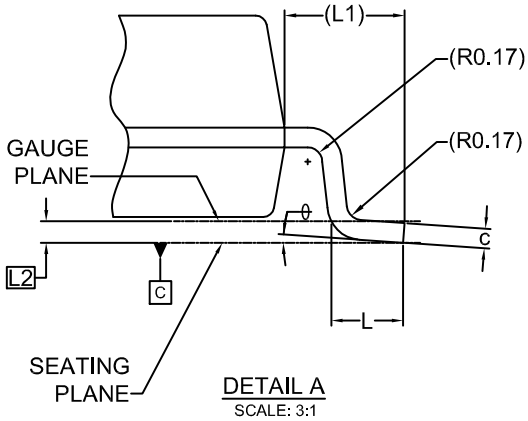

DETAIL A
SCALE: 3:1

NOTES: UNLESS OTHERWISE SPECIFIED

A) DRAWING REFERS TO JEDEC MS-013, VARIATION AA.
B) ALL DIMENSIONS ARE IN MILLIMETERS.
C) DIMENSIONS ARE EXCLUSIVE OF BURRS, MOLD FLASH AND TIE BAR PROTRUSIONS
D) DRAWING CONFORMS TO ASME Y14.5M-1994
E) LAND PATTERN STANDARD: SOIC127P1030X275-16N
F) DRAWING FILE NAME: MKT-M16FREV2
G) OPTOCOUPLER COMES IN WHITE MOLD BODY.

DIM	MILLIMETER		
	MIN.	NOM.	MAX.
A	–	–	3.00
A1	0.15	0.30	0.45
A2	2.25	2.35	2.45
b	0.31	0.41	0.51
c	0.19	0.22	0.25
D	10.20	10.30	10.40
E	10.10	10.30	10.50
E1	7.40	7.50	7.60
E1/2	3.75 BSC		
e	1.27 BSC		
e/2	0.635 BSC		
L	0.40	0.84	1.27
L1	1.42 REF		
L2	0.25 BSC		
θ	0°	–	8°

GENERIC MARKING DIAGRAM*

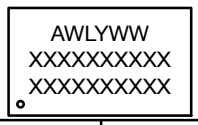

XXXX = Specific Device Code
A = Assembly Location
WL = Wafer Lot
Y = Year
WW = Work Week

*This information is generic. Please refer to device data sheet for actual part marking. Pb−Free indicator, “G” or microdot “▪”, may or may not be present. Some products may not follow the Generic Marking.

DOCUMENT NUMBER:	**98AON13751G**	Electronic versions are uncontrolled except when accessed directly from the Document Repository. Printed versions are uncontrolled except when stamped “CONTROLLED COPY” in red.
DESCRIPTION:	**SOIC16 W**	**PAGE 1 OF 1**

onsemi and onsemi are trademarks of Semiconductor Components Industries, LLC dba **onsemi** or its subsidiaries in the United States and/or other countries. **onsemi** reserves the right to make changes without further notice to any products herein. **onsemi** makes no warranty, representation or guarantee regarding the suitability of its products for any particular purpose, nor does **onsemi** assume any liability arising out of the application or use of any product or circuit, and specifically disclaims any and all liability, including without limitation special, consequential or incidental damages. **onsemi** does not convey any license under its patent rights nor the rights of others.

Downloaded from Arrow.com.

onsemi, ONSEMI , and other names, marks, and brands are registered and/or common law trademarks of Semiconductor Components Industries, LLC dba "**onsemi**" or its affiliates and/or subsidiaries in the United States and/or other countries. **onsemi** owns the rights to a number of patents, trademarks, copyrights, trade secrets, and other intellectual property. A listing of **onsemi**'s product/patent coverage may be accessed at www.onsemi.com/site/pdf/Patent−Marking.pdf. **onsemi** reserves the right to make changes at any time to any products or information herein, without notice. The information herein is provided "as−is" and **onsemi** makes no warranty, representation or guarantee regarding the accuracy of the information, product features, availability, functionality, or suitability of its products for any particular purpose, nor does **onsemi** assume any liability arising out of the application or use of any product or circuit, and specifically disclaims any and all liability, including without limitation special, consequential or incidental damages. Buyer is responsible for its products and applications using **onsemi** products, including compliance with all laws, regulations and safety requirements or standards, regardless of any support or applications information provided by **onsemi**. "Typical" parameters which may be provided in **onsemi** data sheets and/or specifications can and do vary in different applications and actual performance may vary over time. All operating parameters, including "Typicals" must be validated for each customer application by customer's technical experts. **onsemi** does not convey any license under any of its intellectual property rights nor the rights of others. **onsemi** products are not designed, intended, or authorized for use as a critical component in life support systems or any FDA Class 3 medical devices or medical devices with a same or similar classification in a foreign jurisdiction or any devices intended for implantation in the human body. Should Buyer purchase or use **onsemi** products for any such unintended or unauthorized application, Buyer shall indemnify and hold **onsemi** and its officers, employees, subsidiaries, affiliates, and distributors harmless against all claims, costs, damages, and expenses, and reasonable attorney fees arising out of, directly or indirectly, any claim of personal injury or death associated with such unintended or unauthorized use, even if such claim alleges that **onsemi** was negligent regarding the design or manufacture of the part. **onsemi** is an Equal Opportunity/Affirmative Action Employer. This literature is subject to all applicable copyright laws and is not for resale in any manner.

ADDITIONAL INFORMATION

TECHNICAL PUBLICATIONS:
Technical Library: www.onsemi.com/design/resources/technical−documentation
onsemi Website: www.onsemi.com

ONLINE SUPPORT: www.onsemi.com/support
For additional information, please contact your local Sales Representative at www.onsemi.com/support/sales

◊

Downloaded from Arrow.com.