DRW NO.	SH	REV
C-923-300E-500	1	H

ZONE	REV	ECN	DESCRIPTION	BY	DATE	APPROVED
SHT1. B8	F	DCOY-AB4NPZ.VER01	UPDATED PART MARKING REQUIREMENTS	HCL-DC	06/22/2016	D.COVEY
SHT6. SHT7. A5 SHT1. B8 SHT1. A8	G	BWAG-18022205	NOTCH DESIGN UPDATED FOR RIGHT WALL AND 2 WALL HOUSING. TB-2235 WAS TB-2308 IN NOTE 1. C-190-0009-000 ADDED IN NOTE 7.	HCL-UD	02/26/2018	B.WANG
	H	ADAI-18101001	ADDED NOTE 11.	HCL-PB	10/16/2018	A.DAI

NOTE: ONLY THREE MOST RECENT RELEASED REVISIONS DISPLAYED

923-3X0E-XXX

- 923 — XCede HD BACKPLANE MODULE MALE STANDARD LOAD
- 3 — 3 PAIR
- 0 — 8-POSITION

LETTER	PLATING
B	NI SULFAMATE, STANDARD GOLD, LEADED
C	NI SULFAMATE, HIGH GOLD, LEADED
D	NI SULFAMATE, STANDARD GOLD, LEADFREE
E	NI SULFAMATE, HIGH GOLD, LEADFREE
F	NANO NI, STANDARD GOLD, LEADED
G	NANO NI, HIGH GOLD, LEADED
H	NANO NI, STANDARD GOLD, LEADFREE
J	NANO NI. HIGH GOLD, LEADFREE

NUMBER	PIN STYLE, HEIGHT
0	GUIDE PIN MACHINED, 25.7mm / OPEN MODULE

NUMBER	SIGNAL & LG. GROUND WIPE LENGTH, COMPLIANT PIN SIZE
1	2 mm WIPE SIGNAL, 4 mm WIPE LG GND, Ø.0217" DRILL
2	3 mm WIPE SIGNAL, 4 mm WIPE LG GND, Ø.0217" DRILL
3	2 mm WIPE SIGNAL, 4 mm WIPE LG GND, Ø.0177" DRILL
4	3 mm WIPE SIGNAL, 4 mm WIPE LG GND, Ø.0177" DRILL
5	2 mm WIPE SIGNAL, 3 mm WIPE LG GND, Ø.0217" DRILL
6	3 mm WIPE SIGNAL, 3 mm WIPE LG GND, Ø.0217" DRILL
7	2 mm WIPE SIGNAL, 3 mm WIPE LG GND, Ø.0177" DRILL
8	3 mm WIPE SIGNAL, 3 mm WIPE LG GND, Ø.0177" DRILL
C	2 mm WIPE SIGNAL, 2 mm WIPE LG GND, Ø.0217" DRILL
D	2 mm WIPE SIGNAL, 2 mm WIPE LG GND, Ø.0177" DRILL

LETTER									
LEFT POLARIZING GUIDANCE (SEE SHEET 3)	J (NO KEY)	A	B	C	D	E	F	G	H
RIGHT POLARIZING GUIDANCE (SEE SHEET 4)	Y (NO KEY)	P	Q	R	S	T	U	V	W
OPEN (SEE SHEET 2)	O (ZERO)								
LEFT WALL (SEE SHEET 5)	L								
RIGHT WALL (SEE SHEET 6)	M								
TWO WALL (SEE SHEET 7)	1								

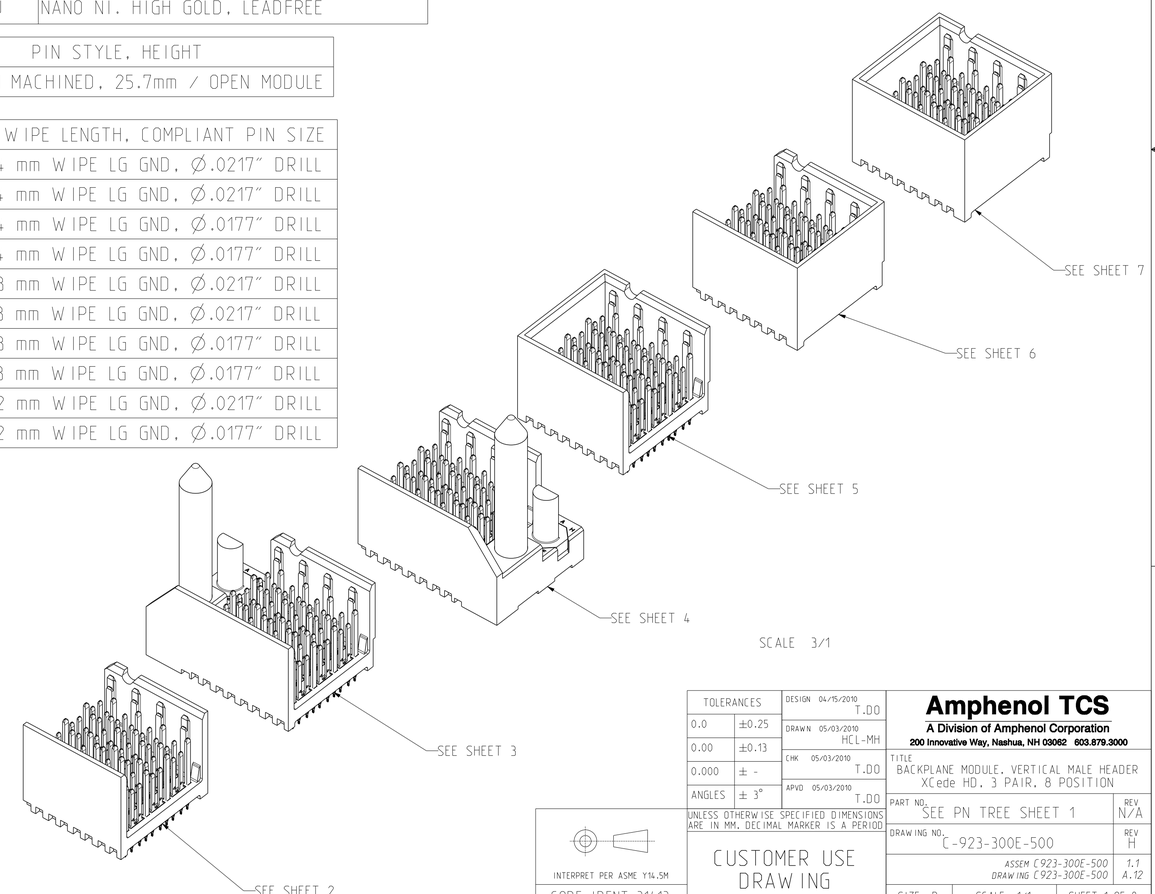

SCALE 3/1

NOTES:

1. REFER TO TB-2235 FOR XCede HD PRODUCT SPECIFICATIONS.
2. NOTCH DESIGNATES "ROW A" SIDE OF SHROUD. NOTCH FEATURE ON OPPOSITE SIDE FROM PART MARKING.
3. SEE TB-2325 FOR PART MARKING REQUIREMENTS.
4. PLATING THICKNESS OF SIGNAL CONTACT AND GROUND CONTACT IS DETERMINED BY PLATING CODE. SEE PART NUMBER TREE SHEET 1.
5. REPAIR PROCEDURE FOR MODULE. SEE TB-2245.
6. SEE TB-2237 FOR ROUTING GUIDELINES & PTH REQ'S.
7. SEE DOC C-190-0009-000 FOR TOOLING KEEPOUT ZONES.
8. BACKPLANE DATUM REFERENCE.
9. DIMENSIONS APPLY FOR BOTH COMPLIANT PIN SIZES.
10. OPTIONAL HOLE/MOUNTING SCREW LOCATION FOR GROUNDED PIN OR ADDITIONAL GUIDE PIN SUPPORT. SEE DRAWING C-914-3010-500 FOR OPTIONAL HOLE DETAILS. ONLY APPLIES FOR MACHINED GUIDE PIN APPLICATIONS.
11. ALL PLASTIC MATERIAL IS UL 94V-0 FLAMMABLE.

TOLERANCES	
0.0	±0.25
0.00	±0.13
0.000	± -
ANGLES	± 3°

UNLESS OTHERWISE SPECIFIED DIMENSIONS ARE IN MM. DECIMAL MARKER IS A PERIOD

INTERPRET PER ASME Y14.5M

CODE IDENT 31413

CUSTOMER USE DRAWING

DESIGN 04/15/2010	T.DO
DRAWN 05/03/2010	HCL-MH
CHK 05/03/2010	T.DO
APVD 05/03/2010	T.DO

Amphenol TCS
A Division of Amphenol Corporation
200 Innovative Way, Nashua, NH 03062 603.879.3000

TITLE: BACKPLANE MODULE. VERTICAL MALE HEADER XCede HD. 3 PAIR. 8 POSITION

PART NO.	REV
SEE PN TREE SHEET 1	N/A
DRAWING NO. C-923-300E-500	REV H

ASSEM C923-300E-500 1.1
DRAWING C923-300E-500 A.12

SIZE D | SCALE 1/1 | SHEET 1 OF 8

Downloaded from Arrow.com.

DRW NO.	SH	REV
C-923-300E-500	2	H

ZONE	REV	ECN	DESCRIPTION	BY	DATE	APPROVED
			SEE SHEET 1			

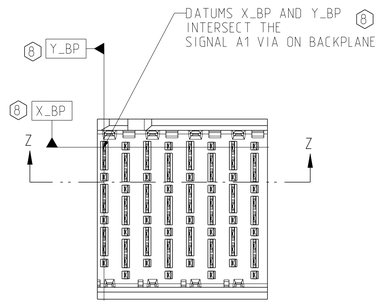

OPEN BACKPLANE MODULE DIMENSION

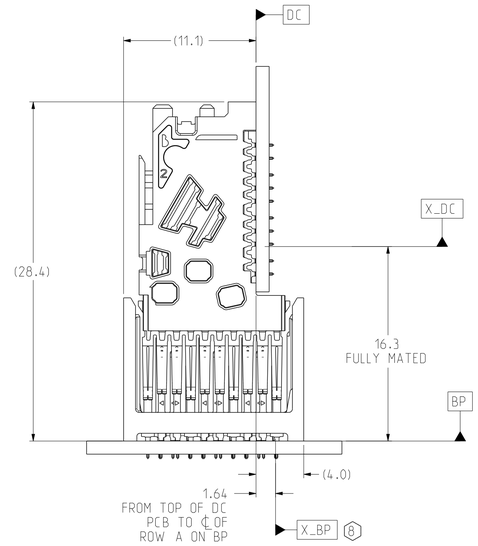

CONNECTOR REFERENCE
SCALE 4/1

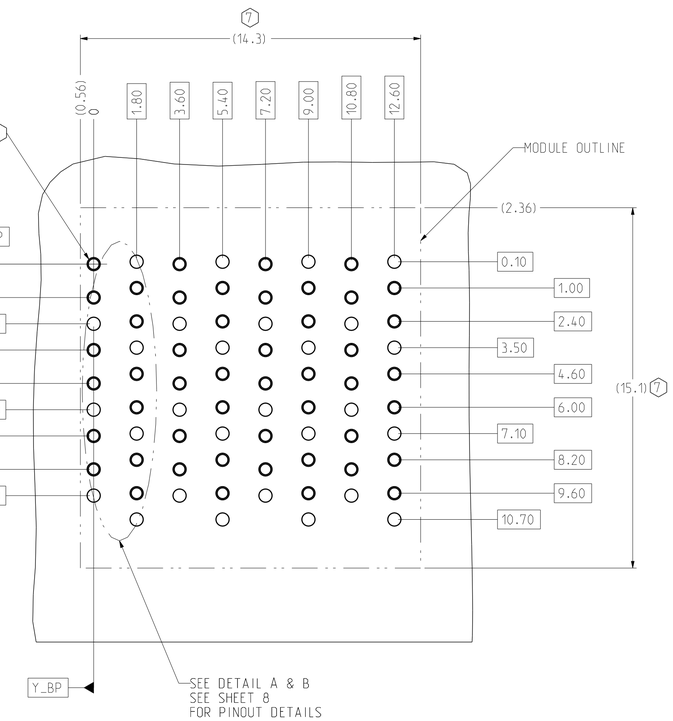

BP HOLE PATTERN
COMPONENT SIDE
SCALE 8/1

OPEN BACKPLANE FOOTPRINT

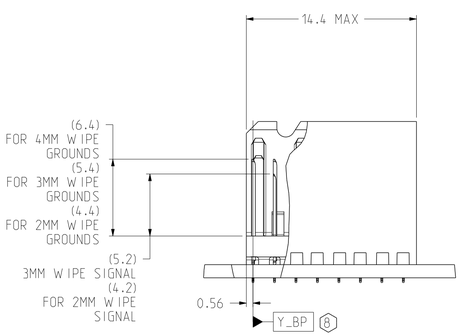

SECTION Z-Z

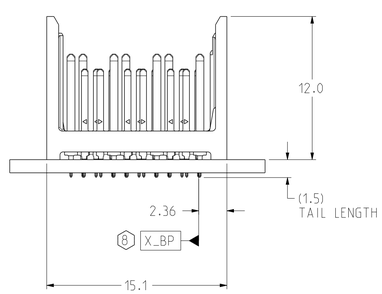

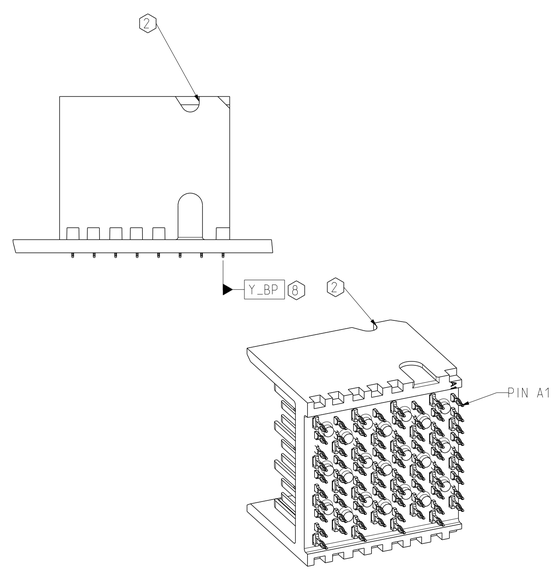

ISOMETRIC VIEW
SCALE 4/1

TOLERANCES	
0.0	±0.25
0.00	±0.13
0.000	± -
ANGLES	± 3°

UNLESS OTHERWISE SPECIFIED DIMENSIONS ARE IN MM. DECIMAL MARKER IS A PERIOD

INTERPRET PER ASME Y14.5M

CODE IDENT 31413

CUSTOMER USE DRAWING

DESIGN 04/15/2010 T.DO
DRAWN 05/03/2010 HCL-MH
CHK 05/03/2010 T.DO
APVD 05/03/2010 T.DO

Amphenol TCS
A Division of Amphenol Corporation
200 Innovative Way, Nashua, NH 03062 603.879.3000

TITLE
BACKPLANE MODULE, VERTICAL MALE HEADER
XCede HD, 3 PAIR, 8 POSITION

PART NO.	REV
SEE PN TREE SHEET 1	N/A
DRAWING NO. C-923-300E-500	REV H

ASSEM C923-300E-500 1.1
DRAWING C923-300E-500 A.12

SIZE D | SCALE 1/1 | SHEET 2 OF 8

Downloaded from Arrow.com.

DRW NO.	SH	REV
C-923-300E-500	3	H

ZONE	REV	ECN	DESCRIPTION	BY	DATE	APPROVED
			SEE SHEET 1			

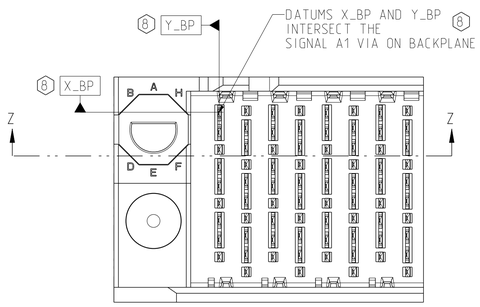

LEFT POLARIZING/GUIDE BACKPLANE MODULE DIMENSION

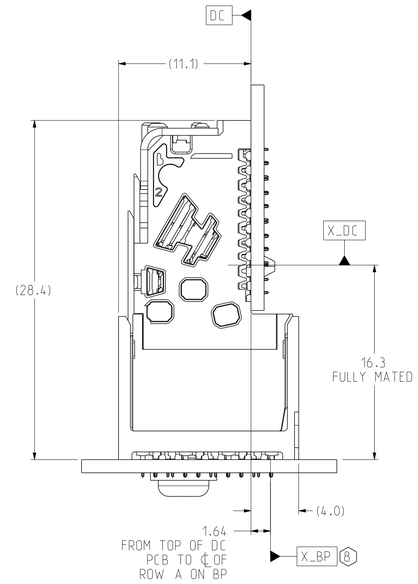

CONNECTOR REFERENCE
SCALE 4/1

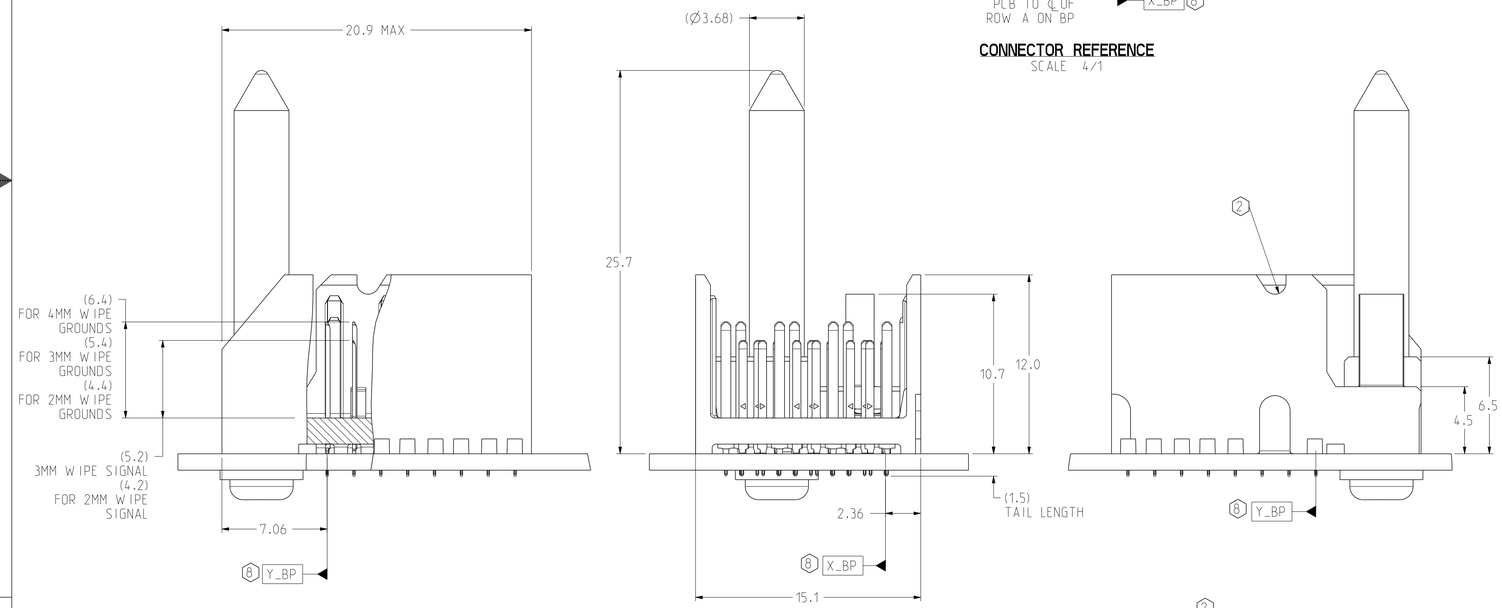

SECTION Z-Z

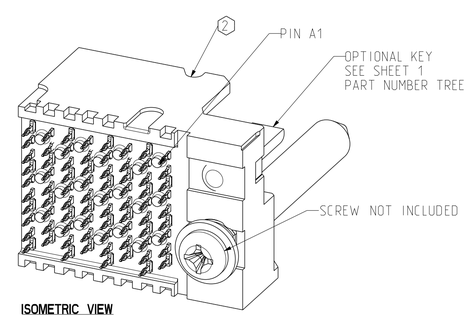

ISOMETRIC VIEW
SCALE 4/1

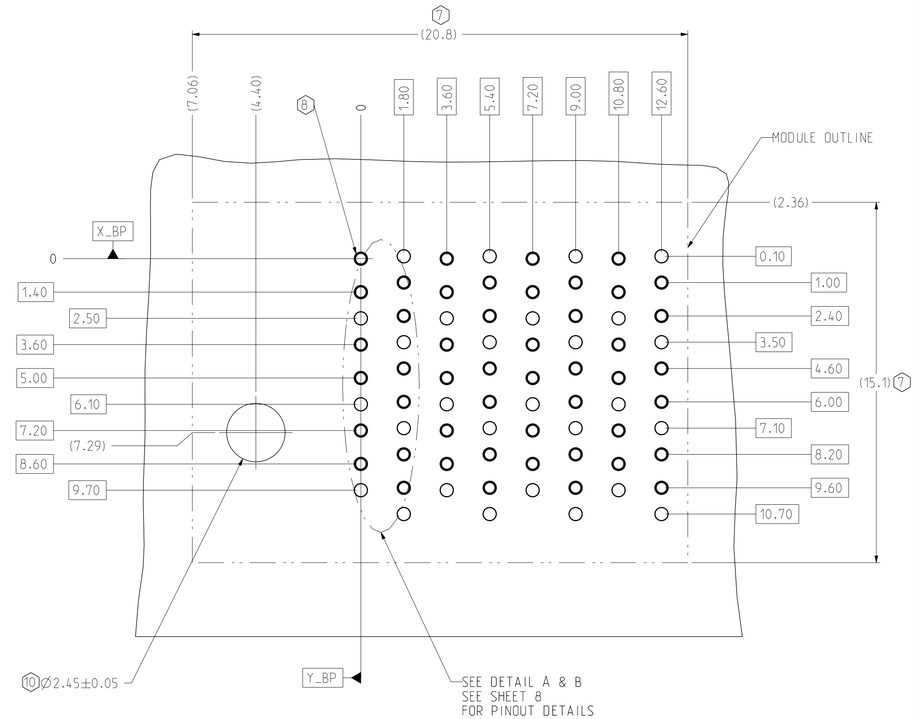

BP HOLE PATTERN COMPONENT SIDE
SCALE 8/1

LEFT POLARIZING/GUIDE BACKPLANE FOOTPRINT

TOLERANCES	
0.0	±0.25
0.00	±0.13
0.000	± -
ANGLES	± 3°

UNLESS OTHERWISE SPECIFIED DIMENSIONS ARE IN MM. DECIMAL MARKER IS A PERIOD

INTERPRET PER ASME Y14.5M

CODE IDENT 31413

CUSTOMER USE DRAWING

DESIGN 04/15/2010	T.DO	
DRAWN 05/03/2010	HCL-MH	
CHK 05/03/2010	T.DO	
APVD 05/03/2010	T.DO	

Amphenol TCS
A Division of Amphenol Corporation
200 Innovative Way, Nashua, NH 03062 603.879.3000

TITLE
BACKPLANE MODULE. VERTICAL MALE HEADER
XCede HD. 3 PAIR. 8 POSITION

PART NO.	REV
SEE PN TREE SHEET 1	N/A
DRAWING NO. C-923-300E-500	H
ASSEM C923-300E-500	1.1
DRAWING C923-300E-500	A.12

SIZE	SCALE	SHEET
D	1/1	3 OF 8

Downloaded from Arrow.com.

DRW NO.	SH	REV
C-923-300E-500	4	H

ZONE	REV	ECN	DESCRIPTION	BY	DATE	APPROVED
			SEE SHEET 1			

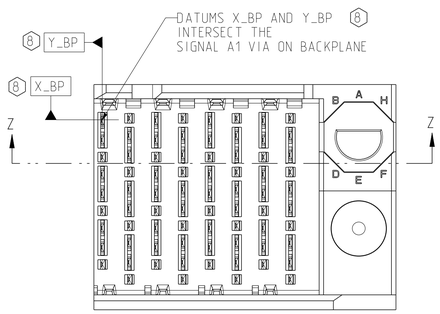

RIGHT POLARIZING/GUIDE
BACKPLANE MODULE DIMENSION

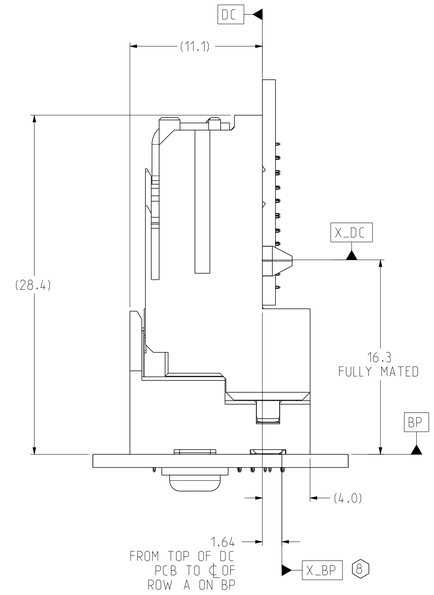

CONNECTOR REFERENCE
SCALE 4/1

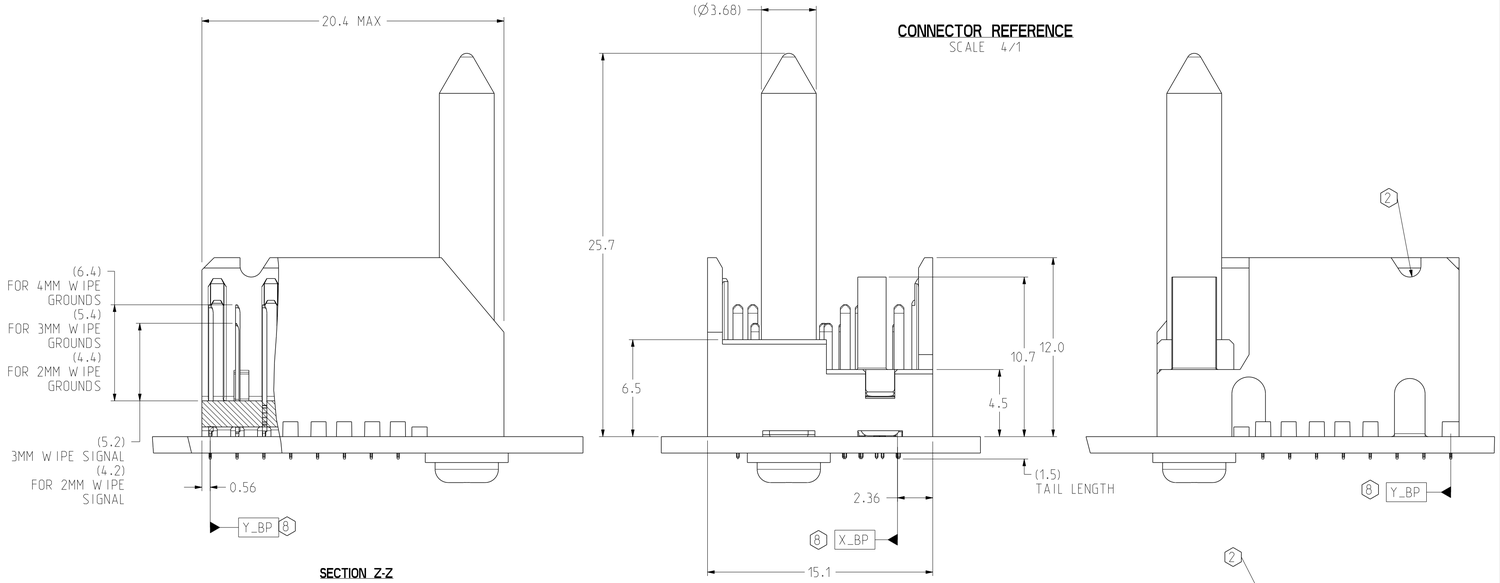

SECTION Z-Z

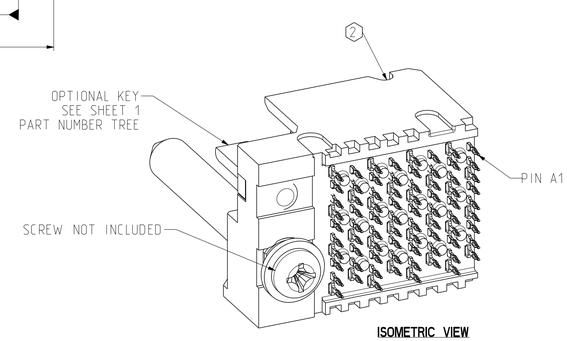

ISOMETRIC VIEW
SCALE 4/1

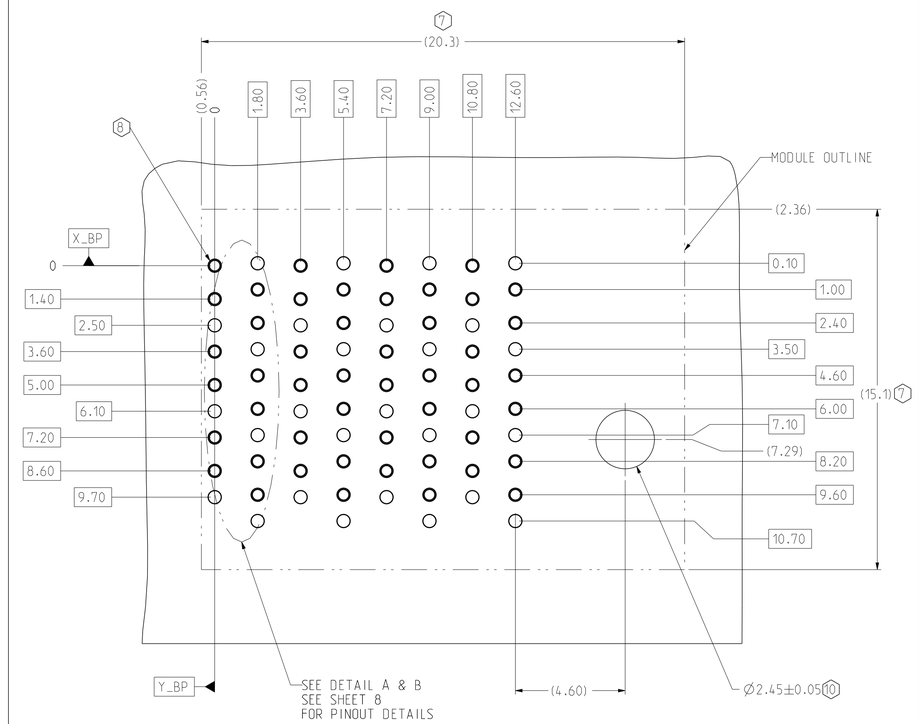

BP HOLE PATTERN
COMPONENT SIDE
SCALE 8/1

RIGHT POLARIZING/GUIDE
BACKPLANE FOOTPRINT

TOLERANCES	
0.0	±0.25
0.00	±0.13
0.000	± -
ANGLES	± 3°

UNLESS OTHERWISE SPECIFIED DIMENSIONS ARE IN MM. DECIMAL MARKER IS A PERIOD

DESIGN 04/15/2010 T.DO
DRAWN 05/03/2010 HCL-MH
CHK 05/03/2010 T.DO
APVD 05/03/2010 T.DO

Amphenol TCS
A Division of Amphenol Corporation
200 Innovative Way, Nashua, NH 03062 603.879.3000

TITLE
BACKPLANE MODULE. VERTICAL MALE HEADER
XCede HD. 3 PAIR. 8 POSITION

PART NO. SEE PN TREE SHEET 1 — REV N/A

DRAWING NO. C-923-300E-500 — REV H

ASSEM C923-300E-500 — 1.1
DRAWING C923-300E-500 — A.12

INTERPRET PER ASME Y14.5M

CUSTOMER USE
DRAWING

CODE IDENT 31413

SIZE D | SCALE 1/1 | SHEET 4 OF 8

Downloaded from Arrow.com.

DRW NO.	SH	REV
C-923-300E-500	5	H

ZONE	REV	ECN	DESCRIPTION	BY	DATE	APPROVED
			SEE SHEET 1			

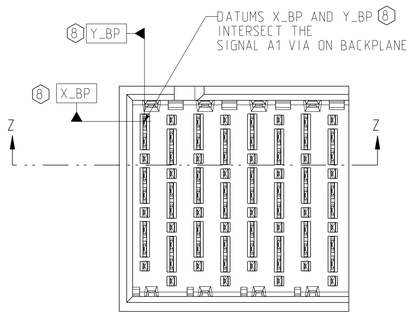

LEFT WALL BACKPLANE MODULE DIMENSION

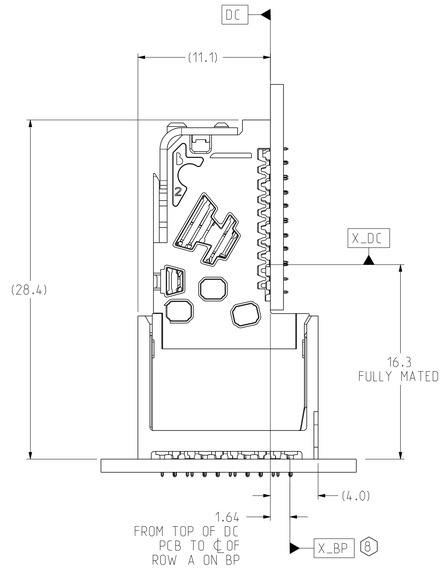

CONNECTOR REFERENCE
SCALE 4/1

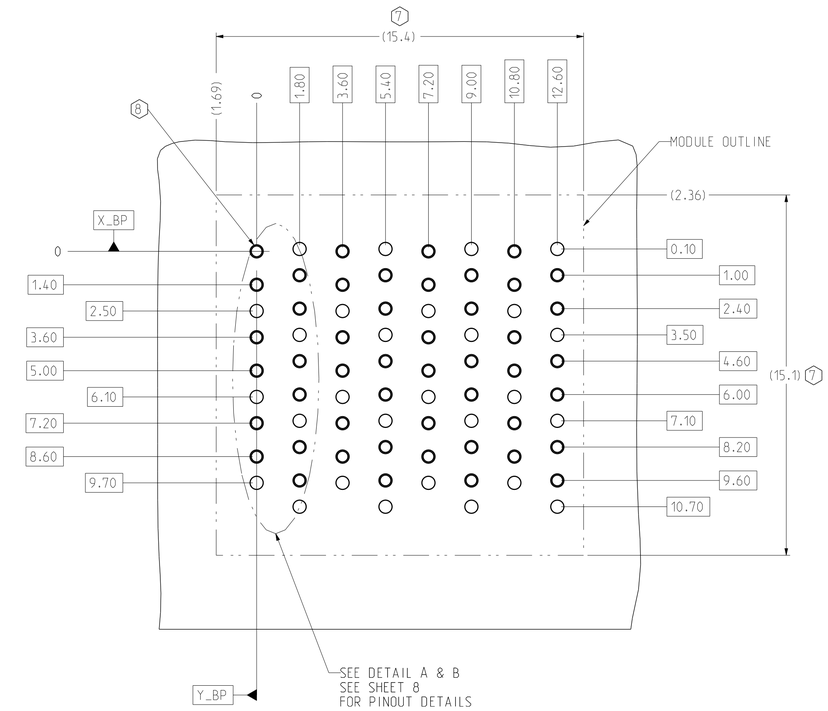

BP HOLE PATTERN
COMPONENT SIDE
SCALE 8/1

LEFT WALL BACKPLANE FOOTPRINT

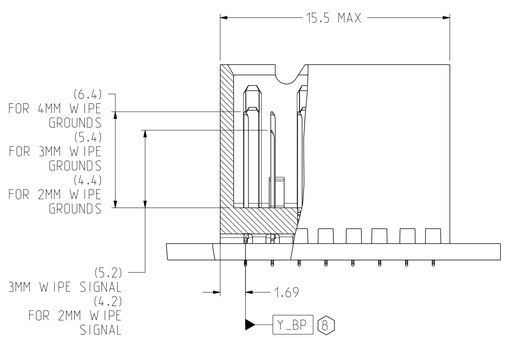

SECTION Z-Z

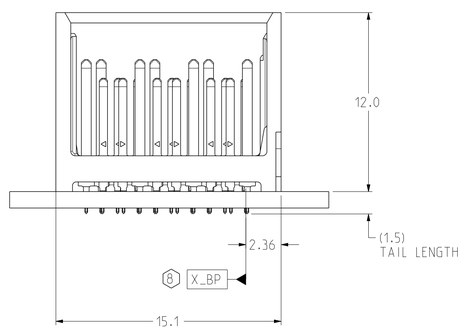

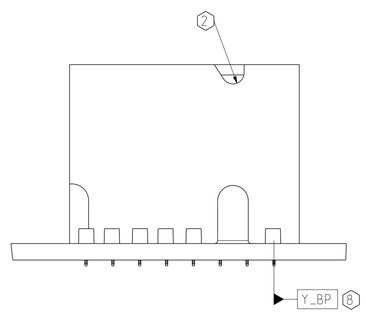

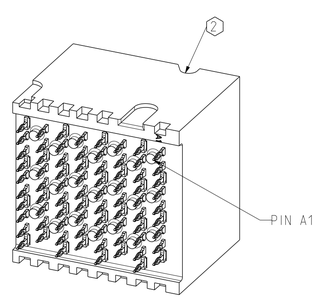

ISOMETRIC VIEW
SCALE 4/1

TOLERANCES	
0.0	±0.25
0.00	±0.13
0.000	± -
ANGLES	± 3°

UNLESS OTHERWISE SPECIFIED DIMENSIONS ARE IN MM. DECIMAL MARKER IS A PERIOD

INTERPRET PER ASME Y14.5M

CODE IDENT 31413

CUSTOMER USE DRAWING

DESIGN 04/15/2010	T.DO
DRAWN 05/03/2010	HCL-MH
CHK 05/03/2010	T.DO
APVD 05/03/2010	T.DO

Amphenol TCS
A Division of Amphenol Corporation
200 Innovative Way, Nashua, NH 03062 603.879.3000

TITLE BACKPLANE MODULE, VERTICAL MALE HEADER XCede HD, 3 PAIR, 8 POSITION

PART NO.	REV
SEE PN TREE SHEET 1	N/A
DRAWING NO. C-923-300E-500	REV H
ASSEM C923-300E-500 / DRAWING C923-300E-500	1.1 / A.12

SIZE D | SCALE 1/1 | SHEET 5 OF 8

Downloaded from Arrow.com.

DRW NO.	SH	REV
C-923-300E-500	6	H

ZONE	REV	ECN	DESCRIPTION	BY	DATE	APPROVED
			SEE SHEET 1			

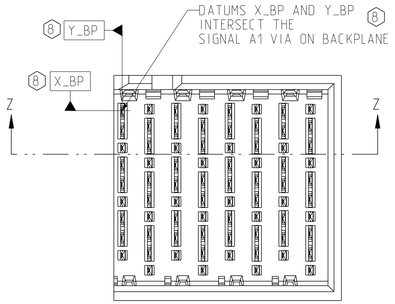

RIGHT WALL BACKPLANE MODULE DIMENSION

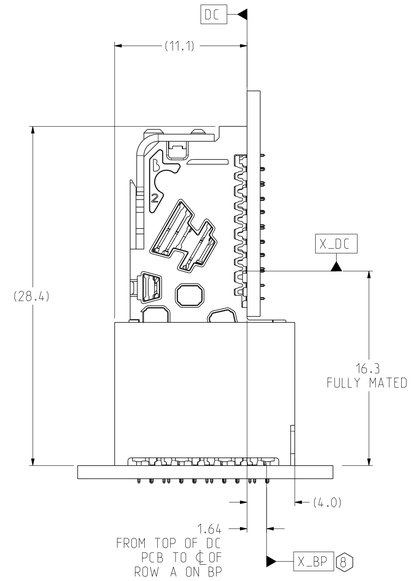

CONNECTOR REFERENCE
SCALE 4/1

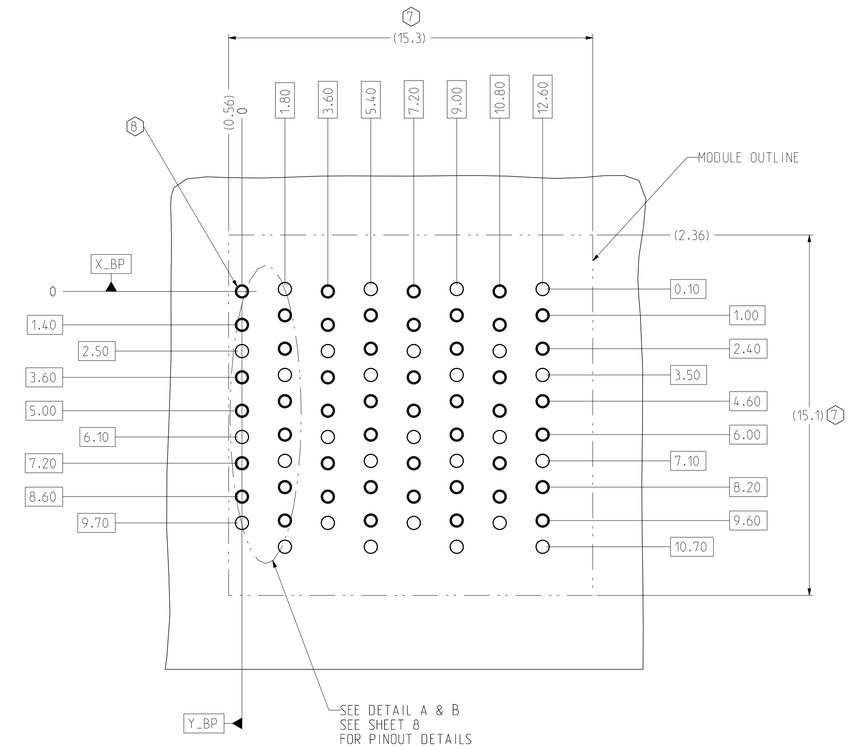

BP HOLE PATTERN
COMPONENT SIDE
SCALE 8/1

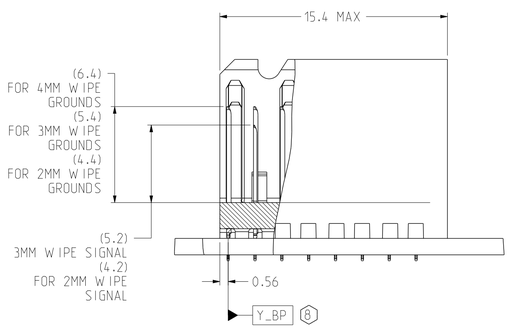

SECTION Z-Z

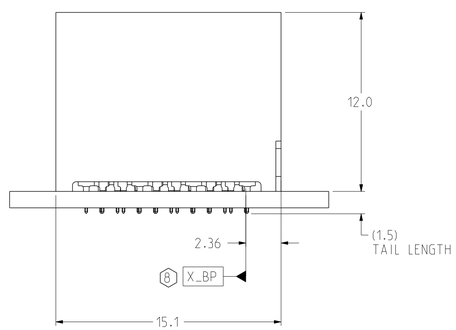

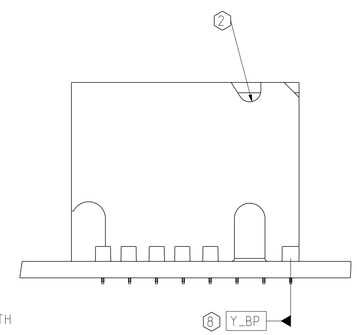

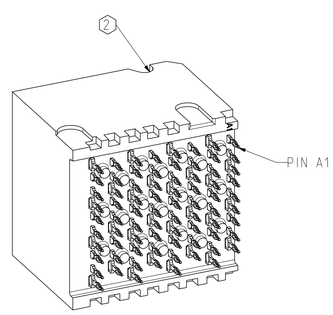

ISOMETRIC VIEW
SCALE 4/1

RIGHT WALL BACKPLANE FOOTPRINT

TOLERANCES	
0.0	±0.25
0.00	±0.13
0.000	± -
ANGLES	± 3°

UNLESS OTHERWISE SPECIFIED DIMENSIONS ARE IN MM. DECIMAL MARKER IS A PERIOD

INTERPRET PER ASME Y14.5M

CODE IDENT 31413

CUSTOMER USE DRAWING

DESIGN 04/15/2010 T.DO
DRAWN 05/03/2010 HCL-MH
CHK 05/03/2010 T.DO
APVD 05/03/2010 T.DO

Amphenol TCS
A Division of Amphenol Corporation
200 Innovative Way, Nashua, NH 03062 603.879.3000

TITLE BACKPLANE MODULE. VERTICAL MALE HEADER XCede HD. 3 PAIR. 8 POSITION

PART NO. SEE PN TREE SHEET 1 — REV N/A

DRAWING NO. C-923-300E-500 — REV H

ASSEM C923-300E-500 1.1
DRAWING C923-300E-500 A.12

SIZE D | SCALE 1/1 | SHEET 6 OF 8

Downloaded from Arrow.com.

DRW NO.	SH	REV
C-923-300E-500	7	H

ZONE	REV	ECN	DESCRIPTION	BY	DATE	APPROVED
			SEE SHEET 1			

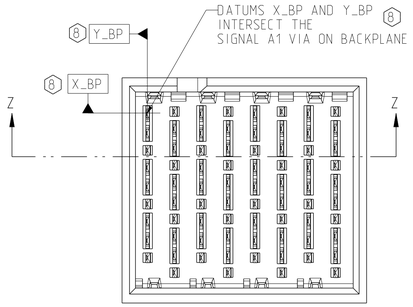

TWO WALL BACKPLANE MODULE DIMENSION

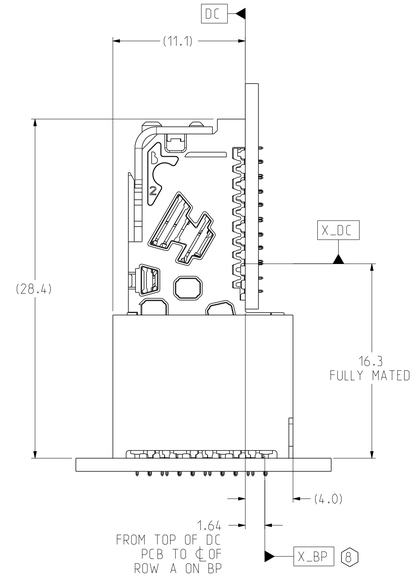

CONNECTOR REFERENCE
SCALE 4/1

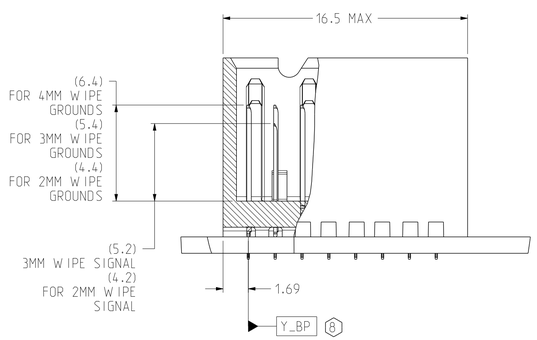

SECTION Z-Z

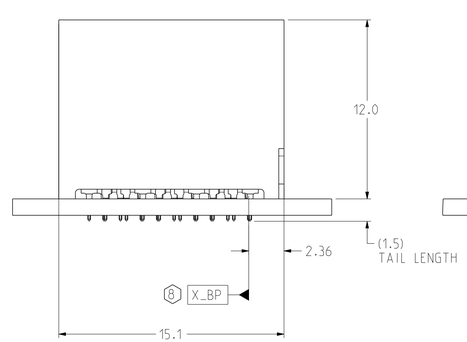

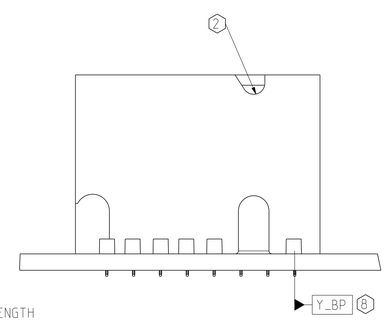

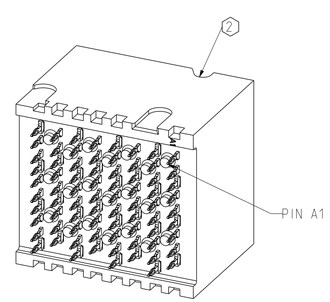

ISOMETRIC VIEW
SCALE 4/1

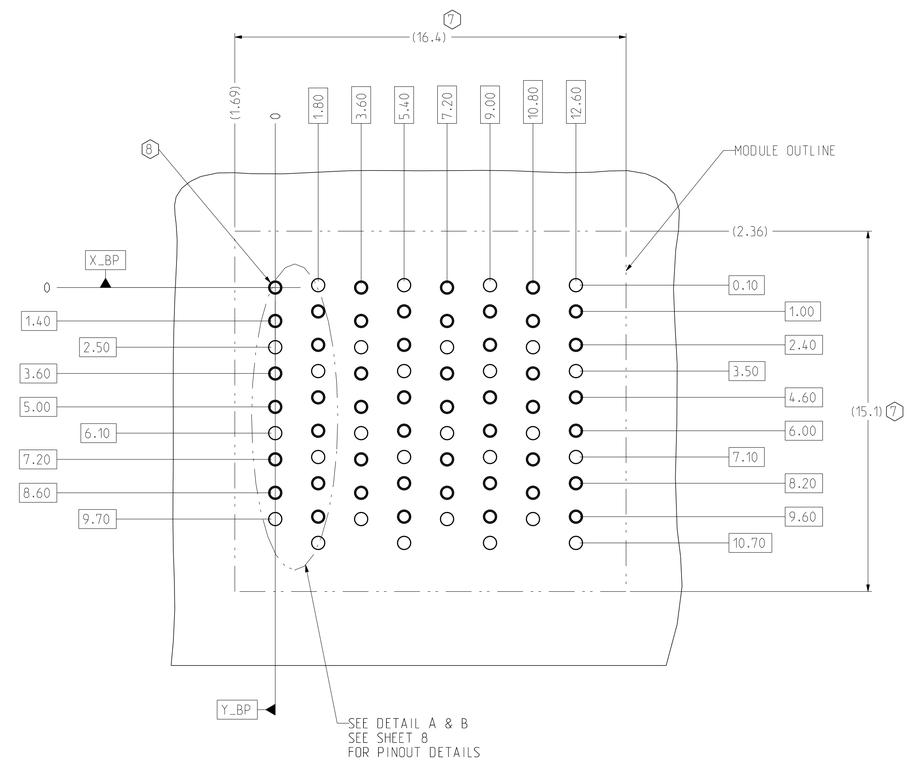

BP HOLE PATTERN
COMPONENT SIDE
SCALE 8/1

TWO WALL BACKPLANE FOOTPRINT

TOLERANCES	
0.0	±0.25
0.00	±0.13
0.000	± -
ANGLES	± 3°

UNLESS OTHERWISE SPECIFIED DIMENSIONS ARE IN MM. DECIMAL MARKER IS A PERIOD

INTERPRET PER ASME Y14.5M

CODE IDENT 31413

CUSTOMER USE DRAWING

DESIGN 04/15/2010	T.DO
DRAWN 05/03/2010	HCL-MH
CHK 05/03/2010	T.DO
APVD 05/03/2010	T.DO

Amphenol TCS
A Division of Amphenol Corporation
200 Innovative Way, Nashua, NH 03062 603.879.3000

TITLE
BACKPLANE MODULE, VERTICAL MALE HEADER
XCede HD, 3 PAIR, 8 POSITION

PART NO.	REV
SEE PN TREE SHEET 1	N/A
DRAWING NO. C-923-300E-500	REV H
ASSEM C923-300E-500 / DRAWING C923-300E-500	1.1 / A.12

SIZE D | SCALE 1/1 | SHEET 7 OF 8

Downloaded from Arrow.com.

DRW NO.	SH	REV
C-923-300E-500	8	H

ZONE	REV	ECN	DESCRIPTION	BY	DATE	APPROVED
			SEE SHEET 1			

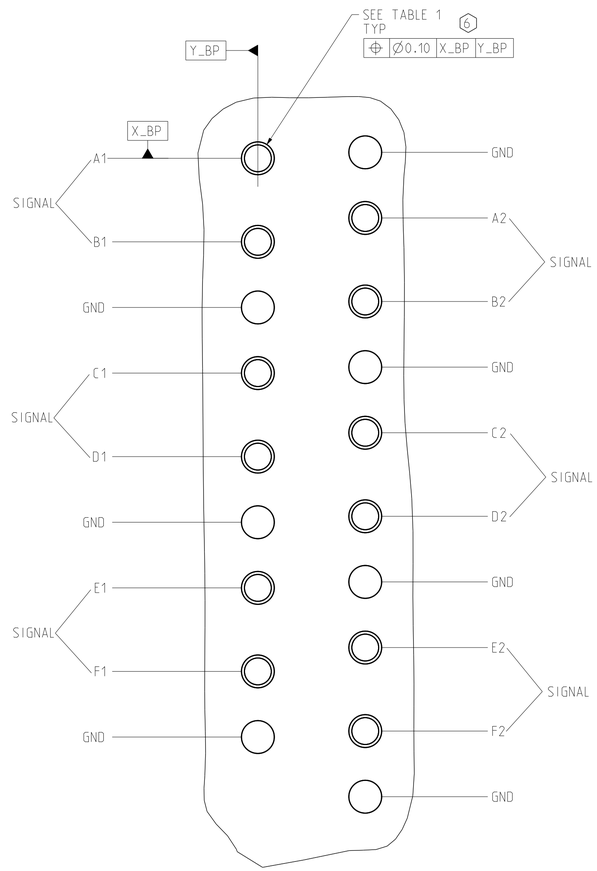

DETAIL A
HSD PINOUTS
SCALE 20/1

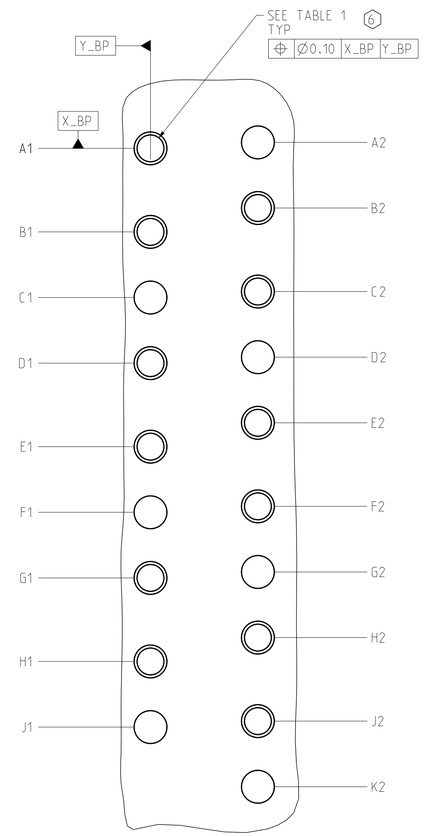

DETAIL B
LC PINOUTS
SCALE 20/1

TABLE 1 6

	COMPLIANT PIN DRILL Ø.0217"	COMPLIANT PIN DRILL Ø.0177"
PTH	Ø0.45±0.05	Ø0.36±0.05
DRILL	Ø0.55 [.0217"]	Ø0.45 [.0177"]
PAD	Ø0.85	Ø0.75

TOLERANCES	
0.0	±0.25
0.00	±0.13
0.000	± -
ANGLES	± 3°

UNLESS OTHERWISE SPECIFIED DIMENSIONS ARE IN MM. DECIMAL MARKER IS A PERIOD

INTERPRET PER ASME Y14.5M

CODE IDENT 31413

CUSTOMER USE DRAWING

DESIGN 04/15/2010 T.DO
DRAWN 05/03/2010 HCL-MH
CHK 05/03/2010 T.DO
APVD 05/03/2010 T.DO

Amphenol TCS
A Division of Amphenol Corporation
200 Innovative Way, Nashua, NH 03062 603.879.3000

TITLE BACKPLANE MODULE. VERTICAL MALE HEADER XCede HD. 3 PAIR. 8 POSITION

PART NO. SEE PN TREE SHEET 1 REV N/A

DRAWING NO. C-923-300E-500 REV H

ASSEM C923-300E-500 1.1
DRAWING C923-300E-500 A.12

SIZE D SCALE 1/1 SHEET 8 OF 8

Downloaded from Arrow.com.