# 1.27mm Pitch Multi-function Two Piece Connector

FX2 Series

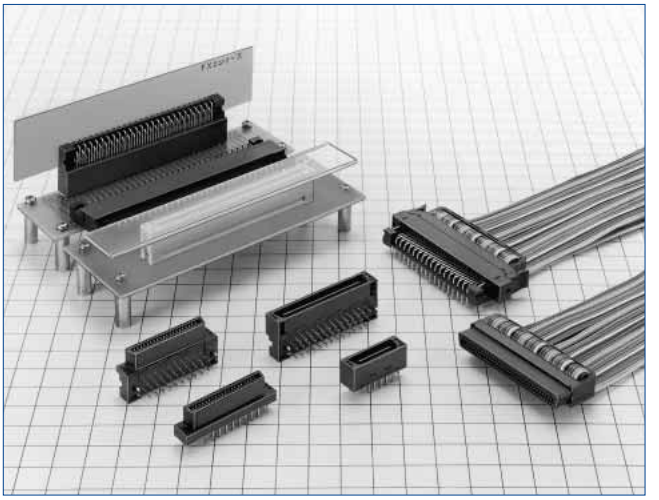

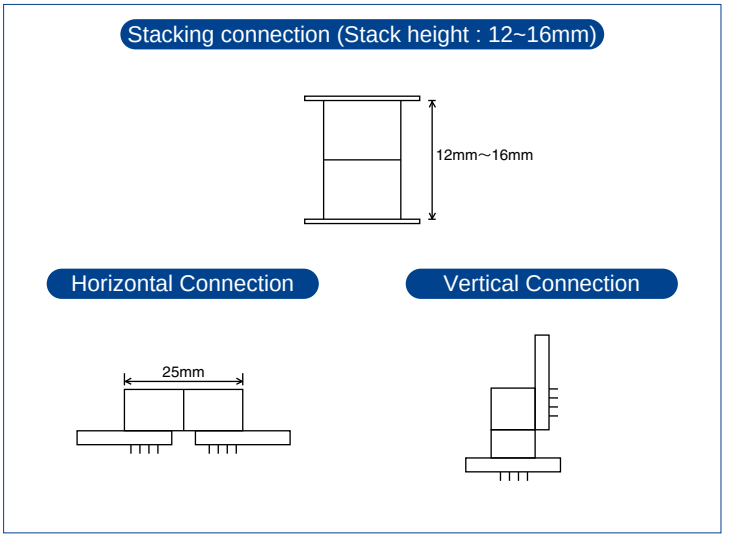


## ■Features

### 1. Various connection with various product line

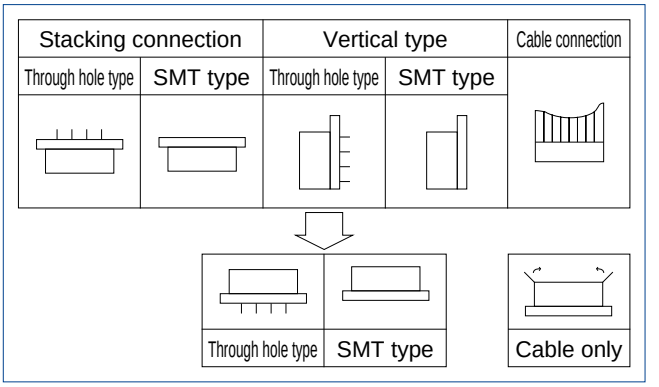


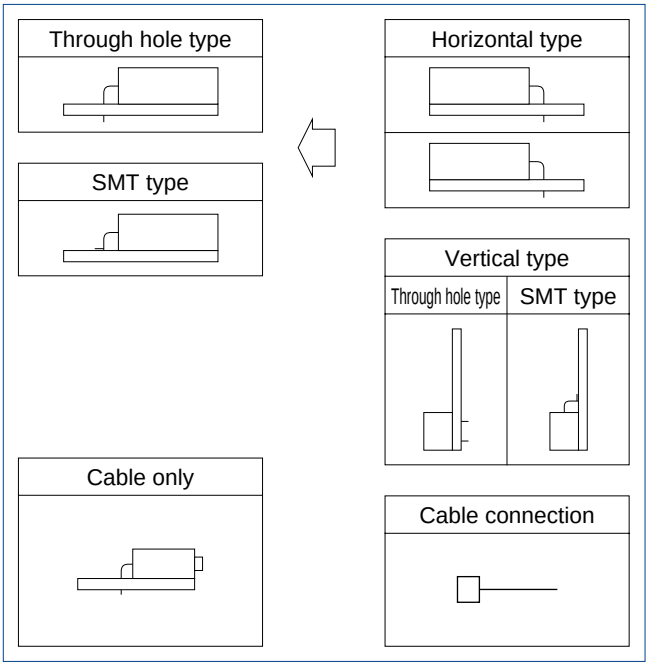


### 2. Easy One-Touch Operation

The ribbon cable connection type allows easy one-touch operation with either single hand.

Insertion and Extraction

(1) Pick internal locks with thumb and the index finger.

(2) With unique and preferable click feeling, the cable and connector can be inserted or withdrawed.

(For insertion, the operation proceeds from procedure (2) to (1).)

Dec.1.2025 Copyright 2025 HIROSE ELECTRIC CO., LTD. All Rights Reserved.



Downloaded from Arrow.com.

### 3. Board to board type

#### ① Flux swell prevention

The straight through hole type takes the complete flux tight action from the board back side at solder dipping. The type is prepared, corresponding to whether or not cleaning is required.

#### ② Stack height 12mm to 16mm

The board stack height can be set to every 1mm unit up to 12 to 16mm.

#### ③ Mis-insertion preventive mechanism

The mating area is designed in a mechanism so as to prevent mis-insertion, and complete countermeasures have been taken against wrenching.

### 4. Board to cable type

#### ① Complete lock with easy operation

Employing the inner lock system, complete lock and eject actions can be performed with easy operation.

#### ② Applicable cable

The applicable cable is the <UL2651>AWG#28 flat cable (7/0.127mm), and the jacket size is 0.9±0.1mm.

### 5. SMT type

#### Strength security with metaltab

The right angle type is equipped with metaltab to secure soldering strength, and constructed so as to fix by screws. The straight type can choose whether or not metaltab are required.

## ■Applications

Computers, peripheral equipments, various machines etc.

## ■Product Specifications

| | | | |
|---|---|---|---|
| Rating | Current rating 0.5A | Operating Temperature Range -55℃ to +85℃ (Note 1) | Storage Temperature Range -10℃ to +60℃ (Note 2) |
| | Voltage rating 125V AC | Operating Humidity Range 40 to 80% | Storage Humidity Range 40 to 70% (Note 2) |

| Item | Specification | Condition | |
|---|---|---|---|
| 1. Insulation Resistance | 1000MΩ min | 250V DC | |
| 2. Withstanding Voltage | No flashover or insulation breakdown. | 300V AC/1 minute | |
| 3. Contact Resistance | 45mΩ max. | 100mA | |
| 4. Vibration | No electrical discontinuity of 1μs or more | Frequency : 10 to 55Hz, single amplitude of 0.75mm, 2 hours in each of the 3 directions. | |
| 5. Humidity (Steady state) | Contact resistance : 55mΩ max. Insulation resistance : 100MΩ min. | 96 hours at temperature of 40℃ and humidity of 90% to 95% | |
| 6. Temperature Cycle | Contact resistance : 55mΩ max.<br>Insulation resistance : 100MΩ min.<br>No damage, cracks, or parts looseness. | (-55℃ : 30 minutes→15 to 35℃ : 2 to 3 minutes →<br>85℃ : 30 minutes→15 to 35℃ : 2 to 3 minutes) 5 cycles | |
| 7. Durability (Mating/un-mating) | Contact resistance : 55mΩ max. | 500 cycles | |
| 8. Resistance to soldering heat | No deformation of components affecting performance. | SMT Type | Reflow : At the recommended temperature profile<br>Manual soldering : 360℃ for 5 seconds |
| | | DIP Type | Solder bath : 260℃ for 10 seconds<br>Manual soldering : 360℃ for 5 seconds |

Note 1 : Includes temperature rise caused by current flow.
Note 2 : The term "storage" refers to products stored for long period of time prior to mounting and use. Operating Temperature Range and Humidity range covers non conducting condition of installed connectors in storage, shipment or during transportation.
Note 3 : Information contained in this catalog represents general requirements for this Series.Contact us for the drawings and specifications for a specific part number shown.

## ■Material

| Parts | | Material | Finish | Remark |
|---|---|---|---|---|
| Insulator | Dip type | Polyamid | Black | UL94V-0 |
| | Socket | PBT/Polyamid | | |
| | SMT type | PPS | Light brown | |
| Contact | Receptacle | Phosphor bronze | Selective gold plated | ———— |
| | Socket | | | |
| | Header | Phosphor bronze or brass | | |

## ■Stacking Variation

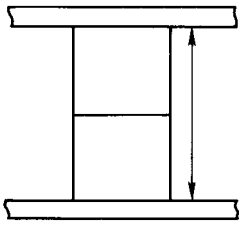

Unit:mm

| Header \ Receptacle | | Dip type | | SMT type |
|---|---|---|---|---|
| | | FX2C-∗S-1.27DSA(L)<br>FX2CA-∗S-1.27DSA(L) | FX2C2-∗S-1.27DSA(L)<br>FX2CA2-∗S-1.27DSA(L) | FX2-∗S-1.27SV(L) |
| Dip type | FX2C-∗P-1.27DSA(L) | 12 | 14.0 | 12.2 |
| | FX2CA-∗P-1.27DSA(L) | | | |
| | FX2CA1-∗P-1.27DSA(L) | 13 | 15.0 | 13.2 |
| | FX2CA2-∗P-1.27DSA(L) | 14 | 16.0 | 14.2 |
| SMT type | FX2-∗P-1.27SV(L) | 12.1 | 14.1 | 12.3 |

Dec.1.2025 Copyright 2025 HIROSE ELECTRIC CO., LTD. All Rights Reserved.



Downloaded from Arrow.com.

# ■Ordering Information

## ●Board to Board Receptacle

**FX2 CA 2 - ＊ S - 1.27 DSA L**
❶ ❷ ❸ ❹ ❺ ❻ ❼ ❽

| | |
|---|---|
| ❶ Series Name : FX2 | ❹ Number of contacts : 20, 32, 40, 52, 60, 68, 80, 100, 120 |
| ❷ Blank : Right angle type<br>C : Straight non-cleaning type<br>CA : Straight cleaning type | ❺ Connector type : S : Receptacle<br>❻ Contact pitch : 1.27mm<br>❼ Contact type<br>DS : Right angle type<br>DSA : Straight type |
| ❸ Product height variation (DSA only)<br>Blank : Standard product<br>2 : +2mm | ❽ L : Board prefixed pin |

## ●Board to Board Header

**FX2 CA 1 - ＊ P - 1.27 DSA L**
❶ ❷ ❸ ❹ ❺ ❻ ❼ ❽

| | |
|---|---|
| ❶ Series Name : FX2 | ❹ Number of contacts : 20, 32, 40, 52, 60, 68, 80, 100, 120 |
| ❷ None : Right angle type<br>C : Straight non-cleaning type<br>CA : Straight cleaning type | ❺ Connector type : P : header<br>❻ Contact pitch : 1.27mm<br>❼ Contact type :<br>DS : Right angle type<br>DSA : Straight type |
| ❸ Product height variation (DSA only)<br>Blank : Standard product<br>1 : +1mm<br>2 : +2mm | ❽ L : Board prefixed pin |

Note 1. C and CA take complete countermeasures against flux.
Note 2. Cleaning type : the liquid escape hole is added at dip cleaning.
Note 3. No-cleaning type : no liquid escape hole is added at dip cleaning.

## ●Board to Cable Socket

**FX2 BA - ＊ S A - 1.27 R**
❶ ❷ ❸ ❹ ❺ ❻ ❼

| | |
|---|---|
| ❶ Series Name : FX2 | ❹ S : Socket |
| ❷ B : Lock cable type<br>BA : No lock cable type | ❺ A : Contact material: phosphor bronze<br>❻ Contact pitch : 1.27mm |
| ❸ Number of contacts : 20, 32, 40, 52, 60, 68, 80, 100 | ❼ R : Insulation displacement |

Dec.1.2025 Copyright 2025 HIROSE ELECTRIC CO., LTD. All Rights Reserved.



Downloaded from Arrow.com.

## ●Board to Cable Header

**FX2 BA - ✻ P A - 1.27 DSA L**
❶ ❷ ❸ ❹ ❺ ❻ ❼ ❽

| | |
|---|---|
| ❶ Series Name : FX2 | ❺ None : Contact material: phosphor bronze<br>A : Contact material: brass |
| ❷ B : Lock straight no cleaning type<br>: Lock right angle type<br>BA : Lock straight cleaning type | ❻ Contact pitch : 1.27mm |
| ❸ Number of contacts : 20, 32, 40, 52, 60, 68, 80, 100 | ❼ Contact type :<br>DS : Right angle type<br>DSA : Straight type |
| ❹ Connector type : P : header | ❽ L : Board prefixed pin |

Note 1. Cleaning type : The liquid escape hole is added at dip cleaning.
Note 2. No cleaning type : No liquid escape hole is added at dip cleaning.
Note 3. Straight 20 and 32 contact types use phosphor bronze for contact material.

## ●Straight SMT Type

**FX2 - ✻ P - 1.27 SV L**
❶ ❷ ❸ ❹ ❺ ❻

| | |
|---|---|
| ❶ Series Name : FX2 | ❹ Contact pitch : 1.27mm |
| ❷ Number of contacts : 20, 32, 40, 52, 60, 68, 80, 100, 120 | ❺ Contact type :<br>SV : Straight SMT type |
| ❸ Connector type : P : Header<br>S : Receptacle | ❻ L : Board prefixed pin |

## ●Header Right Angle SMT Type

**FX2 A - ✻ P - 0.635 SH**
❶ ❷ ❸ ❹ ❺ ❻

| | |
|---|---|
| ❶ Series Name : FX2 | ❹ Connector type : P : Header |
| ❷ Blank : With boss<br>A : Without boss | ❺ Mounting area pitch : 0.635mm |
| ❸ Number of contacts : 20, 40, 52, 60, 80 | ❻ Contact type<br>SH : Right angle SMT type |

Dec.1.2025 Copyright 2025 HIROSE ELECTRIC CO., LTD. All Rights Reserved.


Downloaded from Arrow.com.

## ◆FX2 Functional Flow Chart

Board to Board Cable Type

| Header Side | Receptacle and Socket Side |
|---|---|
| **FX2-＊P-1.27DS (L)**<br>**Right angle type**<br> 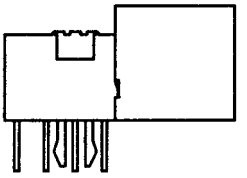 | **FX2-＊S-1.27DS (L)**<br>**Right angle type**<br> 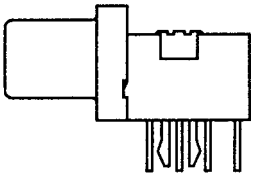 |
| **FX2(A)-＊P-0.635SH**<br>**Right angle type**<br>**SMT type**<br> 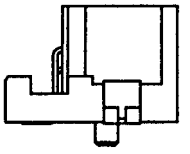 | **FX2C-＊S-1.27DS (L)**<br>**Straight type**<br>**No cleaning type, flux tight**<br> 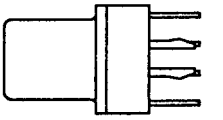 |
| **FX2C-＊P-1.27DSA (L)**<br>**Straight type**<br>**No cleaning type, flux tight**<br> 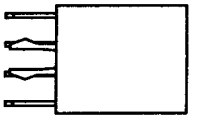 | **FX2C-＊S-1.27DS (L)**<br>**Straight type**<br>**Cleaning type, flux tight**<br> 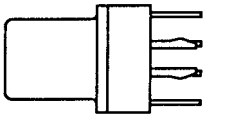 |
| **FX2CA-＊P-1.27DSA (L)**<br>**Straight type**<br>**Cleaning type, flux tight**<br> 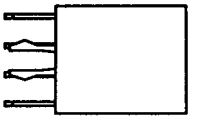 | **FX2CA-＊S-1.27DSV (L)**<br>**Straight type**<br>**SMT type**<br> 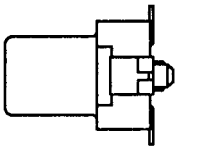 |
| **FX2-＊P-1.27DSA (L)**<br>**Straight type**<br>**SMT type**<br> 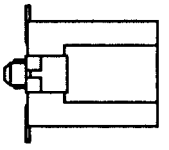 | **FX2BA-＊SA-1.27R**<br>**No lock cable type**<br> 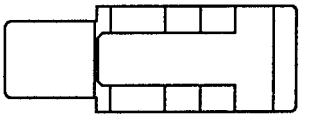 |

Dec.1.2025 Copyright 2025 HIROSE ELECTRIC CO., LTD. All Rights Reserved.



Downloaded from Arrow.com.

## ◆FX2 Functional Flow Chart

Board to Board Cable Type

| Header Side | Receptacle and Socket Side |
|---|---|
| **FX2B-✻PA-1.27DS (L)**<br>**Lock right angle type**<br> 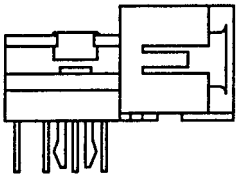 | |
| **FX2B-✻PA-1.27DSA(L)**<br>**Lock straight type**<br>**No cleaning type, flux tight**<br> 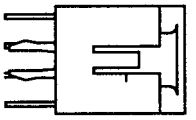 | **FX2BA-✻SA-1.27R**<br>**Lock cable type**<br> 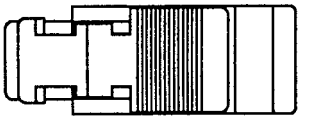 |
| **FX2BA-✻PA-1.27DSA(L)**<br>**Lock straight type**<br>**Cleaning type, flux tight**<br> 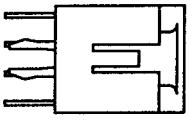 | |

Dec.1.2025 Copyright 2025 HIROSE ELECTRIC CO., LTD. All Rights Reserved.



Downloaded from Arrow.com.

## ◆Through hole Type Application Pattern

Header

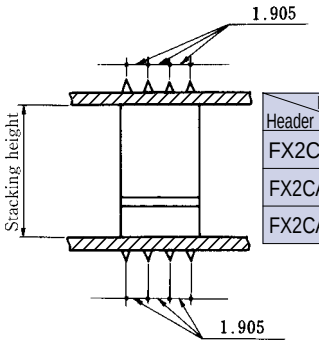


Stacking height

| Header \ Receptacle | FX2CA-∗S | FX2CA2-∗S |
|---|---|---|
| FX2CA-∗P | 12 | 14 |
| FX2CA1-∗P | 13 | 15 |
| FX2CA2-∗P | 14 | 16 |

Receptacle

FX2-∗P-1.27DS(L)

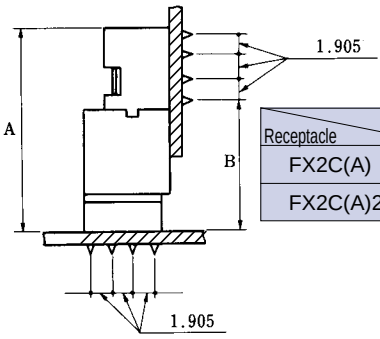


| Receptacle | A | B |
|---|---|---|
| FX2C(A) -∗S | 18.5 | 12 |
| FX2C(A)2-∗S | 20.5 | 14 |

Receptacle

FX2-∗P-1.27DS(L)

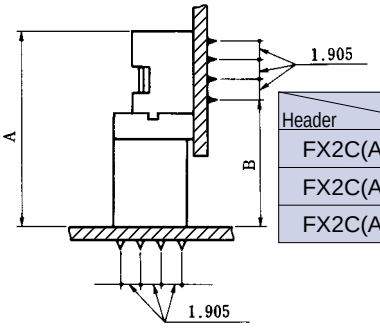


| Header | A | B |
|---|---|---|
| FX2C(A) -∗P | 18.5 | 12 |
| FX2C(A)1-∗P | 19.5 | 13 |
| FX2C(A)2-∗P | 20.5 | 14 |

Header

FX2-∗S-1.27DS(L)

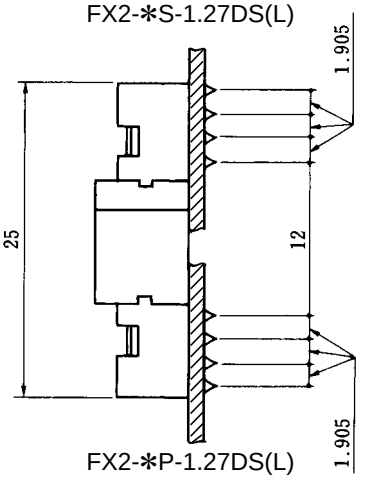


FX2-∗P-1.27DS(L)

FX2B(A)-∗SA-1.27R

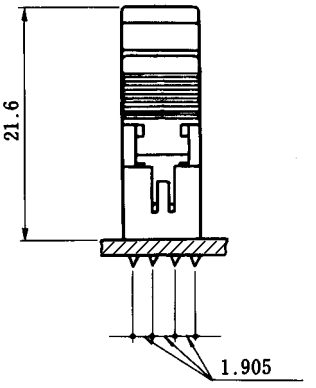


FX2B(A)-∗P(A)-1.27DSA(L)

FX2B(A)-∗SA-1.27R

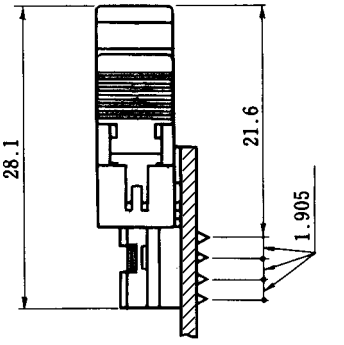


FX2B-∗PA-1.27DS(L)

Dec.1.2025 Copyright 2025 HIROSE ELECTRIC CO., LTD. All Rights Reserved.



Downloaded from Arrow.com.

## ◆SMT Type Application Pattern

FX2-∗P-1.27SV(L)

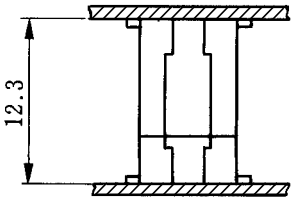


FX2-∗S-1.27SV(L)

FX2-∗S-1.27SV(L)

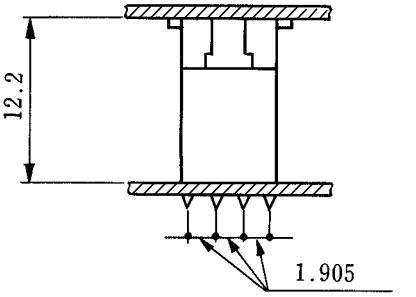


FX2C(A)-∗P-1.27DSA(L)

FX2-∗P-1.27SV(L)

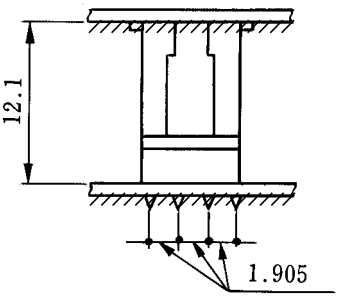


FX2C(A)-∗S-1.27-DSA(L)

FX2-∗S-1.27SV(L)

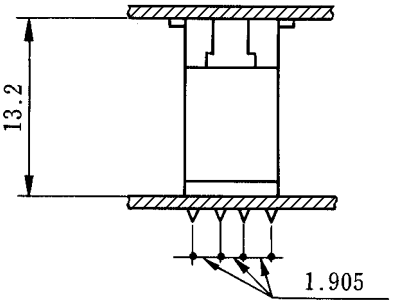


FX2C(A)1-∗P-1.27DSA(L)

FX2-∗P-1.27SV(L)

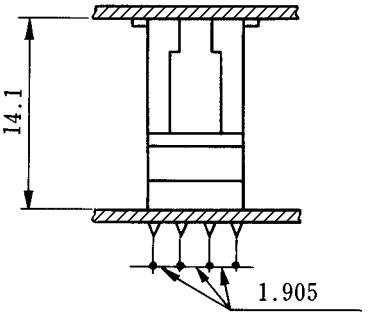


FX2C(A)2-∗S-1.27DSA(L)

FX2-∗S-1.27SV(L)

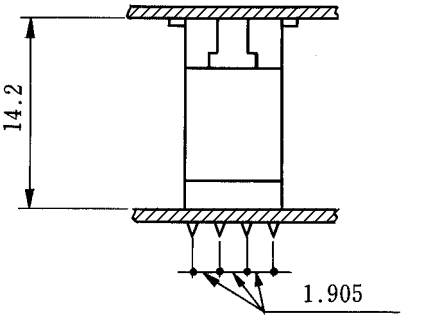


FX2C(A)2-∗P-1.27DSA(L)

FX2-∗P-1.27SV(L)

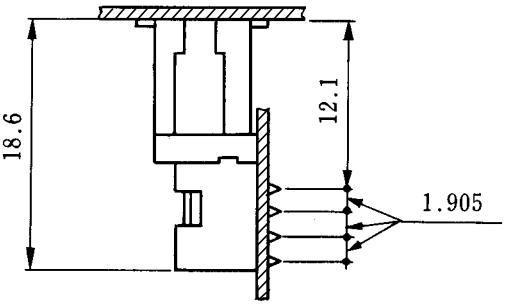


FX2-∗S-1.27DS(L)

FX2-∗S-1.27SV(L)

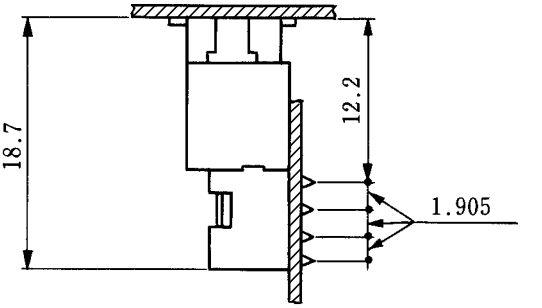


FX2-∗P-1.27DS(L)

Dec.1.2025 Copyright 2025 HIROSE ELECTRIC CO., LTD. All Rights Reserved.



Downloaded from Arrow.com.

## ◆SMT Type Application Pattern

FX2(A)-∗P-0.635SH

| Receptacle | A |
|---|---|
| FX2C(A) | 14.7 |
| FX2C(A)2 | 16.7 |

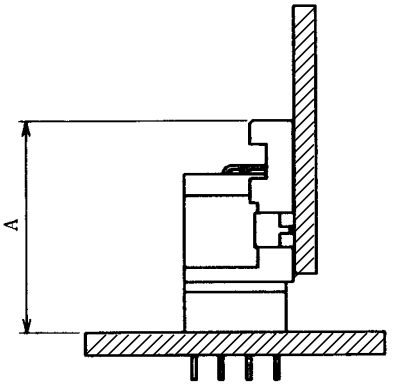


FX2C(A•2)-∗S-1.27DSA(L)

FX2(A)-∗P-0.635SH

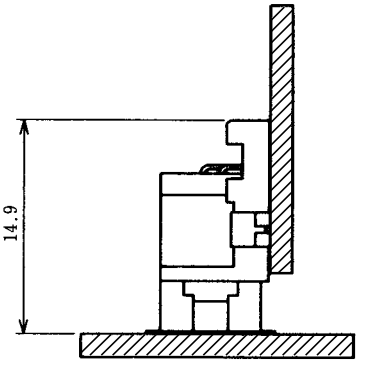


FX2-∗S-1.27SV(L)

FX2(A)-∗P-0.635SH

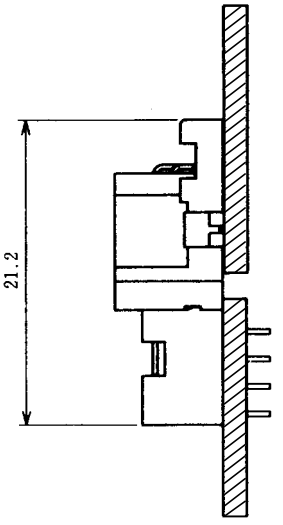


FX2-∗S-1.27DS(L)

FX2(A)-∗P-0.635SH

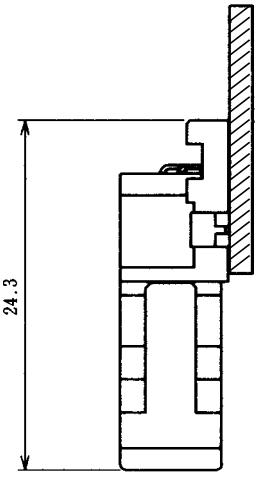


FX2BA-∗SA-1.27R

Dec.1.2025 Copyright 2025 HIROSE ELECTRIC CO., LTD. All Rights Reserved.



Downloaded from Arrow.com.

# ■Receptacle No Cleaning Type

## ●Straight Type

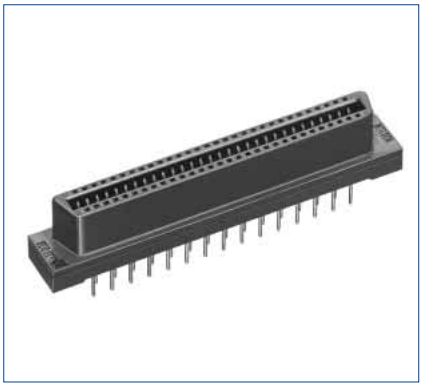

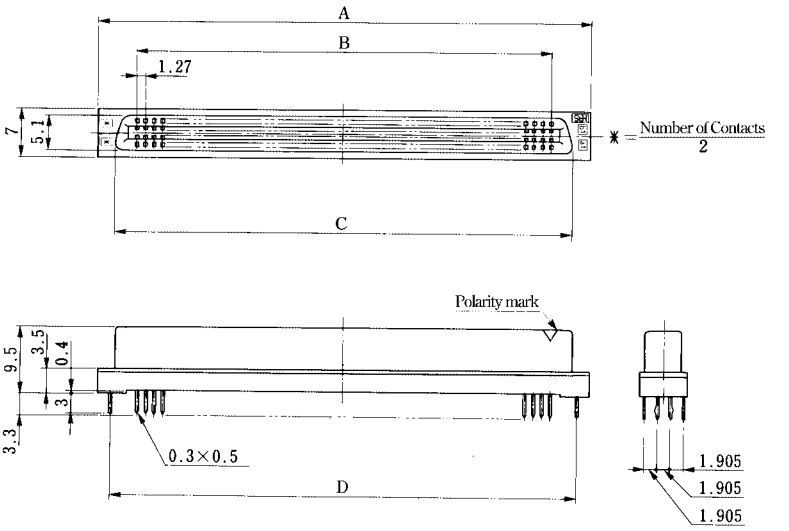


## ◆PCB mounting pattern

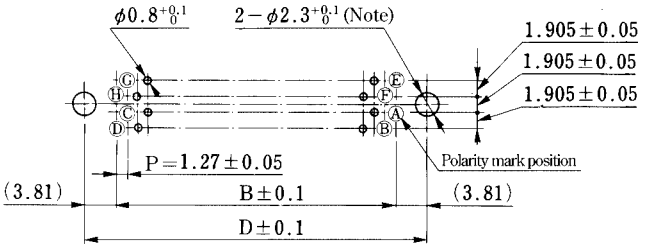


Note: Not required, if no prefixed pin is attached.

n=Number of Contacts

| | |
|---|---|
| Ⓐ a1 | Ⓔ b1 |
| Ⓑ a2 | Ⓕ b2 |
| Ⓒ $a\frac{n}{2}-1$ | Ⓖ $b\frac{n}{2}-1$ |
| Ⓓ $a\frac{n}{2}$ | Ⓗ $b\frac{n}{2}$ |

Unit : mm

| Part No. | HRS No. | No. of Contacts | A | B | C | D | RoHS |
|---|---|---|---|---|---|---|---|
| FX2C- 20S-1.27DSA(71) | 572-2401-7 71 | 20 | 22.75 | 11.43 | 17.63 | ———— | YES |
| FX2C- 20S-1.27DSAL(71) | 572-2451-5 71 | | | | | 19.05 | |
| FX2C- 32S-1.27DSA(71) | 572-2402-0 71 | 32 | 30.37 | 19.05 | 25.25 | ———— | |
| FX2C- 32S-1.27DSAL(71) | 572-2452-8 71 | | | | | 26.67 | |
| FX2C- 40S-1.27DSA(71) | 572-2403-2 71 | 40 | 35.45 | 24.13 | 30.33 | ———— | |
| FX2C- 40S-1.27DSAL(71) | 572-2453-0 71 | | | | | 31.75 | |
| FX2C- 52S-1.27DSA(71) | 572-2404-5 71 | 52 | 43.07 | 31.75 | 37.95 | ———— | |
| FX2C- 52S-1.27DSAL(71) | 572-2454-3 71 | | | | | 39.37 | |
| FX2C- 60S-1.27DSA(71) | 572-2405-8 71 | 60 | 48.15 | 36.83 | 43.03 | ———— | |
| FX2C- 60S-1.27DSAL(71) | 572-2455-6 71 | | | | | 44.45 | |
| FX2C- 68S-1.27DSA(71) | 572-2406-0 71 | 68 | 53.23 | 41.91 | 48.11 | ———— | |
| FX2C- 68S-1.27DSAL(71) | 572-2456-9 71 | | | | | 49.53 | |
| FX2C- 80S-1.27DSA(71) | 572-2407-3 71 | 80 | 60.85 | 49.53 | 55.73 | ———— | |
| FX2C- 80S-1.27DSAL(71) | 572-2457-1 71 | | | | | 57.15 | |
| FX2C-100S-1.27DSA(71) | 572-2408-6 71 | 100 | 73.55 | 62.23 | 68.43 | ———— | |
| FX2C-100S-1.27DSAL(71) | 572-2458-4 71 | | | | | 69.85 | |
| FX2C-120S-1.27DSA(71) | 572-2409-9 71 | 120 | 86.25 | 74.93 | 81.13 | ———— | |
| FX2C-120S-1.27DSAL(71) | 572-2459-7 71 | | | | | 82.55 | |

Dec.1.2025 Copyright 2025 HIROSE ELECTRIC CO., LTD. All Rights Reserved.



Downloaded from Arrow.com.

# ■Receptacle Cleaning Type

## ●Straight Type

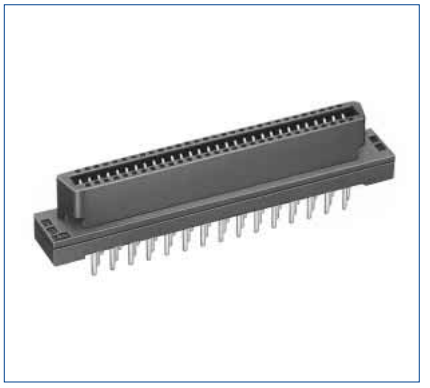

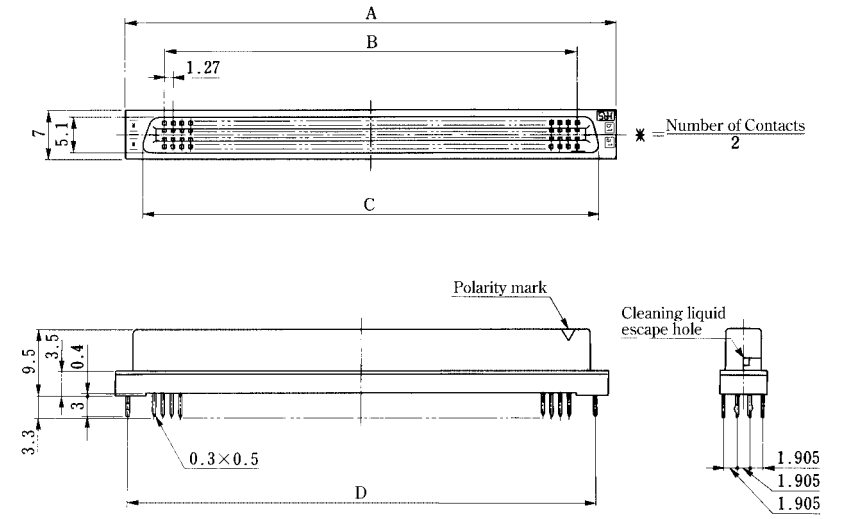


## ◆PCB mounting pattern

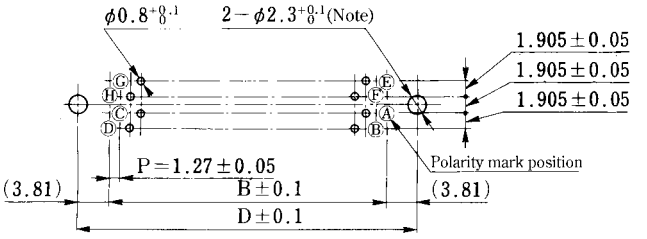


Note: Not required, if no prefixed pin is attached.

**n=Number of Contacts**

| | |
|---|---|
| Ⓐ a1 | Ⓔ b1 |
| Ⓑ a2 | Ⓕ b2 |
| Ⓒ $a\frac{n}{2}-1$ | Ⓖ $b\frac{n}{2}-1$ |
| Ⓓ $a\frac{n}{2}$ | Ⓗ $b\frac{n}{2}$ |

Unit : mm

| Part No. | HRS No. | No. of Contacts | A | B | C | D | RoHS |
|---|---|---|---|---|---|---|---|
| FX2CA- 20S-1.27DSA(71) | 572-2501-1 71 | 20 | 22.75 | 11.43 | 17.63 | ———— | YES |
| FX2CA- 20S-1.27DSAL(71) | 572-2551-0 71 | | | | | 19.05 | |
| FX2CA- 32S-1.27DSA(71) | 572-2502-4 71 | 32 | 30.37 | 19.05 | 25.25 | ———— | |
| FX2CA- 32S-1.27DSAL(71) | 572-2552-2 71 | | | | | 26.67 | |
| FX2CA- 40S-1.27DSA(71) | 572-2503-7 71 | 40 | 35.45 | 24.13 | 30.33 | ———— | |
| FX2CA- 40S-1.27DSAL(71) | 572-2553-5 71 | | | | | 31.75 | |
| FX2CA- 52S-1.27DSA(71) | 572-2504-0 71 | 52 | 43.07 | 31.75 | 37.95 | ———— | |
| FX2CA- 52S-1.27DSAL(71) | 572-2554-8 71 | | | | | 39.37 | |
| FX2CA- 60S-1.27DSA(71) | 572-2505-2 71 | 60 | 48.15 | 36.83 | 43.03 | ———— | |
| FX2CA- 60S-1.27DSAL(71) | 572-2555-0 71 | | | | | 44.45 | |
| FX2CA- 68S-1.27DSA(71) | 572-2506-5 71 | 68 | 53.23 | 41.91 | 48.11 | ———— | |
| FX2CA- 68S-1.27DSAL(71) | 572-2556-3 71 | | | | | 49.53 | |
| FX2CA- 80S-1.27DSA(71) | 572-2507-8 71 | 80 | 60.85 | 49.53 | 55.73 | ———— | |
| FX2CA- 80S-1.27DSAL(71) | 572-2557-6 71 | | | | | 57.15 | |
| FX2CA-100S-1.27DSA(71) | 572-2508-0 71 | 100 | 73.55 | 62.23 | 68.43 | ———— | |
| FX2CA-100S-1.27DSAL(71) | 572-2558-9 71 | | | | | 69.85 | |
| FX2CA-120S-1.27DSA(71) | 572-2509-3 71 | 120 | 86.25 | 74.93 | 81.13 | ———— | |
| FX2CA-120S-1.27DSAL(71) | 572-2559-1 71 | | | | | 82.55 | |

Dec.1.2025 Copyright 2025 HIROSE ELECTRIC CO., LTD. All Rights Reserved.



Downloaded from Arrow.com.

# ■Receptacle No Cleaning Type

## ●Straight Type

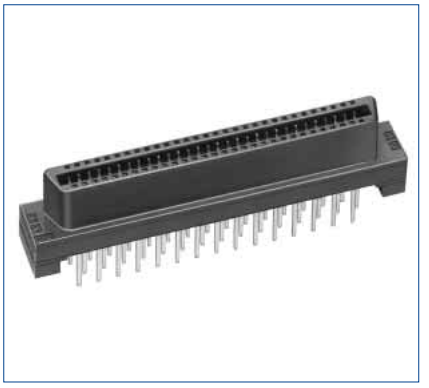

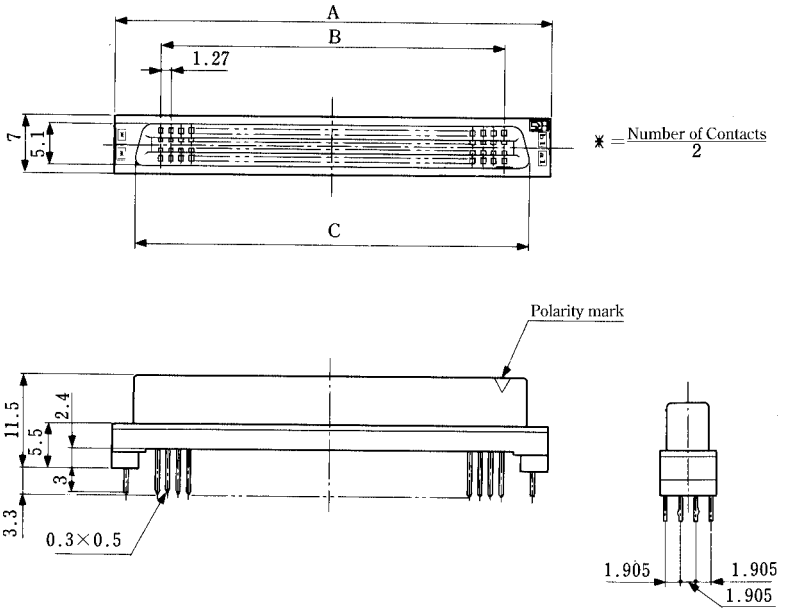


## ◆PCB mounting pattern

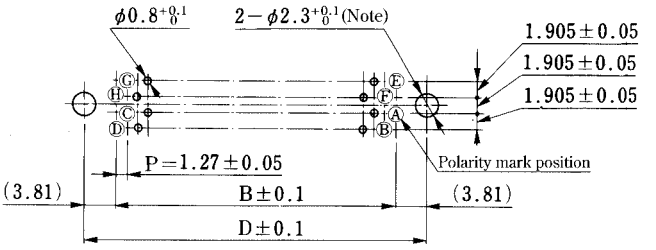


n = Number of Contacts

| | |
|---|---|
| Ⓐ a1 | Ⓔ b1 |
| Ⓑ a2 | Ⓕ b2 |
| Ⓒ $a\frac{n}{2}-1$ | Ⓖ $b\frac{n}{2}-1$ |
| Ⓓ $a\frac{n}{2}$ | Ⓗ $b\frac{n}{2}$ |

Note: Not required, if no prefixed pin is attached.

Unit : mm

| Part No. | HRS No. | No. of Contacts | A | B | C | D | RoHS |
|---|---|---|---|---|---|---|---|
| FX2C2- 20S-1.27DSA(71) | 572-2421-4 71 | 20 | 22.75 | 11.43 | 17.63 | ——— | YES |
| FX2C2- 20S-1.27DSAL(71) | 572-2471-2 71 | | | | | 19.05 | |
| FX2C2- 32S-1.27DSA(71) | 572-2422-7 71 | 32 | 30.37 | 19.05 | 25.25 | ——— | |
| FX2C2- 32S-1.27DSAL(71) | 572-2472-5 71 | | | | | 26.67 | |
| FX2C2- 40S-1.27DSA(71) | 572-2423-0 71 | 40 | 35.45 | 24.13 | 30.33 | ——— | |
| FX2C2- 40S-1.27DSAL(71) | 572-2473-8 71 | | | | | 31.75 | |
| FX2C2- 52S-1.27DSA(71) | 572-2424-2 71 | 52 | 43.07 | 31.75 | 37.95 | ——— | |
| FX2C2- 52S-1.27DSAL(71) | 572-2474-0 71 | | | | | 39.37 | |
| FX2C2- 60S-1.27DSA(71) | 572-2425-5 71 | 60 | 48.15 | 36.83 | 43.03 | ——— | |
| FX2C2- 60S-1.27DSAL(71) | 572-2475-3 71 | | | | | 44.45 | |
| FX2C2- 68S-1.27DSA(71) | 572-2426-8 71 | 68 | 53.23 | 41.91 | 48.11 | ——— | |
| FX2C2- 68S-1.27DSAL(71) | 572-2476-6 71 | | | | | 49.53 | |
| FX2C2- 80S-1.27DSA(71) | 572-2427-0 71 | 80 | 60.85 | 49.53 | 55.73 | ——— | |
| FX2C2- 80S-1.27DSAL(71) | 572-2477-9 71 | | | | | 57.15 | |
| FX2C2-100S-1.27DSA(71) | 572-2428-3 71 | 100 | 73.55 | 62.23 | 68.43 | ——— | |
| FX2C2-100S-1.27DSAL(71) | 572-2478-1 71 | | | | | 69.85 | |
| FX2C2-120S-1.27DSA(71) | 572-2429-6 71 | 120 | 86.25 | 74.93 | 81.13 | ——— | |
| FX2C2-120S-1.27DSAL(71) | 572-2479-4 71 | | | | | 82.55 | |

Dec.1.2025 Copyright 2025 HIROSE ELECTRIC CO., LTD. All Rights Reserved.



Downloaded from Arrow.com.

# ■Receptacle Cleaning Type

## ●Straight Type

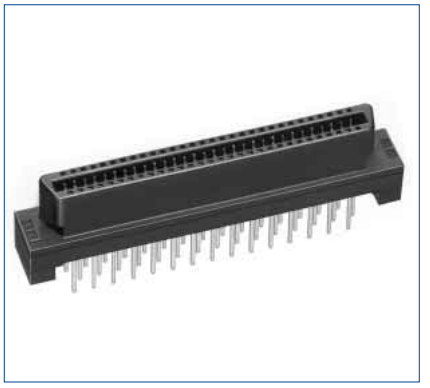

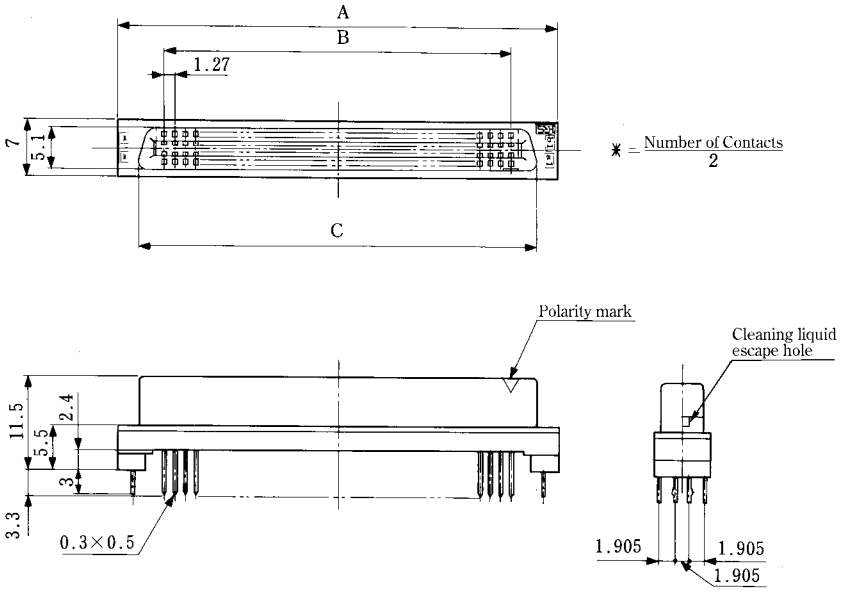


## ◆PCB mounting pattern

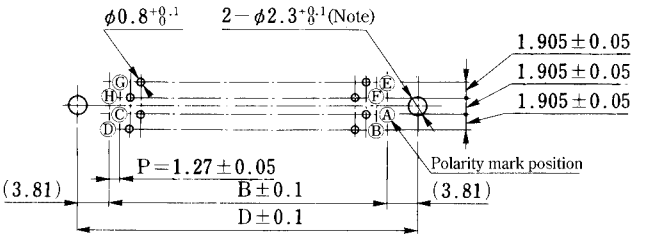


Note: Not required, if no prefixed pin is attached.

**n=Number of Contacts**

| | |
|---|---|
| Ⓐ a1 | Ⓔ b1 |
| Ⓑ a2 | Ⓕ b2 |
| Ⓒ $a\frac{n}{2}-1$ | Ⓖ $b\frac{n}{2}-1$ |
| Ⓓ $a\frac{n}{2}$ | Ⓗ $b\frac{n}{2}$ |

Unit : mm

| Part No. | HRS No. | No. of Contacts | A | B | C | D | RoHS |
|---|---|---|---|---|---|---|---|
| FX2CA2- 20S-1.27DSA(71) | 572-2521-9 71 | 20 | 22.75 | 11.43 | 17.63 | ——— | YES |
| FX2CA2- 20S-1.27DSAL(71) | 572-2571-7 71 | | | | | 19.05 | |
| FX2CA2- 32S-1.27DSA(71) | 572-2522-1 71 | 32 | 30.37 | 19.05 | 25.25 | ——— | |
| FX2CA2- 32S-1.27DSAL(71) | 572-2572-0 71 | | | | | 26.67 | |
| FX2CA2- 40S-1.27DSA(71) | 572-2523-4 71 | 40 | 35.45 | 24.13 | 30.33 | ——— | |
| FX2CA2- 40S-1.27DSAL(71) | 572-2573-2 71 | | | | | 31.75 | |
| FX2CA2- 52S-1.27DSA(71) | 572-2524-7 71 | 52 | 43.07 | 31.75 | 37.95 | ——— | |
| FX2CA2- 52S-1.27DSAL(71) | 572-2574-5 71 | | | | | 39.37 | |
| FX2CA2- 60S-1.27DSA(71) | 572-2525-0 71 | 60 | 48.15 | 36.83 | 43.03 | ——— | |
| FX2CA2- 60S-1.27DSAL(71) | 572-2575-8 71 | | | | | 44.45 | |
| FX2CA2- 68S-1.27DSA(71) | 572-2526-2 71 | 68 | 53.23 | 41.91 | 48.11 | ——— | |
| FX2CA2- 68S-1.27DSAL(71) | 572-2576-0 71 | | | | | 49.53 | |
| FX2CA2- 80S-1.27DSA(71) | 572-2527-5 71 | 80 | 60.85 | 49.53 | 55.73 | ——— | |
| FX2CA2- 80S-1.27DSAL(71) | 572-2577-3 71 | | | | | 57.15 | |
| FX2CA2-100S-1.27DSA(71) | 572-2528-8 71 | 100 | 73.55 | 62.23 | 68.43 | ——— | |
| FX2CA2-100S-1.27DSAL(71) | 572-2578-6 71 | | | | | 69.85 | |
| FX2CA2-120S-1.27DSA(71) | 572-2529-0 71 | 120 | 86.25 | 74.93 | 81.13 | ——— | |
| FX2CA2-120S-1.27DSAL(71) | 572-2579-9 71 | | | | | 82.55 | |

Dec.1.2025 Copyright 2025 HIROSE ELECTRIC CO., LTD. All Rights Reserved.



Downloaded from Arrow.com.

# ■Receptacle

## ●Right Angle Type

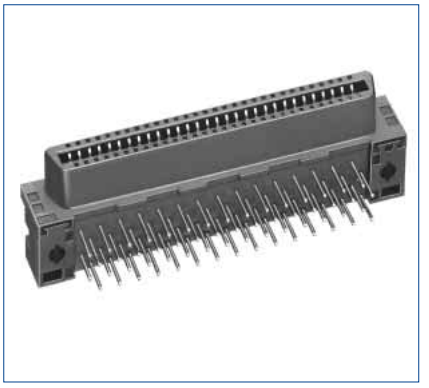

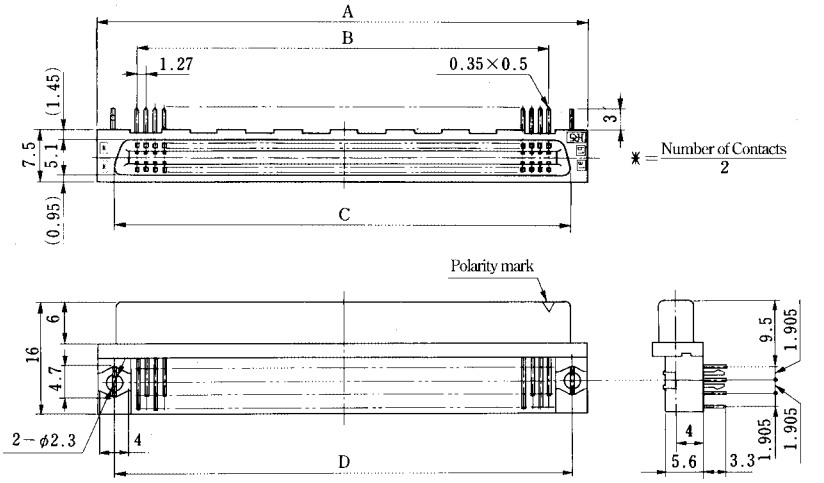


## ◆PCB mounting pattern

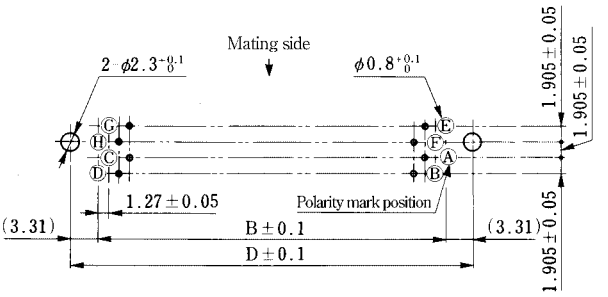


n = Number of Contacts

| | |
|---|---|
| Ⓐ a1 | Ⓔ b1 |
| Ⓑ a2 | Ⓕ b2 |
| Ⓒ $a\frac{n}{2}-1$ | Ⓖ $b\frac{n}{2}-1$ |
| Ⓓ $a\frac{n}{2}$ | Ⓗ $b\frac{n}{2}$ |

Unit : mm

| Part No. | HRS No. | No. of Contacts | A | B | C | D | D |
|---|---|---|---|---|---|---|---|
| FX2- 20S-1.27DS(71) | 572-2701-0 71 | 20 | 22.75 | 11.43 | 17.63 | 18.05 | YES |
| FX2- 20S-1.27DSL(71) | 572-2751-9 71 | | | | | | |
| FX2- 32S-1.27DS(71) | 572-2702-3 71 | 32 | 30.37 | 19.05 | 25.25 | 25.67 | |
| FX2- 32S-1.27DSL(71) | 572-2752-1 71 | | | | | | |
| FX2- 40S-1.27DS(71) | 572-2703-6 71 | 40 | 35.45 | 24.13 | 30.33 | 30.75 | |
| FX2- 40S-1.27DSL(71) | 572-2753-4 71 | | | | | | |
| FX2- 52S-1.27DS(71) | 572-2704-9 71 | 52 | 43.07 | 31.75 | 37.95 | 38.37 | |
| FX2- 52S-1.27DSL(71) | 572-2754-7 71 | | | | | | |
| FX2- 60S-1.27DS(71) | 572-2705-1 71 | 60 | 48.15 | 36.83 | 43.03 | 43.45 | |
| FX2- 60S-1.27DSL(71) | 572-2755-0 71 | | | | | | |
| FX2- 68S-1.27DS(71) | 572-2706-4 71 | 68 | 53.23 | 41.91 | 48.11 | 48.53 | |
| FX2- 68S-1.27DSL(71) | 572-2756-2 71 | | | | | | |
| FX2- 80S-1.27DS(71) | 572-2707-7 71 | 80 | 60.85 | 49.53 | 55.73 | 56.15 | |
| FX2- 80S-1.27DSL(71) | 572-2757-5 71 | | | | | | |
| FX2-100S-1.27DS(71) | 572-2708-0 71 | 100 | 73.55 | 62.23 | 68.43 | 68.85 | |
| FX2-100S-1.27DSL(71) | 572-2758-8 71 | | | | | | |
| FX2-120S-1.27DS(71) | 572-2709-2 71 | 120 | 86.25 | 74.93 | 81.13 | 81.55 | |
| FX2-120S-1.27DSL(71) | 572-2759-0 71 | | | | | | |

Dec.1.2025 Copyright 2025 HIROSE ELECTRIC CO., LTD. All Rights Reserved.



Downloaded from Arrow.com.

# ■Header

## ●Right Angle Type

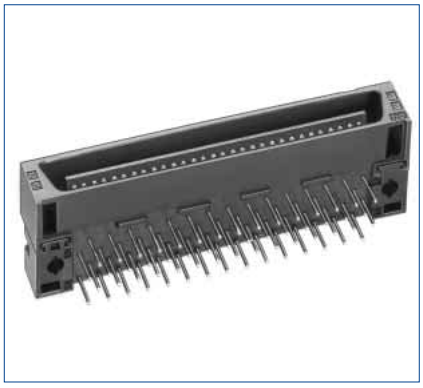

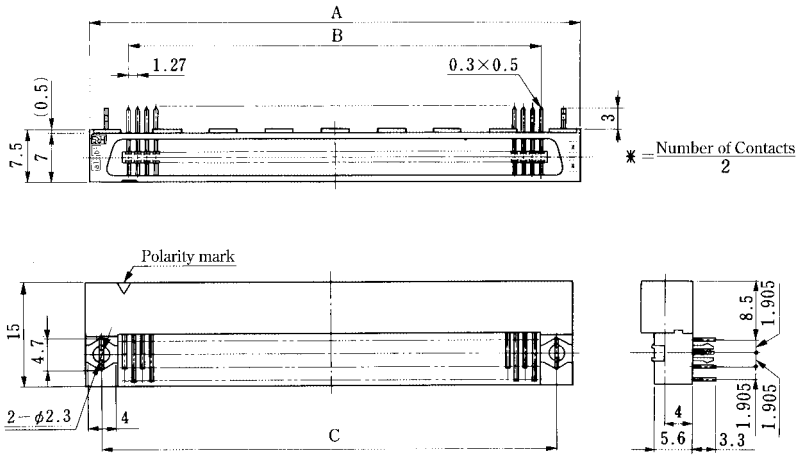


## ◆PCB mounting pattern

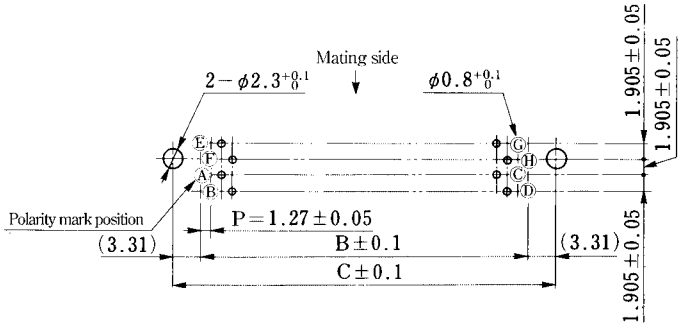


n = Number of Contacts

| | |
|---|---|
| Ⓐ a1 | Ⓔ b1 |
| Ⓑ a2 | Ⓕ b2 |
| Ⓒ $a\frac{n}{2}-1$ | Ⓖ $b\frac{n}{2}-1$ |
| Ⓓ $a\frac{n}{2}$ | Ⓗ $b\frac{n}{2}$ |

Unit : mm

| Part No. | HRS No. | No. of Contacts | A | B | C | RoHS |
|---|---|---|---|---|---|---|
| FX2- 20P-1.27DS(71) | 572-2601-6 71 | 20 | 22.75 | 11.43 | 18.05 | YES |
| FX2- 20P-1.27DSL(71) | 572-2651-4 71 | | | | | |
| FX2- 32P-1.27DS(71) | 572-2602-9 71 | 32 | 30.37 | 19.05 | 25.67 | |
| FX2- 32P-1.27DSL(71) | 572-2652-7 71 | | | | | |
| FX2- 40P-1.27DS(71) | 572-2603-1 71 | 40 | 35.45 | 24.13 | 30.75 | |
| FX2- 40P-1.27DSL(71) | 572-2653-0 71 | | | | | |
| FX2- 52P-1.27DS(71) | 572-2604-4 71 | 52 | 43.07 | 31.75 | 38.37 | |
| FX2- 52P-1.27DSL(71) | 572-2654-2 71 | | | | | |
| FX2- 60P-1.27DS(71) | 572-2605-7 71 | 60 | 48.15 | 36.83 | 43.45 | |
| FX2- 60P-1.27DSL(71) | 572-2655-5 71 | | | | | |
| FX2- 68P-1.27DS(71) | 572-2606-0 71 | 68 | 53.23 | 41.91 | 48.53 | |
| FX2- 68P-1.27DSL(71) | 572-2656-8 71 | | | | | |
| FX2- 80P-1.27DS(71) | 572-2607-2 71 | 80 | 60.85 | 49.53 | 56.15 | |
| FX2- 80P-1.27DSL(71) | 572-2657-0 71 | | | | | |
| FX2-100P-1.27DS(71) | 572-2608-5 71 | 100 | 73.55 | 62.23 | 68.85 | |
| FX2-100P-1.27DSL(71) | 572-2658-3 71 | | | | | |
| FX2-120P-1.27DS(71) | 572-2609-8 71 | 120 | 86.25 | 74.93 | 81.55 | |
| FX2-120P-1.27DSL(71) | 572-2659-6 71 | | | | | |

Dec.1.2025 Copyright 2025 HIROSE ELECTRIC CO., LTD. All Rights Reserved.



Downloaded from Arrow.com.

# ■Header No Cleaning Type

## ●Straight Type

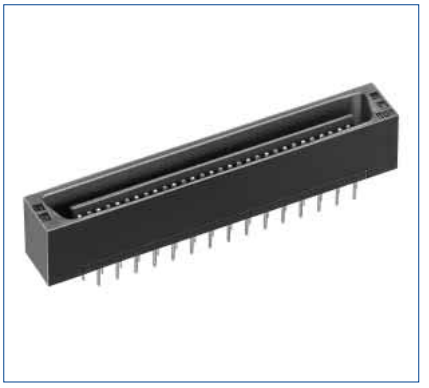

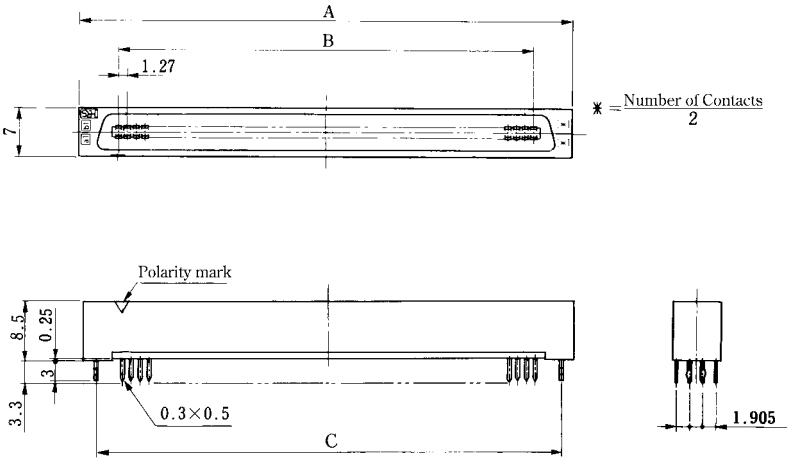


## ◆PCB mounting pattern

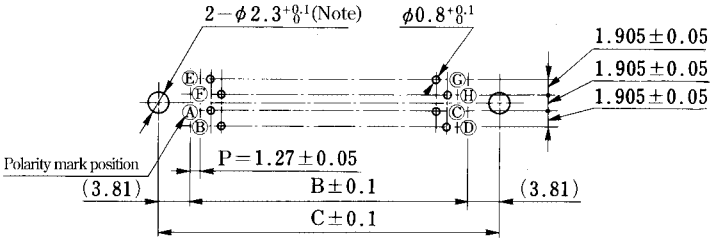


Note: Not required, if no prefixed pin is attached.

n = Number of Contacts

| | |
|---|---|
| Ⓐ a1 | Ⓔ b1 |
| Ⓑ a2 | Ⓕ b2 |
| Ⓒ $a\frac{n}{2}-1$ | Ⓖ $b\frac{n}{2}-1$ |
| Ⓓ $a\frac{n}{2}$ | Ⓗ $b\frac{n}{2}$ |

Unit : mm

| Part No. | HRS No. | No. of Contacts | A | B | C | RoHS |
|---|---|---|---|---|---|---|
| FX2C- 20P-1.27DSA(71) | 572-2201-8 71 | 20 | 22.75 | 11.43 | ——— | YES |
| FX2C- 20P-1.27DSAL(71) | 572-2251-6 71 | | | | 19.05 | |
| FX2C- 32P-1.27DSA(71) | 572-2202-0 71 | 32 | 30.37 | 19.05 | ——— | |
| FX2C- 32P-1.27DSAL(71) | 572-2252-9 71 | | | | 26.67 | |
| FX2C- 40P-1.27DSA(71) | 572-2203-3 71 | 40 | 35.45 | 24.13 | ——— | |
| FX2C- 40P-1.27DSAL(71) | 572-2253-1 71 | | | | 31.75 | |
| FX2C- 52P-1.27DSA(71) | 572-2204-6 71 | 52 | 43.07 | 31.75 | ——— | |
| FX2C- 52P-1.27DSAL(71) | 572-2254-4 71 | | | | 39.37 | |
| FX2C- 60P-1.27DSA(71) | 572-2205-9 71 | 60 | 48.15 | 36.83 | ——— | |
| FX2C- 60P-1.27DSAL(71) | 572-2255-7 71 | | | | 44.45 | |
| FX2C- 68P-1.27DSA(71) | 572-2206-1 71 | 68 | 53.23 | 41.91 | ——— | |
| FX2C- 68P-1.27DSAL(71) | 572-2256-0 71 | | | | 49.53 | |
| FX2C- 80P-1.27DSA(71) | 572-2207-4 71 | 80 | 60.85 | 49.53 | ——— | |
| FX2C- 80P-1.27DSAL(71) | 572-2257-2 71 | | | | 57.15 | |
| FX2C-100P-1.27DSA(71) | 572-2208-7 71 | 100 | 73.55 | 62.23 | ——— | |
| FX2C-100P-1.27DSAL(71) | 572-2258-5 71 | | | | 69.85 | |
| FX2C-120P-1.27DSA(71) | 572-2209-0 71 | 120 | 86.25 | 74.93 | ——— | |
| FX2C-120P-1.27DSAL(71) | 572-2259-8 71 | | | | 82.55 | |

Dec.1.2025 Copyright 2025 HIROSE ELECTRIC CO., LTD. All Rights Reserved.



Downloaded from Arrow.com.

# ■Header Cleaning Type

## ●Straight Type

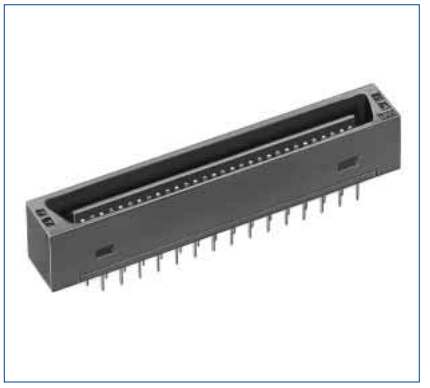

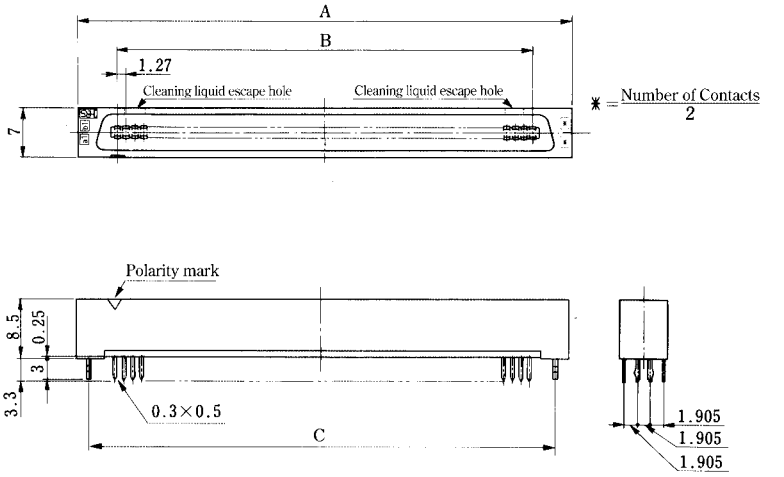


## ◆PCB mounting pattern

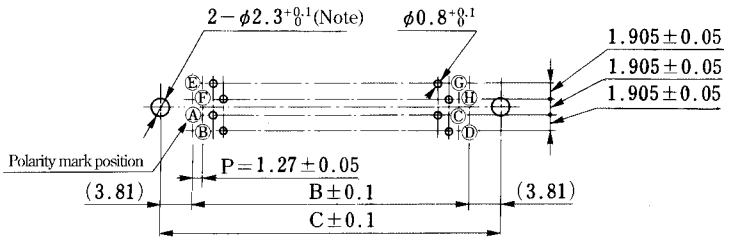


n＝Number of Contacts

Ⓐ a1　Ⓔ b1
Ⓑ a2　Ⓕ b2
Ⓒ $a\frac{n}{2}-1$　Ⓖ $b\frac{n}{2}-1$
Ⓓ $a\frac{n}{2}$　Ⓗ $b\frac{n}{2}$

Note: Not required, if no prefixed pin is attached.

Unit : mm

| Part No. | HRS No. | No. of Contacts | A | B | C | RoHS |
|---|---|---|---|---|---|---|
| FX2CA- 20P-1.27DSA(71) | 572-2301-2 71 | 20 | 22.75 | 11.43 | ———— | YES |
| FX2CA- 20P-1.27DSAL(71) | 572-2351-0 71 | | | | 19.05 | |
| FX2CA- 32P-1.27DSA(71) | 572-2302-5 71 | 32 | 30.37 | 19.05 | ———— | |
| FX2CA- 32P-1.27DSAL(71) | 572-2352-3 71 | | | | 26.67 | |
| FX2CA- 40P-1.27DSA(71) | 572-2303-8 71 | 40 | 35.45 | 24.13 | ———— | |
| FX2CA- 40P-1.27DSAL(71) | 572-2353-6 71 | | | | 31.75 | |
| FX2CA- 52P-1.27DSA(71) | 572-2304-0 71 | 52 | 43.07 | 31.75 | ———— | |
| FX2CA- 52P-1.27DSAL(71) | 572-2354-9 71 | | | | 39.37 | |
| FX2CA- 60P-1.27DSA(71) | 572-2305-3 71 | 60 | 48.15 | 36.83 | ———— | |
| FX2CA- 60P-1.27DSAL(71) | 572-2355-1 71 | | | | 44.45 | |
| FX2CA- 68P-1.27DSA(71) | 572-2306-6 71 | 68 | 53.23 | 41.91 | ———— | |
| FX2CA- 68P-1.27DSAL(71) | 572-2356-4 71 | | | | 49.53 | |
| FX2CA- 80P-1.27DSA(71) | 572-2307-9 71 | 80 | 60.85 | 49.53 | ———— | |
| FX2CA- 80P-1.27DSAL(71) | 572-2357-7 71 | | | | 57.15 | |
| FX2CA-100P-1.27DSA(71) | 572-2308-1 71 | 100 | 73.55 | 62.23 | ———— | |
| FX2CA-100P-1.27DSAL(71) | 572-2358-0 71 | | | | 69.85 | |
| FX2CA-120P-1.27DSA(71) | 572-2309-4 71 | 120 | 86.25 | 74.93 | ———— | |
| FX2CA-120P-1.27DSAL(71) | 572-2359-2 71 | | | | 82.55 | |

Dec.1.2025 Copyright 2025 HIROSE ELECTRIC CO., LTD. All Rights Reserved.



Downloaded from Arrow.com.

# ■Header No Cleaning Type

## ●Straight Type

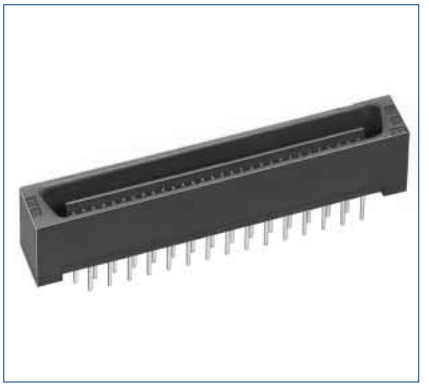

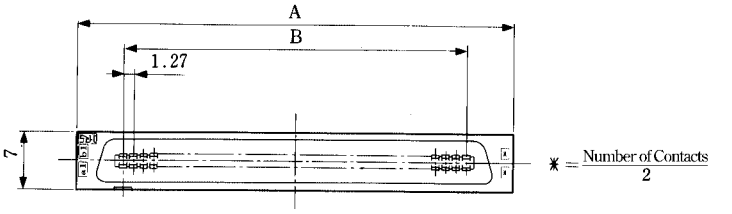


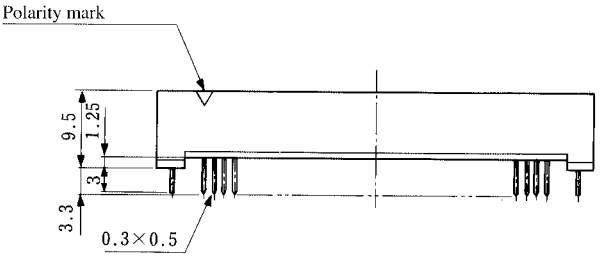


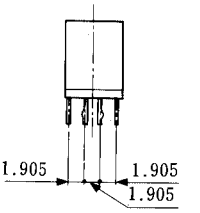


## ◆PCB mounting pattern

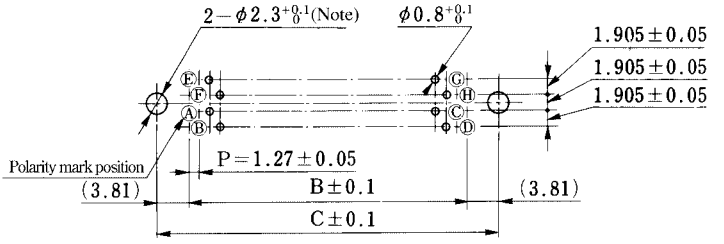


**n = Number of Contacts**

| | |
|---|---|
| Ⓐ a1 | Ⓔ b1 |
| Ⓑ a2 | Ⓕ b2 |
| Ⓒ $a\frac{n}{2}-1$ | Ⓖ $b\frac{n}{2}-1$ |
| Ⓓ $a\frac{n}{2}$ | Ⓗ $b\frac{n}{2}$ |

Note: Not required, if no prefixed pin is attached.

Unit : mm

| Part No. | HRS No. | No. of Contacts | A | B | C | RoHS |
|---|---|---|---|---|---|---|
| FX2C1- 20P-1.27DSA(71) | 572-2211-1 71 | 20 | 22.75 | 11.43 | — | YES |
| FX2C1- 20P-1.27DSAL(71) | 572-2261-0 71 | | | | 19.05 | |
| FX2C1- 32P-1.27DSA(71) | 572-2212-4 71 | 32 | 30.37 | 19.05 | — | |
| FX2C1- 32P-1.27DSAL(71) | 572-2262-2 71 | | | | 26.67 | |
| FX2C1- 40P-1.27DSA(71) | 572-2213-7 71 | 40 | 35.45 | 24.13 | — | |
| FX2C1- 40P-1.27DSAL(71) | 572-2263-5 71 | | | | 31.75 | |
| FX2C1- 52P-1.27DSA(71) | 572-2214-0 71 | 52 | 43.07 | 31.75 | — | |
| FX2C1- 52P-1.27DSAL(71) | 572-2264-8 71 | | | | 39.37 | |
| FX2C1- 60P-1.27DSA(71) | 572-2215-2 71 | 60 | 48.15 | 36.83 | — | |
| FX2C1- 60P-1.27DSAL(71) | 572-2265-0 71 | | | | 44.45 | |
| FX2C1- 68P-1.27DSA(71) | 572-2216-5 71 | 68 | 53.23 | 41.91 | — | |
| FX2C1- 68P-1.27DSAL(71) | 572-2266-3 71 | | | | 49.53 | |
| FX2C1- 80P-1.27DSA(71) | 572-2217-8 71 | 80 | 60.85 | 49.53 | — | |
| FX2C1- 80P-1.27DSAL(71) | 572-2267-6 71 | | | | 57.15 | |
| FX2C1-100P-1.27DSA(71) | 572-2218-0 71 | 100 | 73.55 | 62.23 | — | |
| FX2C1-100P-1.27DSAL(71) | 572-2268-9 71 | | | | 69.85 | |
| FX2C1-120P-1.27DSA(71) | 572-2219-3 71 | 120 | 86.25 | 74.93 | — | |
| FX2C1-120P-1.27DSAL(71) | 572-2269-1 71 | | | | 82.55 | |

Dec.1.2025 Copyright 2025 HIROSE ELECTRIC CO., LTD. All Rights Reserved.



Downloaded from Arrow.com.

# ■Header Cleaning Type

## ●Straight Type

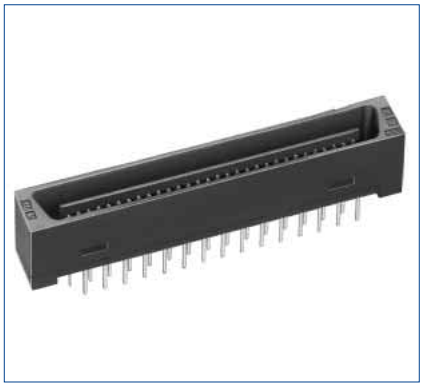

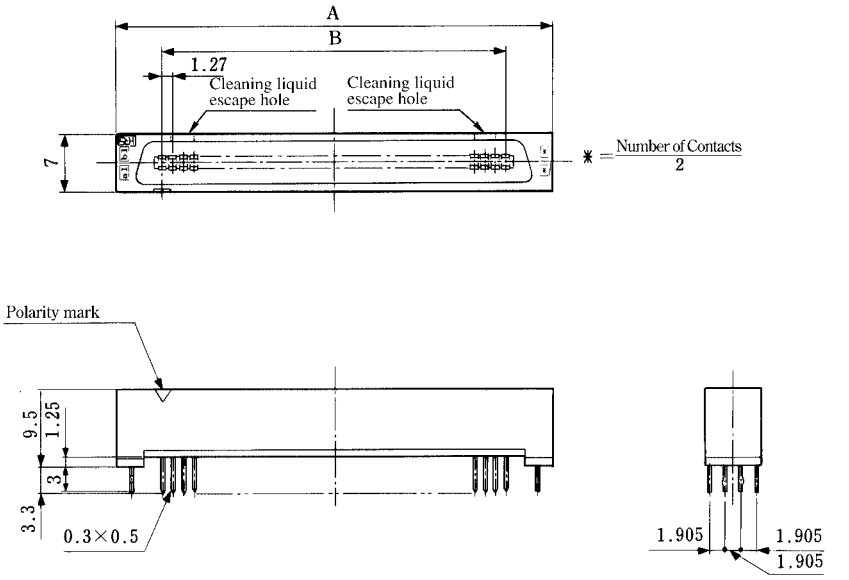


# ◆PCB mounting pattern

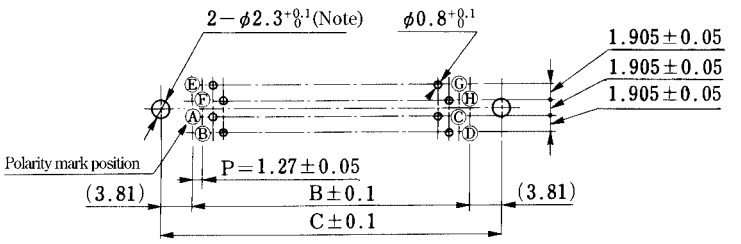


Note: Not required, if no prefixed pin is attached.

**n = Number of Contacts**

| | |
|---|---|
| Ⓐ a1 | Ⓔ b1 |
| Ⓑ a2 | Ⓕ b2 |
| Ⓒ $a\frac{n}{2}-1$ | Ⓖ $b\frac{n}{2}-1$ |
| Ⓓ $a\frac{n}{2}$ | Ⓗ $b\frac{n}{2}$ |

Unit : mm

| Part No. | HRS No. | No. of Contacts | A | B | C | RoHS |
|---|---|---|---|---|---|---|
| FX2CA1- 20P-1.27DSA(71) | 572-2311-6 71 | 20 | 22.75 | 11.43 | — | YES |
| FX2CA1- 20P-1.27DSAL(71) | 572-2361-4 71 | | | | 19.05 | |
| FX2CA1- 32P-1.27DSA(71) | 572-2312-9 71 | 32 | 30.37 | 19.05 | — | |
| FX2CA1- 32P-1.27DSAL(71) | 572-2362-7 71 | | | | 26.67 | |
| FX2CA1- 40P-1.27DSA(71) | 572-2313-1 71 | 40 | 35.45 | 24.13 | — | |
| FX2CA1- 40P-1.27DSAL(71) | 572-2363-0 71 | | | | 31.75 | |
| FX2CA1- 52P-1.27DSA(71) | 572-2314-4 71 | 52 | 43.07 | 31.75 | — | |
| FX2CA1- 52P-1.27DSAL(71) | 572-2364-2 71 | | | | 39.37 | |
| FX2CA1- 60P-1.27DSA(71) | 572-2315-7 71 | 60 | 48.15 | 36.83 | — | |
| FX2CA1- 60P-1.27DSAL(71) | 572-2365-5 71 | | | | 44.45 | |
| FX2CA1- 68P-1.27DSA(71) | 572-2316-0 71 | 68 | 53.23 | 41.91 | — | |
| FX2CA1- 68P-1.27DSAL(71) | 572-2366-8 71 | | | | 49.53 | |
| FX2CA1- 80P-1.27DSA(71) | 572-2317-2 71 | 80 | 60.85 | 49.53 | — | |
| FX2CA1- 80P-1.27DSAL(71) | 572-2367-0 71 | | | | 57.15 | |
| FX2CA1-100P-1.27DSA(71) | 572-2318-5 71 | 100 | 73.55 | 62.23 | — | |
| FX2CA1-100P-1.27DSAL(71) | 572-2368-3 71 | | | | 69.85 | |
| FX2CA1-120P-1.27DSA(71) | 572-2319-8 71 | 120 | 86.25 | 74.93 | — | |
| FX2CA1-120P-1.27DSAL(71) | 572-2369-6 71 | | | | 82.55 | |

Dec.1.2025 Copyright 2025 HIROSE ELECTRIC CO., LTD. All Rights Reserved.



Downloaded from Arrow.com.

# ■Header No Cleaning Type

## ●Straight Type

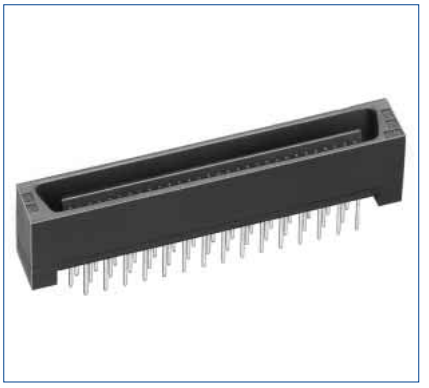

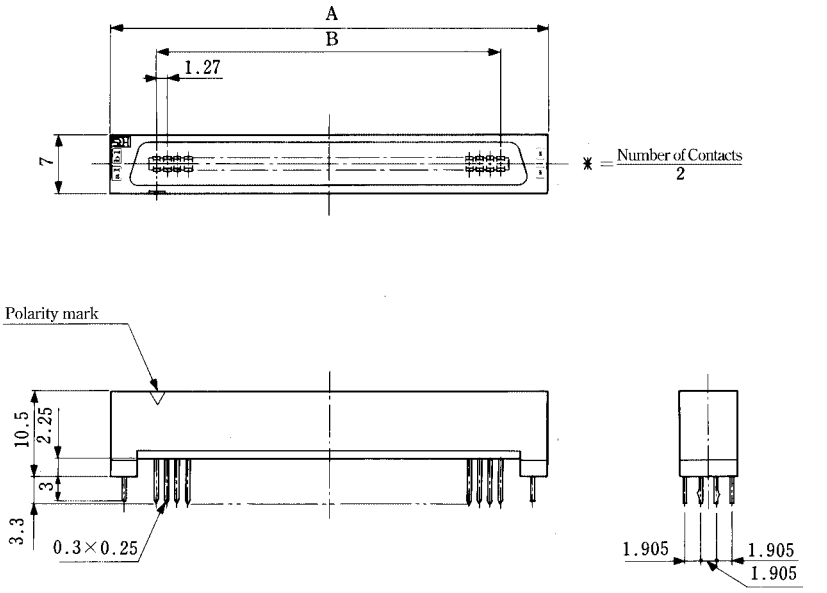


## ◆PCB mounting pattern

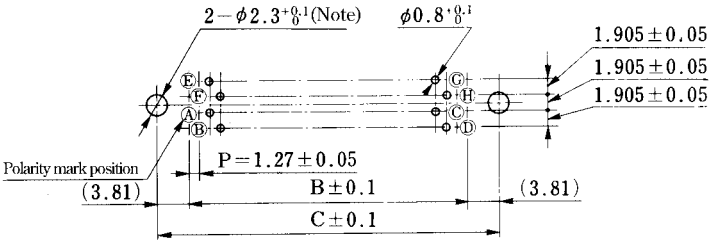


n = Number of Contacts

| | |
|---|---|
| Ⓐ a1 | Ⓔ b1 |
| Ⓑ a2 | Ⓕ b2 |
| Ⓒ $a\frac{n}{2}-1$ | Ⓖ $b\frac{n}{2}-1$ |
| Ⓓ $a\frac{n}{2}$ | Ⓗ $b\frac{n}{2}$ |

Note: Not required, if no prefixed pin is attached.

Unit : mm

| Part No. | HRS No. | No. of Contacts | A | B | C | RoHS |
|---|---|---|---|---|---|---|
| FX2C2- 20P-1.27DSA(71) | 572-2221-5 71 | 20 | 22.75 | 11.43 | — | YES |
| FX2C2- 20P-1.27DSAL(71) | 572-2271-3 71 | | | | 19.05 | |
| FX2C2- 32P-1.27DSA(71) | 572-2222-8 71 | 32 | 30.37 | 19.05 | — | |
| FX2C2- 32P-1.27DSAL(71) | 572-2272-6 71 | | | | 26.67 | |
| FX2C2- 40P-1.27DSA(71) | 572-2223-0 71 | 40 | 35.45 | 24.13 | — | |
| FX2C2- 40P-1.27DSAL(71) | 572-2273-9 71 | | | | 31.75 | |
| FX2C2- 52P-1.27DSA(71) | 572-2224-3 71 | 52 | 43.07 | 31.75 | — | |
| FX2C2- 52P-1.27DSAL(71) | 572-2274-1 71 | | | | 39.37 | |
| FX2C2- 60P-1.27DSA(71) | 572-2225-6 71 | 60 | 48.15 | 36.83 | — | |
| FX2C2- 60P-1.27DSAL(71) | 572-2275-4 71 | | | | 44.45 | |
| FX2C2- 68P-1.27DSA(71) | 572-2226-9 71 | 68 | 53.23 | 41.91 | — | |
| FX2C2- 68P-1.27DSAL(71) | 572-2276-7 71 | | | | 49.53 | |
| FX2C2- 80P-1.27DSA(71) | 572-2227-1 71 | 80 | 60.85 | 49.53 | — | |
| FX2C2- 80P-1.27DSAL(71) | 572-2277-0 71 | | | | 57.15 | |
| FX2C2-100P-1.27DSA(71) | 572-2228-4 71 | 100 | 73.55 | 62.23 | — | |
| FX2C2-100P-1.27DSAL(71) | 572-2278-2 71 | | | | 69.85 | |
| FX2C2-120P-1.27DSA(71) | 572-2229-7 71 | 120 | 86.25 | 74.93 | — | |
| FX2C2-120P-1.27DSAL(71) | 572-2279-5 71 | | | | 82.55 | |

Dec.1.2025 Copyright 2025 HIROSE ELECTRIC CO., LTD. All Rights Reserved.



Downloaded from Arrow.com.

# ■Header Cleaning Type

## ●Straight Type

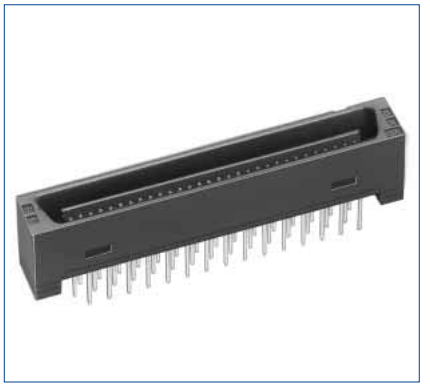

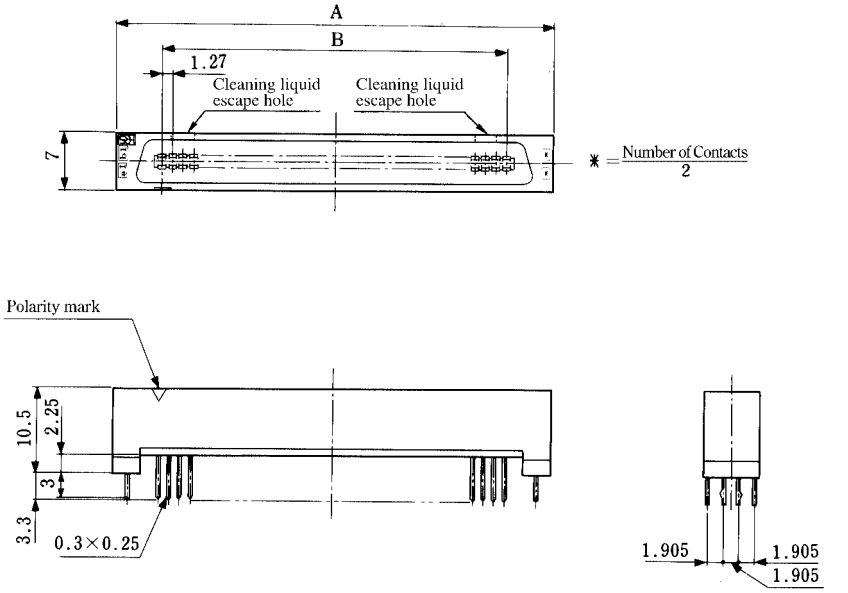


# ◆PCB mounting pattern

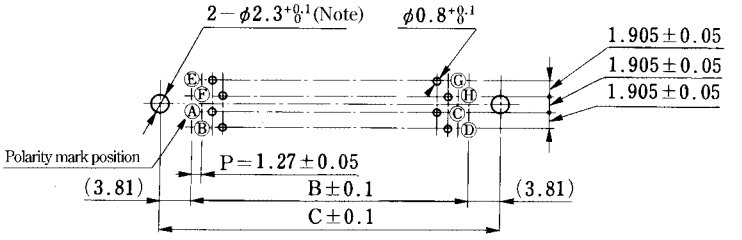


Note: Not required, if no prefixed pin is attached.

**n = Number of Contacts**

| | |
|---|---|
| Ⓐ a1 | Ⓔ b1 |
| Ⓑ a2 | Ⓕ b2 |
| Ⓒ $a\frac{n}{2}-1$ | Ⓖ $b\frac{n}{2}-1$ |
| Ⓓ $a\frac{n}{2}$ | Ⓗ $b\frac{n}{2}$ |

Unit : mm

| Part No. | HRS No. | No. of Contacts | A | B | C | RoHS |
|---|---|---|---|---|---|---|
| FX2CA2- 20P-1.27DSA(71) | 572-2321-0 71 | 20 | 22.75 | 11.43 | — | YES |
| FX2CA2- 20P-1.27DSAL(71) | 572-2371-8 71 | | | | 19.05 | |
| FX2CA2- 32P-1.27DSA(71) | 572-2322-2 71 | 32 | 30.37 | 19.05 | — | |
| FX2CA2- 32P-1.27DSAL(71) | 572-2372-0 71 | | | | 26.67 | |
| FX2CA2- 40P-1.27DSA(71) | 572-2323-5 71 | 40 | 35.45 | 24.13 | — | |
| FX2CA2- 40P-1.27DSAL(71) | 572-2373-3 71 | | | | 31.75 | |
| FX2CA2- 52P-1.27DSA(71) | 572-2324-8 71 | 52 | 43.07 | 31.75 | — | |
| FX2CA2- 52P-1.27DSAL(71) | 572-2374-6 71 | | | | 39.37 | |
| FX2CA2- 60P-1.27DSA(71) | 572-2325-0 71 | 60 | 48.15 | 36.83 | — | |
| FX2CA2- 60P-1.27DSAL(71) | 572-2375-9 71 | | | | 44.45 | |
| FX2CA2- 68P-1.27DSA(71) | 572-2326-3 71 | 68 | 53.23 | 41.91 | — | |
| FX2CA2- 68P-1.27DSAL(71) | 572-2376-1 71 | | | | 49.53 | |
| FX2CA2- 80P-1.27DSA(71) | 572-2327-6 71 | 80 | 60.85 | 49.53 | — | |
| FX2CA2- 80P-1.27DSAL(71) | 572-2377-4 71 | | | | 57.15 | |
| FX2CA2-100P-1.27DSA(71) | 572-2328-9 71 | 100 | 73.55 | 62.23 | — | |
| FX2CA2-100P-1.27DSAL(71) | 572-2378-7 71 | | | | 69.85 | |
| FX2CA2-120P-1.27DSA(71) | 572-2329-1 71 | 120 | 86.25 | 74.93 | — | |
| FX2CA2-120P-1.27DSAL(71) | 572-2379-0 71 | | | | 82.55 | |

Dec.1.2025 Copyright 2025 HIROSE ELECTRIC CO., LTD. All Rights Reserved.



Downloaded from Arrow.com.

# ■Receptacle SMT Type

## ●Straight Type

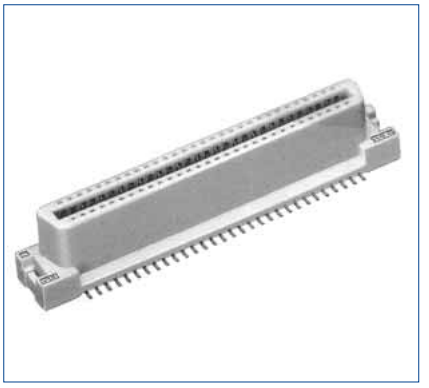

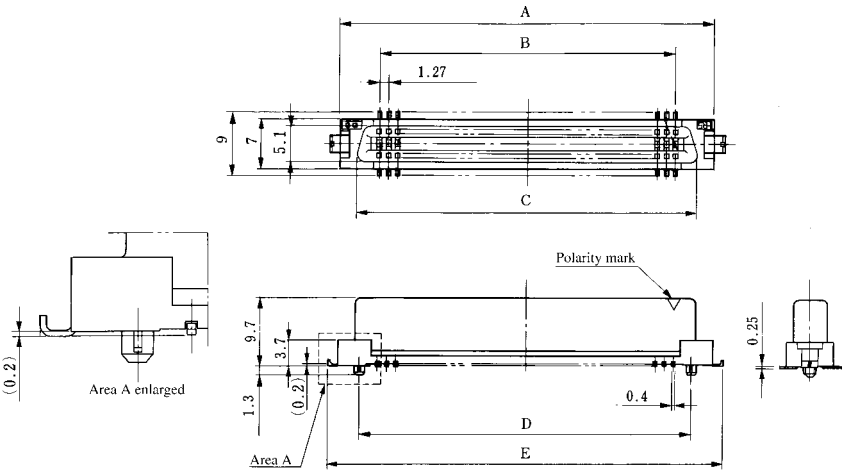


Note 1 : The 120 contacts type differs in the style.
Note 2 : The connector positioning bosses are constructed to press fit into the board with light force. When mounting on the board, press the connector lightly from the top and check that the positioning bosses are securely inserted in the board holes and that the connector leads are engaged in the board.
The recommended boss hole for use with automatic mounting is illustrated in fig. 1.

## ◆PCB mounting pattern

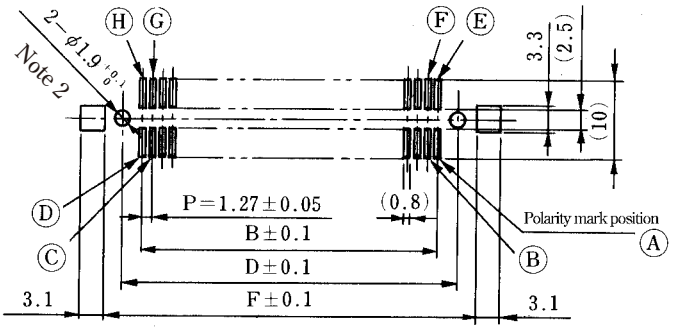


**n = Number of Contacts**

| | |
|---|---|
| Ⓐ a1 | Ⓔ b1 |
| Ⓑ a2 | Ⓕ b2 |
| Ⓒ $a\frac{n}{2}-1$ | Ⓖ $b\frac{n}{2}-1$ |
| Ⓓ $a\frac{n}{2}$ | Ⓗ $b\frac{n}{2}$ |

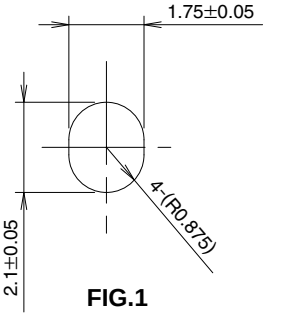


FIG.1

Unit : mm

| Part No. | HRS No. | No. of Contacts | A | B | C | D | E | F | RoHS |
|---|---|---|---|---|---|---|---|---|---|
| FX2- 20S-1.27SV(71) | 572-2101-3 71 | 20 | 22.75 | 11.43 | 17.63 | 16.51 | — | — | YES |
| FX2- 20S-1.27SVL(71) | 572-2151-1 71 | | | | | | 25.75 | 21.15 | |
| FX2- 32S-1.27SV(71) | 572-2102-6 71 | 32 | 30.37 | 19.05 | 25.25 | 24.13 | — | — | |
| FX2- 32S-1.27SVL(71) | 572-2152-4 71 | | | | | | 33.37 | 28.77 | |
| FX2- 40S-1.27SV(71) | 572-2103-9 71 | 40 | 35.45 | 24.13 | 30.33 | 29.21 | — | — | |
| FX2- 40S-1.27SVL(71) | 572-2153-7 71 | | | | | | 38.45 | 33.85 | |
| FX2- 52S-1.27SV(71) | 572-2104-1 71 | 52 | 43.07 | 31.75 | 37.95 | 36.83 | — | — | |
| FX2- 52S-1.27SVL(71) | 572-2154-0 71 | | | | | | 46.07 | 41.47 | |
| FX2- 60S-1.27SV(71) | 572-2105-4 71 | 60 | 48.15 | 36.83 | 43.03 | 41.91 | — | — | |
| FX2- 60S-1.27SVL(71) | 572-2155-2 71 | | | | | | 51.15 | 46.55 | |
| FX2- 68S-1.27SV(71) | 572-2106-7 71 | 68 | 53.23 | 41.91 | 48.11 | 46.99 | — | — | |
| FX2- 68S-1.27SVL(71) | 572-2156-5 71 | | | | | | 56.23 | 51.63 | |
| FX2- 80S-1.27SV(71) | 572-2107-0 71 | 80 | 60.85 | 49.53 | 55.73 | 54.61 | — | — | |
| FX2- 80S-1.27SVL(71) | 572-2157-8 71 | | | | | | 63.85 | 59.25 | |
| FX2-100S-1.27SV(71) | 572-2108-2 71 | 100 | 73.55 | 62.23 | 68.43 | 67.31 | — | — | |
| FX2-100S-1.27SVL(71) | 572-2158-0 71 | | | | | | 76.55 | 71.95 | |
| FX2-120S-1.27SV(71) | 572-2109-5 71 | 120 | 86.25 | 74.93 | 81.13 | 80.01 | — | — | |
| FX2-120S-1.27SVL(71) | 572-2159-3 71 | | | | | | 89.25 | 84.65 | |

Dec.1.2025 Copyright 2025 HIROSE ELECTRIC CO., LTD. All Rights Reserved.



Downloaded from Arrow.com.

# ■Header SMT Type

## ●Straight Type

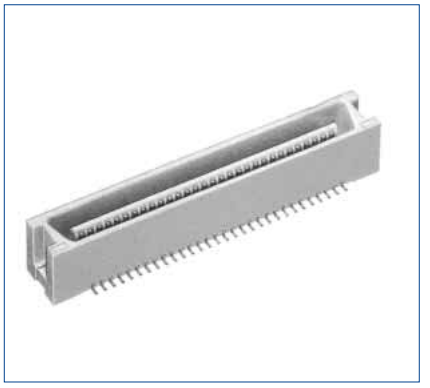

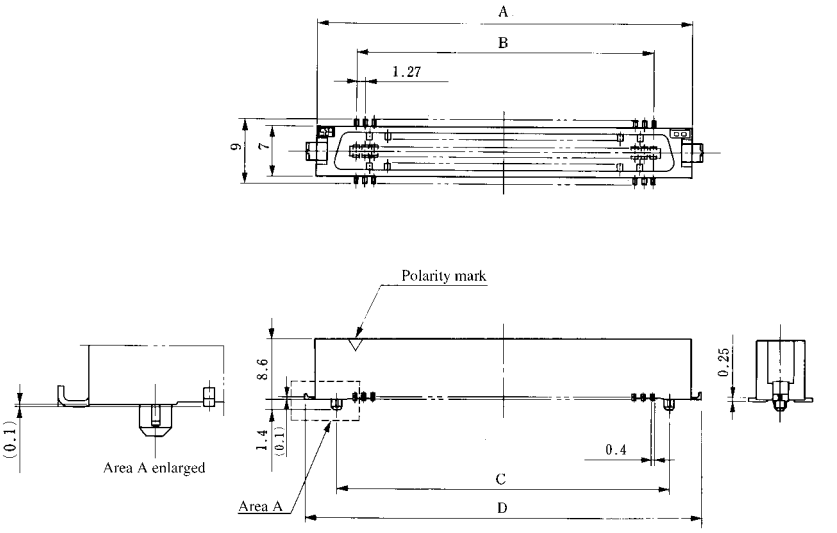


Note : The connector positioning bosses are constructed to press fit into the board with light force. When mounting on the board, press the connector lightly from the top and check that the positioning bosses are securely inserted in the board holes and that the connector leads are engaged in the board.
The recommended boss hole for use with automatic mounting is illustrated in fig. 1.

## ◆PCB mounting pattern

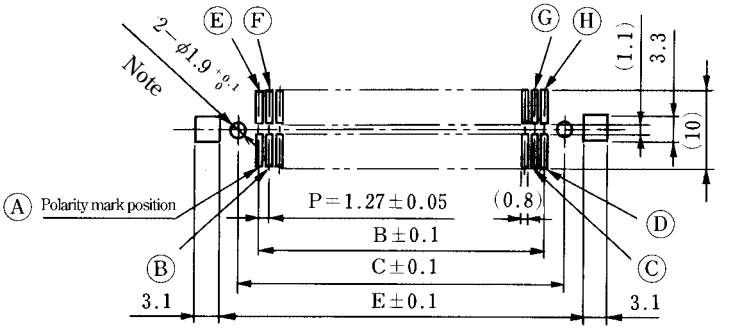


**n = Number of Contacts**

| | |
|---|---|
| Ⓐ a1 | Ⓔ b1 |
| Ⓑ a2 | Ⓕ b2 |
| Ⓒ $a\frac{n}{2}-1$ | Ⓖ $b\frac{n}{2}-1$ |
| Ⓓ $a\frac{n}{2}$ | Ⓗ $b\frac{n}{2}$ |

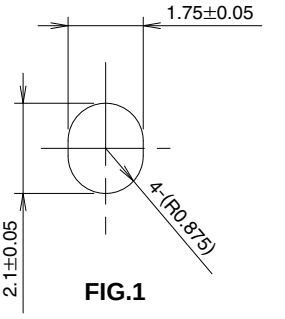


FIG.1

Unit : mm

| Part No. | HRS No. | No. of Contacts | A | B | C | D | E | RoHS |
|---|---|---|---|---|---|---|---|---|
| FX2- 20P-1.27SV(71) | 572-2001-9 71 | 20 | 22.75 | 11.43 | 16.51 | — | — | YES |
| FX2- 20P-1.27SVL(71) | 572-2051-7 71 | | | | | 25.75 | 21.15 | |
| FX2- 32P-1.27SV(71) | 572-2002-1 71 | 32 | 30.37 | 19.05 | 24.13 | — | — | |
| FX2- 32P-1.27SVL(71) | 572-2052-0 71 | | | | | 33.37 | 28.77 | |
| FX2- 40P-1.27SV(71) | 572-2003-4 71 | 40 | 35.45 | 24.13 | 29.21 | — | — | |
| FX2- 40P-1.27SVL(71) | 572-2053-2 71 | | | | | 38.45 | 33.85 | |
| FX2- 52P-1.27SV(71) | 572-2004-7 71 | 52 | 43.07 | 31.75 | 36.83 | — | — | |
| FX2- 52P-1.27SVL(71) | 572-2054-5 71 | | | | | 46.07 | 41.47 | |
| FX2- 60P-1.27SV(71) | 572-2005-0 71 | 60 | 48.15 | 36.83 | 41.91 | — | — | |
| FX2- 60P-1.27SVL(71) | 572-2055-8 71 | | | | | 51.15 | 46.55 | |
| FX2- 68P-1.27SV(71) | 572-2006-2 71 | 68 | 53.23 | 41.91 | 46.99 | — | — | |
| FX2- 68P-1.27SVL(71) | 572-2056-0 71 | | | | | 56.23 | 51.63 | |
| FX2- 80P-1.27SV(71) | 572-2007-5 71 | 80 | 60.85 | 49.53 | 54.61 | — | — | |
| FX2- 80P-1.27SVL(71) | 572-2057-3 71 | | | | | 63.85 | 59.25 | |
| FX2-100P-1.27SV(71) | 572-2008-8 71 | 100 | 73.55 | 62.23 | 67.31 | — | — | |
| FX2-100P-1.27SVL(71) | 572-2058-6 71 | | | | | 76.55 | 71.95 | |
| FX2-120P-1.27SV(71) | 572-2009-0 71 | 120 | 86.25 | 74.93 | 80.01 | — | — | |
| FX2-120P-1.27SVL(71) | 572-2059-9 71 | | | | | 89.25 | 84.65 | |

Dec.1.2025 Copyright 2025 HIROSE ELECTRIC CO., LTD. All Rights Reserved.



Downloaded from Arrow.com.

# ■Header SMT Type

## ●Right Angle Type

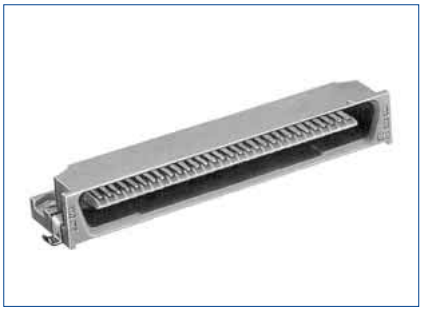

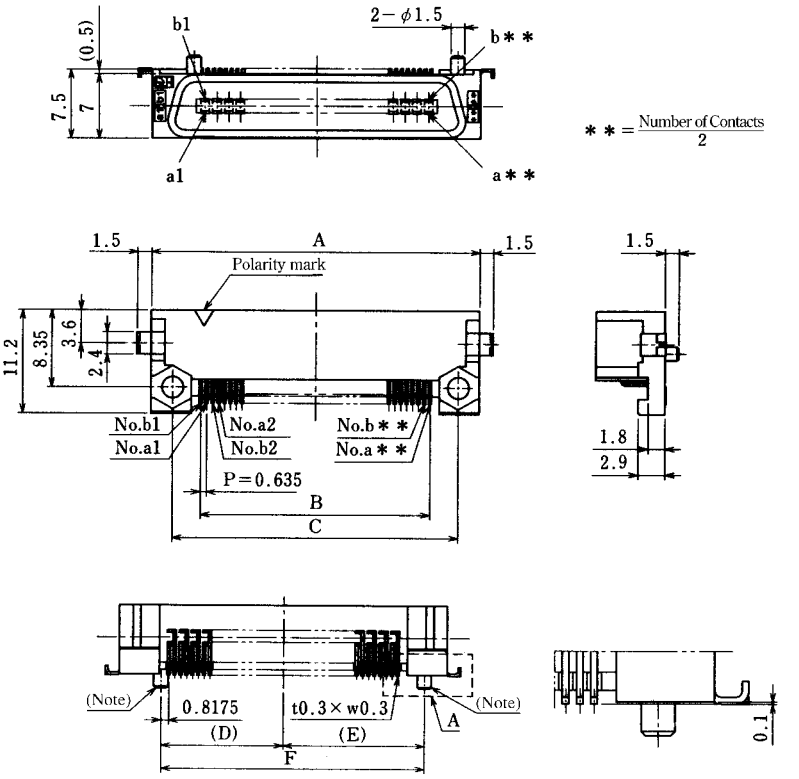


Note : The FX2A type does not have bosses as shown in the illustration.

## ◆PCB mounting Pattern

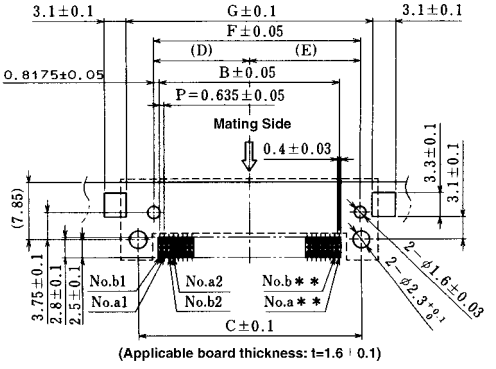


## ◆Recommended Screw Clamp

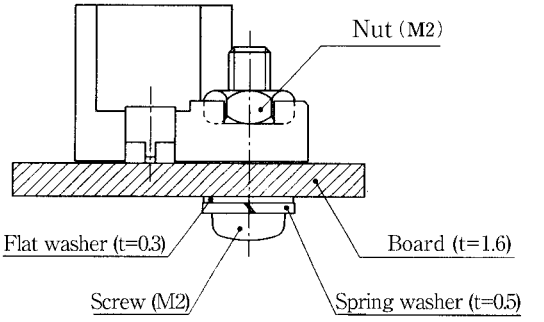


Use M2 screw for fixture.
Recommended torque is 0.15(N•m).

Unit : mm

| Part No. | HRS No. | No. of Contacts | A | B | C | D | E | F | G | RoHS |
|---|---|---|---|---|---|---|---|---|---|---|
| FX2-20P-0.635SH(71) | 572-2761-2 71 | 20 | 22.75 | 12.065 | 18.05 | 6.85 | 8.85 | 15.7 | 21.15 | YES |
| FX2A-20P-0.635SH(71) | 572-2771-6 71 | | | | | — | — | — | | |
| FX2-40P-0.635SH(71) | 572-2763-8 71 | 40 | 35.45 | 24.765 | 30.75 | 13.2 | 15.2 | 28.4 | 33.85 | |
| FX2A-40P-0.635SH(71) | 572-2773-1 71 | | | | | — | — | — | | |
| FX2-52P-0.635SH(71) | 572-2764-0 71 | 52 | 43.07 | 32.385 | 38.37 | 17.01 | 19.01 | 36.02 | 41.47 | |
| FX2A-52P-0.635SH(71) | 572-2774-4 71 | | | | | — | — | — | | |
| FX2-60P-0.635SH(71) | 572-2765-3 71 | 60 | 48.15 | 37.465 | 43.45 | 19.55 | 21.55 | 41.1 | 46.55 | |
| FX2A-60P-0.635SH(71) | 572-2775-7 71 | | | | | — | — | — | | |
| FX2-80P-0.635SH(71) | 572-2767-9 71 | 80 | 60.85 | 50.165 | 56.15 | 25.9 | 27.9 | 53.8 | 59.25 | |
| FX2A-80P-0.635SH(71) | 572-2777-2 71 | | | | | — | — | — | | |

Dec.1.2025 Copyright 2025 HIROSE ELECTRIC CO., LTD. All Rights Reserved.



Downloaded from Arrow.com.

# ■Socket Type

## ●Lock Cable Type

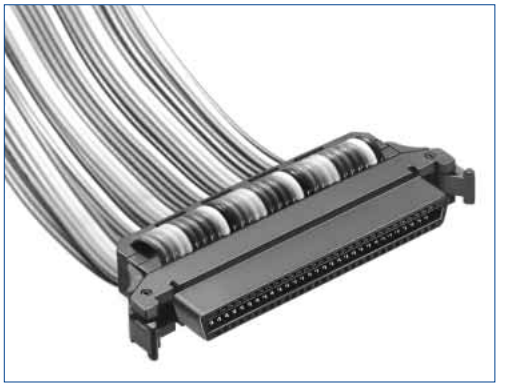

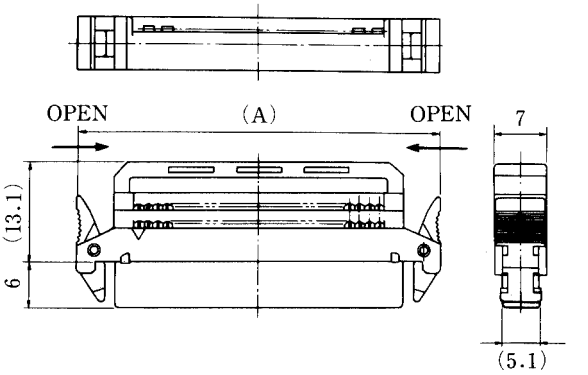


Combination View

Unit : mm

| Part No. | HRS No. | No. of Contacts | A | RoHS |
|---|---|---|---|---|
| FX2B- 20SA-1.27R | 572-0621-2 | 20 | 27.83 | YES |
| FX2B- 32SA-1.27R | 572-0622-5 | 32 | 35.45 | |
| FX2B- 40SA-1.27R | 572-0623-8 | 40 | 40.53 | |
| FX2B- 52SA-1.27R | 572-0624-0 | 52 | 48.15 | |
| FX2B- 60SA-1.27R | 572-0625-3 | 60 | 53.23 | |
| FX2B- 68SA-1.27R | 572-0629-4 | 68 | 58.31 | |
| FX2B- 80SA-1.27R | 572-0630-3 | 80 | 65.93 | |
| FX2B-100SA-1.27R | 572-0628-1 | 100 | 78.63 | |

## ●Unlock Cable Type

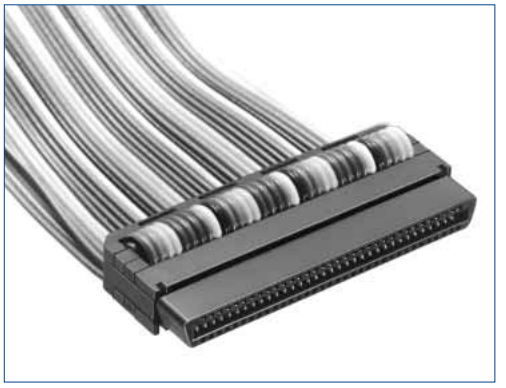

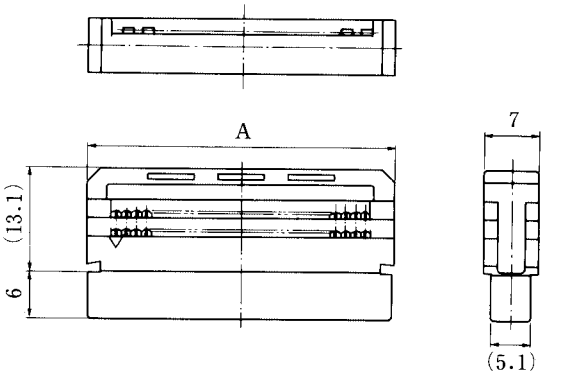


Combination View

Unit : mm

| Part No. | HRS No. | No. of Contacts | A | RoHS |
|---|---|---|---|---|
| FX2BA- 20SA-1.27R | 572-0671-0 | 20 | 18.05 | YES |
| FX2BA- 32SA-1.27R | 572-0672-3 | 32 | 25.67 | |
| FX2BA- 40SA-1.27R | 572-0673-6 | 40 | 30.75 | |
| FX2BA- 52SA-1.27R | 572-0674-9 | 52 | 38.37 | |
| FX2BA- 60SA-1.27R | 572-0675-1 | 60 | 43.45 | |
| FX2BA- 68SA-1.27R | 572-0676-4 | 68 | 48.53 | |
| FX2BA- 80SA-1.27R | 572-0677-7 | 80 | 56.15 | |
| FX2BA-100SA-1.27R | 572-0678-0 | 100 | 68.85 | |

# ◆Connection Tool

| Type | Part No. | HRS No. |
|---|---|---|
| Guide plate | FX2B(A)-GPA | 550-0212-6 |
| Connection press | Hi-Flex connection press | 550-0082-2 |

Note : HRS6 cable cutter FC601 isn't required for FX2B(A) connection.
(Connected without convex-concave cutting.)

Dec.1.2025 Copyright 2025 HIROSE ELECTRIC CO., LTD. All Rights Reserved.



Downloaded from Arrow.com.

# ■Header

## ●Right Angle Type for Lock

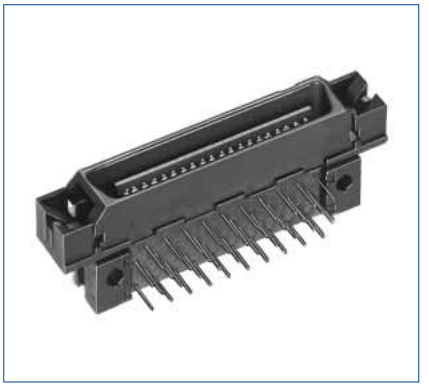

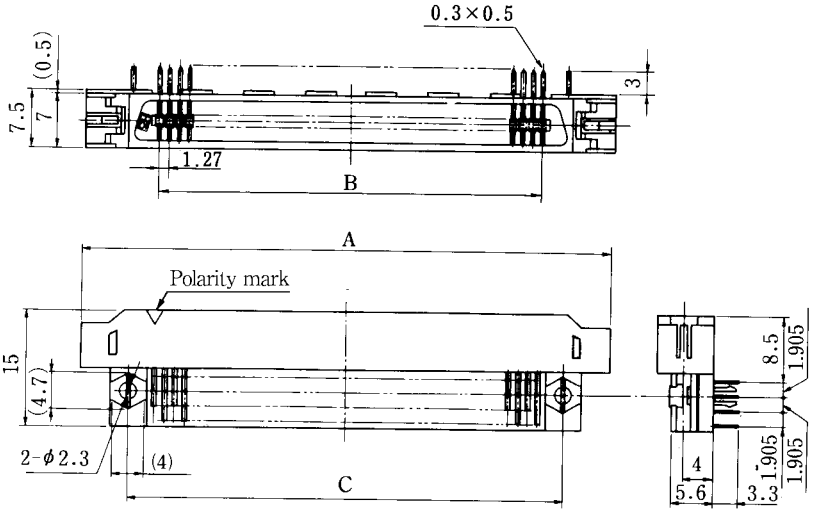


## ◆PCB mounting pattern

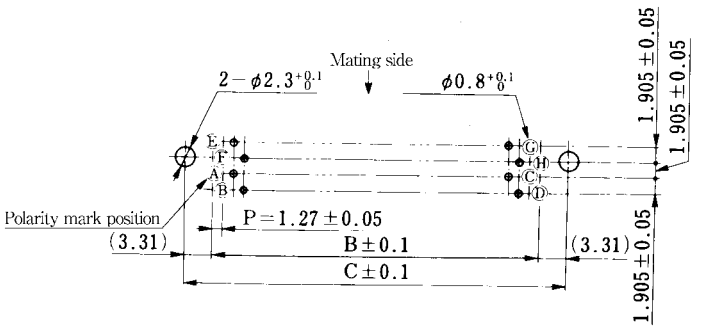


n= number of contacts

| | |
|---|---|
| Ⓐ a1 | Ⓔ b1 |
| Ⓑ a2 | Ⓕ b2 |
| Ⓒ $a\frac{n}{2}-1$ | Ⓖ $b\frac{n}{2}-1$ |
| Ⓓ $a\frac{n}{2}$ | Ⓗ $b\frac{n}{2}$ |

Unit : mm

| Part No. | HRS No. | No. of Contacts | A | B | C | RoHS |
|---|---|---|---|---|---|---|
| FX2B- 20PA-1.27DS(71) | 572-0721-7 71 | 20 | 30.33 | 11.43 | 18.05 | YES |
| FX2B- 20PA-1.27DSL(71) | 572-0771-5 71 | | | | | |
| FX2B- 32PA-1.27DS(71) | 572-0722-0 71 | 32 | 37.95 | 19.05 | 25.67 | |
| FX2B- 32PA-1.27DSL(71) | 572-0772-8 71 | | | | | |
| FX2B- 40PA-1.27DS(71) | 572-0723-2 71 | 40 | 43.03 | 24.13 | 30.75 | |
| FX2B- 40PA-1.27DSL(71) | 572-0773-0 71 | | | | | |
| FX2B- 52PA-1.27DS(71) | 572-0724-5 71 | 52 | 50.65 | 31.75 | 38.37 | |
| FX2B- 52PA-1.27DSL(71) | 572-0774-3 71 | | | | | |
| FX2B- 60PA-1.27DS(71) | 572-0725-8 71 | 60 | 55.73 | 36.83 | 43.45 | |
| FX2B- 60PA-1.27DSL(71) | 572-0775-6 71 | | | | | |
| FX2B- 68PA-1.27DS(71) | 572-0726-0 71 | 68 | 60.81 | 41.91 | 48.53 | |
| FX2B- 68PA-1.27DSL(71) | 572-0776-9 71 | | | | | |
| FX2B- 80PA-1.27DS(71) | 572-0727-3 71 | 80 | 68.43 | 49.53 | 56.15 | |
| FX2B- 80PA-1.27DSL(71) | 572-0777-1 71 | | | | | |
| FX2B-100PA-1.27DS(71) | 572-0728-6 71 | 100 | 81.13 | 62.23 | 68.85 | |
| FX2B-100PA-1.27DSL(71) | 572-0778-4 71 | | | | | |

Dec.1.2025 Copyright 2025 HIROSE ELECTRIC CO., LTD. All Rights Reserved.



Downloaded from Arrow.com.

# ■Header No Cleaning Type

## ●Straight Type for Lock

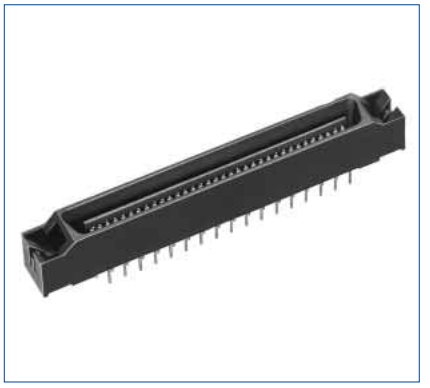

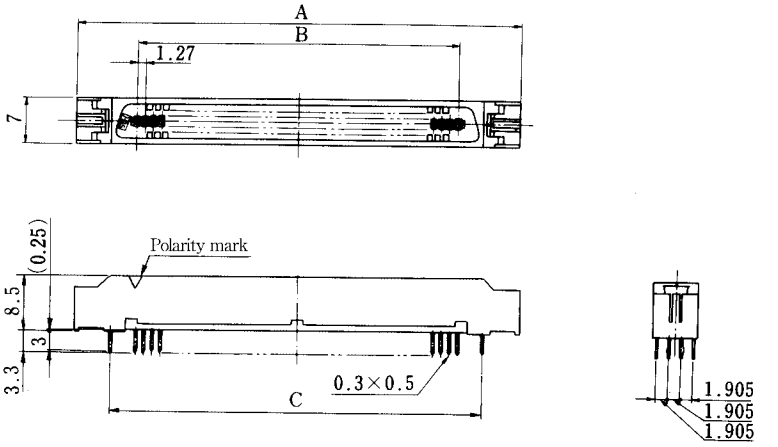


## ◆PCB mounting pattern

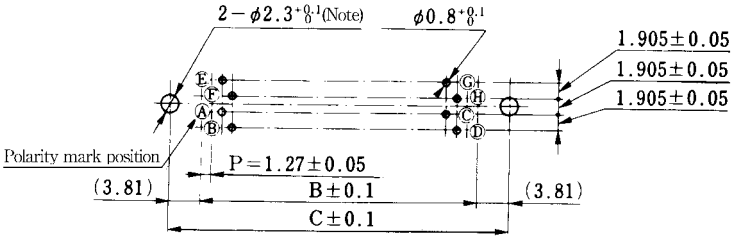


Note: Not required, unless the prefixed pin is attached.

n = number of contact

| | |
|---|---|
| Ⓐ a1 | Ⓔ b1 |
| Ⓑ a2 | Ⓕ b2 |
| Ⓒ $a\frac{n}{2}-1$ | Ⓖ $b\frac{n}{2}-1$ |
| Ⓓ $a\frac{n}{2}$ | Ⓗ $b\frac{n}{2}$ |

Unit : mm

| Part No. | HRS No. | No. of Contacts | A | B | C | RoHS |
|---|---|---|---|---|---|---|
| FX2B- 20P-1.27DSA(71) | 572-0801-4 71 | 20 | 30.33 | 11.43 | — | YES |
| FX2B- 20P-1.27DSAL(71) | 572-0851-2 71 | | | | 19.05 | |
| FX2B- 32P-1.27DSA(71) | 572-0802-7 71 | 32 | 37.95 | 19.05 | — | |
| FX2B- 32P-1.27DSAL(71) | 572-0852-5 71 | | | | 26.67 | |
| FX2B- 40PA-1.27DSA(71) | 572-0823-7 71 | 40 | 43.03 | 24.13 | — | |
| FX2B- 40PA-1.27DSAL(71) | 572-0873-5 71 | | | | 31.75 | |
| FX2B- 52PA-1.27DSA(71) | 572-0824-0 71 | 52 | 50.65 | 31.75 | — | |
| FX2B- 52PA-1.27DSAL(71) | 572-0874-8 71 | | | | 39.37 | |
| FX2B- 60PA-1.27DSA(71) | 572-0825-2 71 | 60 | 55.73 | 36.83 | — | |
| FX2B- 60PA-1.27DSAL(71) | 572-0875-0 71 | | | | 44.45 | |
| FX2B- 68PA-1.27DSA(71) | 572-0826-5 71 | 68 | 60.81 | 41.91 | — | |
| FX2B- 68PA-1.27DSAL(71) | 572-0876-3 71 | | | | 49.53 | |
| FX2B- 80PA-1.27DSA(71) | 572-0827-8 71 | 80 | 68.43 | 49.53 | — | |
| FX2B- 80PA-1.27DSAL(71) | 572-0877-6 71 | | | | 57.15 | |
| FX2B-100PA-1.27DSA(71) | 572-0828-0 71 | 100 | 81.13 | 62.23 | — | |
| FX2B-100PA-1.27DSAL(71) | 572-0878-9 71 | | | | 69.85 | |

Dec.1.2025 Copyright 2025 HIROSE ELECTRIC CO., LTD. All Rights Reserved.



Downloaded from Arrow.com.

# ■Header Cleaning Type

## ●Straight Type for Lock

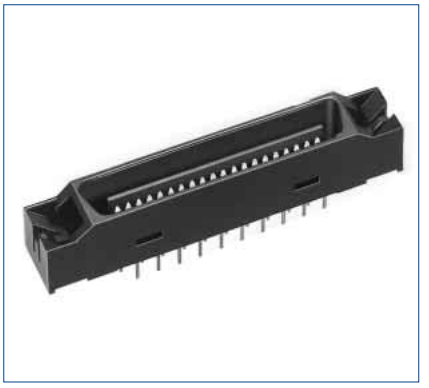

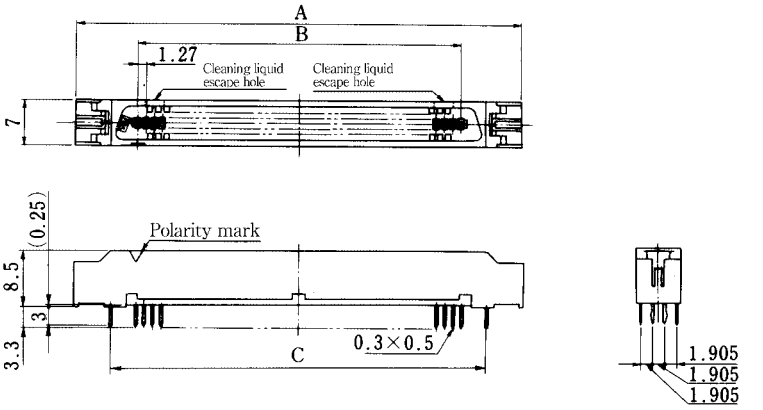


## ◆PCB mounting pattern

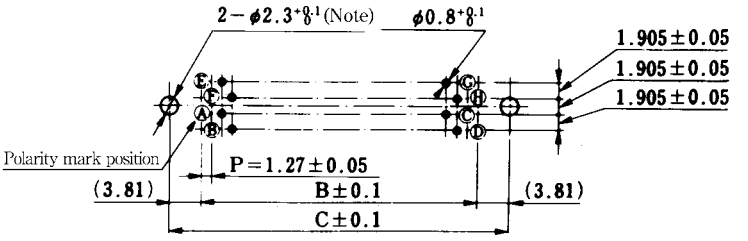


Note: Not required, unless the prefixed pin is attached

n= number of contacts

Ⓐ a1 Ⓔ b1
Ⓑ a2 Ⓕ b2
Ⓒ $a\frac{n}{2}-1$ Ⓖ $b\frac{n}{2}-1$
Ⓓ $a\frac{n}{2}$ Ⓗ $b\frac{n}{2}$

Unit : mm

| Part No. | HRS No. | No. of Contacts | A | B | C | RoHS |
|---|---|---|---|---|---|---|
| FX2BA- 20P-1.27DSA(71) | 572-0901-9 71 | 20 | 30.33 | 11.43 | — | YES |
| FX2BA- 20P-1.27DSAL(71) | 572-0951-7 71 | | | | 19.05 | |
| FX2BA- 32P-1.27DSA(71) | 572-0902-1 71 | 32 | 37.95 | 19.05 | — | |
| FX2BA- 32P-1.27DSAL(71) | 572-0952-0 71 | | | | 26.67 | |
| FX2BA- 40PA-1.27DSA(71) | 572-0923-1 71 | 40 | 43.03 | 24.13 | — | |
| FX2BA- 40PA-1.27DSAL(71) | 572-0973-0 71 | | | | 31.75 | |
| FX2BA- 52PA-1.27DSA(71) | 572-0924-4 71 | 52 | 50.65 | 31.75 | — | |
| FX2BA- 52PA-1.27DSAL(71) | 572-0974-2 71 | | | | 39.37 | |
| FX2BA- 60PA-1.27DSA(71) | 572-0925-7 71 | 60 | 55.73 | 36.83 | — | |
| FX2BA- 60PA-1.27DSAL(71) | 572-0975-5 71 | | | | 44.45 | |
| FX2BA- 68PA-1.27DSA(71) | 572-0926-0 71 | 68 | 60.81 | 41.91 | — | |
| FX2BA- 68PA-1.27DSAL(71) | 572-0976-8 71 | | | | 49.53 | |
| FX2BA- 80PA-1.27DSA(71) | 572-0927-2 71 | 80 | 68.43 | 49.53 | — | |
| FX2BA- 80PA-1.27DSAL(71) | 572-0977-0 71 | | | | 57.15 | |
| FX2BA-100PA-1.27DSA(71) | 572-0928-5 71 | 100 | 81.13 | 62.23 | — | |
| FX2BA-100PA-1.27DSAL(71) | 572-0978-3 71 | | | | 69.85 | |

Dec.1.2025 Copyright 2025 HIROSE ELECTRIC CO., LTD. All Rights Reserved.



Downloaded from Arrow.com.

# FX2M6 Series

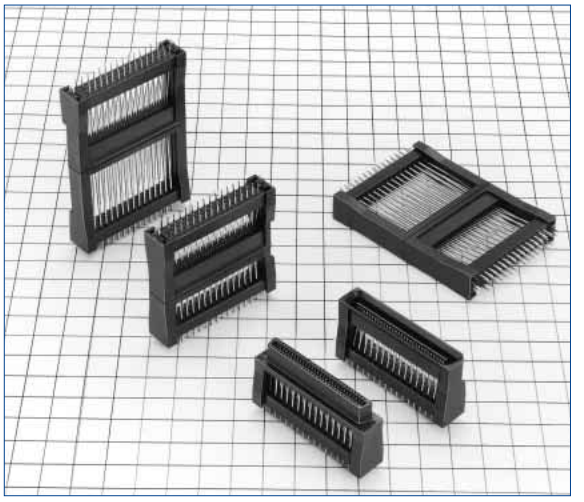

## ■Ordering Imformation

**FX2M6 A - 60 P - 1.27 DSA L**

❶ ❷ ❸ ❹ ❺ ❻ ❼

| | |
|---|---|
| ❶ Series Name | : FX2M6 |
| ❷ Type No. | : A |
| ❸ Number of contacts | : 60 |
| ❹ Contact Style<br>P : Header<br>S : Receptacle | |
| ❺ Contact pitch | : 1.27mm |
| ❻ DSA | : Straight type |
| ❼ L | : Board prefixed pin |

## ◆Stacking Variation

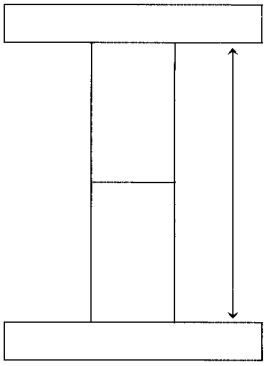

Unit : mm

| Header \ Receptacle | FX2C-60S -1.27DSA | FX2C2-60S -1.27DSA | FX2M6B-60S -1.27DSAL |
|---|---|---|---|
| FX2C-60P -1.27DSA | 12 | 14 | 28.2 ∗2 |
| FX2C1-60P -1.27DSA | 13 | 15 | 29.2 ∗2 |
| FX2C2-60P -1.27DSA | 14 | 16 | 30.2 ∗2 |
| FX2M6B-60P -1.27DSAL | 28.4 ∗1 | 30.4 ∗1 | 44 |
| FX2M6A-60P -1.27DSAL | 34.4 ∗1 | 36.4 ∗1 | 50 |

Note 1. Mate the male and female connectors to meet the allowable clearance within 1.0mm. However, set it within 0.4mm in combination ∗1. In case of combination ∗2, use as 1.6mm or less.

Note 2. In case of combination ∗2, 0.6mm clearance occurs on the mating side, but no problem.

Note 3. After the board is mounted, fix the board by screws.

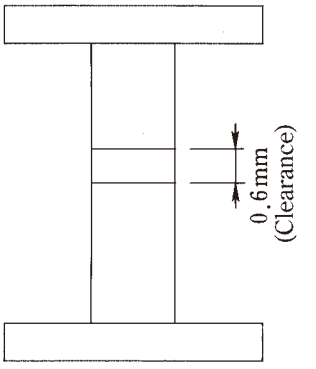


Dec.1.2025 Copyright 2025 HIROSE ELECTRIC CO., LTD. All Rights Reserved.



Downloaded from Arrow.com.

## ■Header

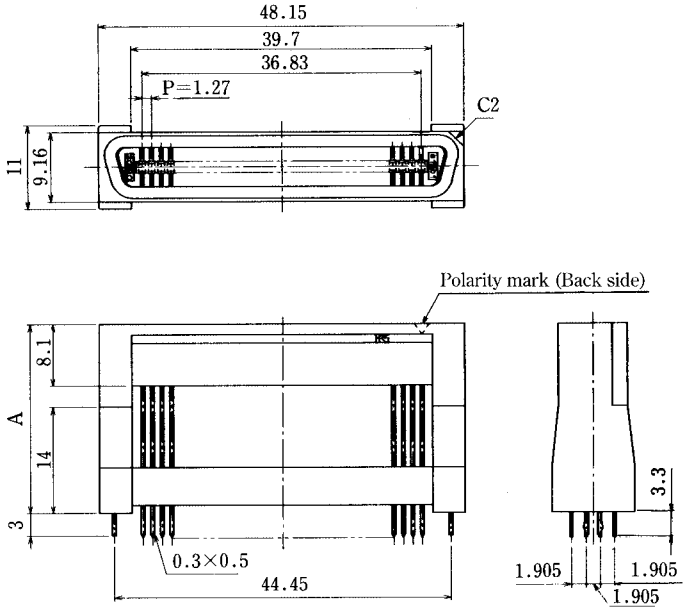


## ◆PCB mounting pattern

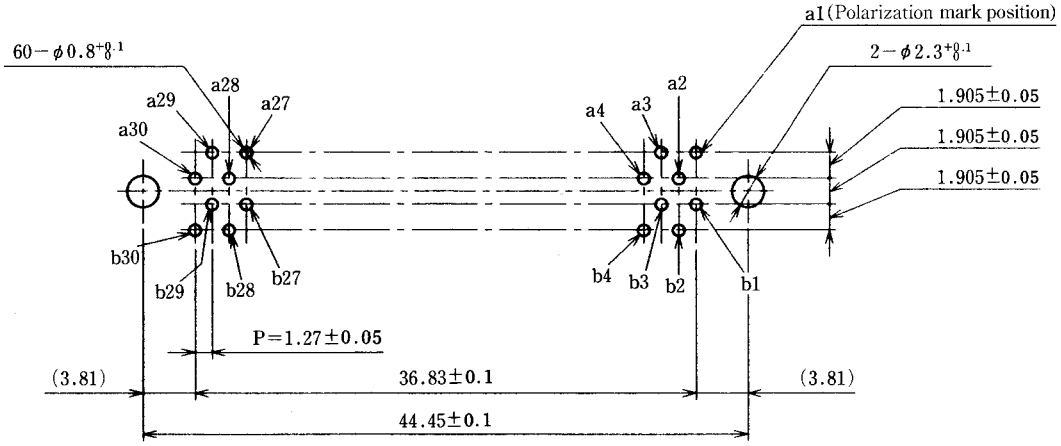


Applicable board thickness t = 1.6

Unit : mm

| Part No. | HRS No. | A | RoHS |
|---|---|---|---|
| FX2M6A-60P-1.27DSAL(71) | 572-1036-8 71 | 30.9 | YES |
| FX2M6B-60P-1.27DSAL(71) | 572-1041-8 71 | 24.9 | |

Dec.1.2025 Copyright 2025 HIROSE ELECTRIC CO., LTD. All Rights Reserved.



Downloaded from Arrow.com.

## ■Receptacle

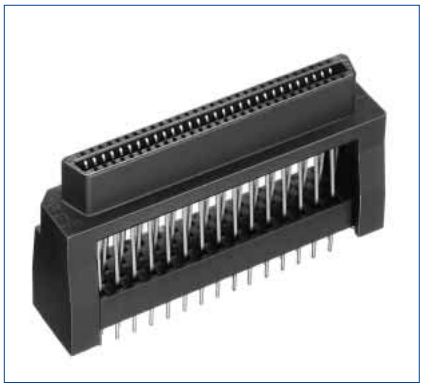

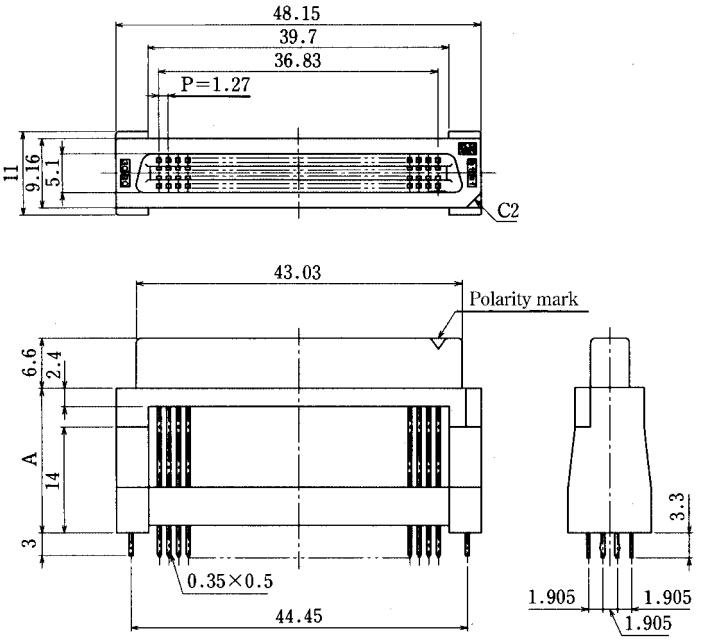


## ◆PCB mounting pattern

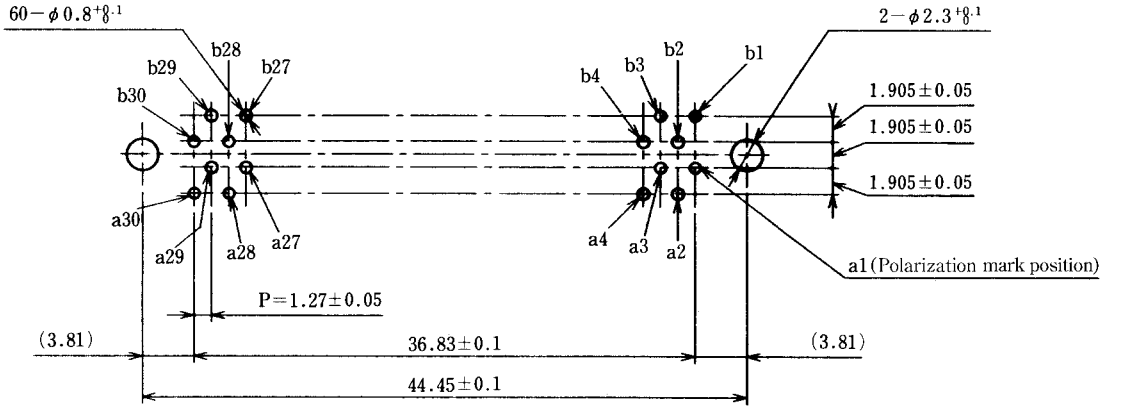


Applicable board thickness t = 1.6

Unit : mm

| Part No. | HRS No. | A | RoHS |
|---|---|---|---|
| FX2M6B-60S-1.27DSAL(71) | 572-1042-0 71 | 19.1 | YES |

Dec.1.2025 Copyright 2025 HIROSE ELECTRIC CO., LTD. All Rights Reserved.



Downloaded from Arrow.com.

## ◆Connection Circuit Diagram

$$n = \frac{\text{Number of Contacts}}{2}$$

### Type A, B

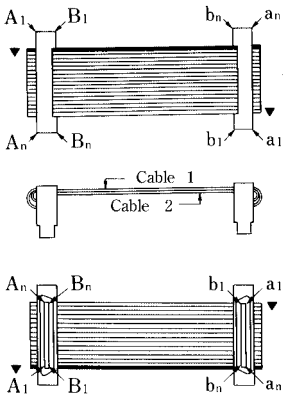


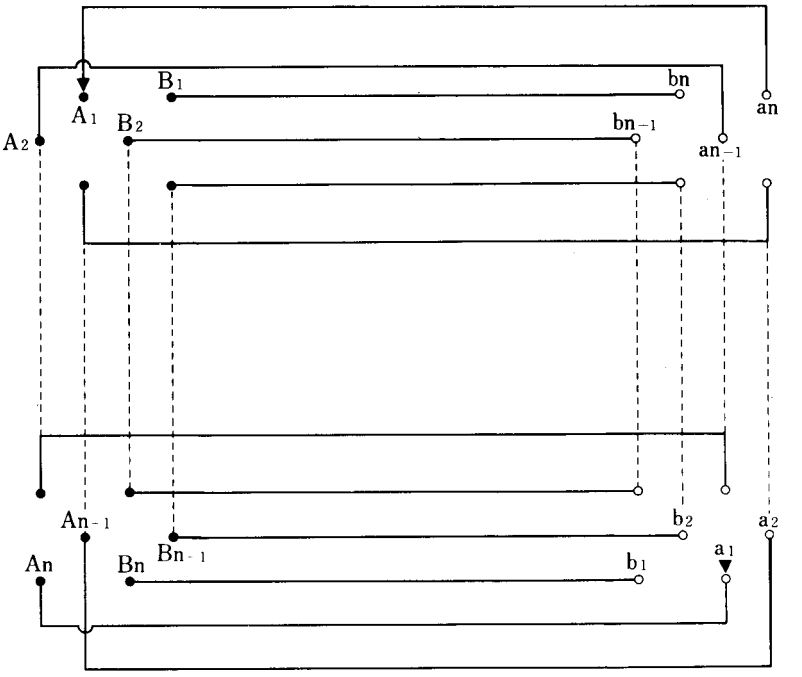


| Connection to Cable 1 | Connection to Cable 2 |
|---|---|
| A1 — an | B1 — bn |
| A2 — an−1 | B2 — bn−1 |
| ⋮ | ⋮ |
| An — a1 | Bn — b1 |

### Type A, A

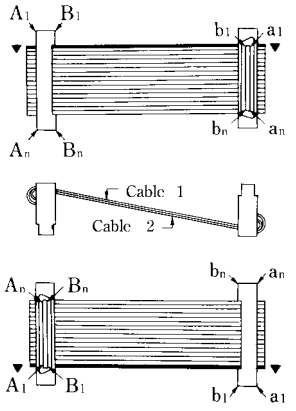


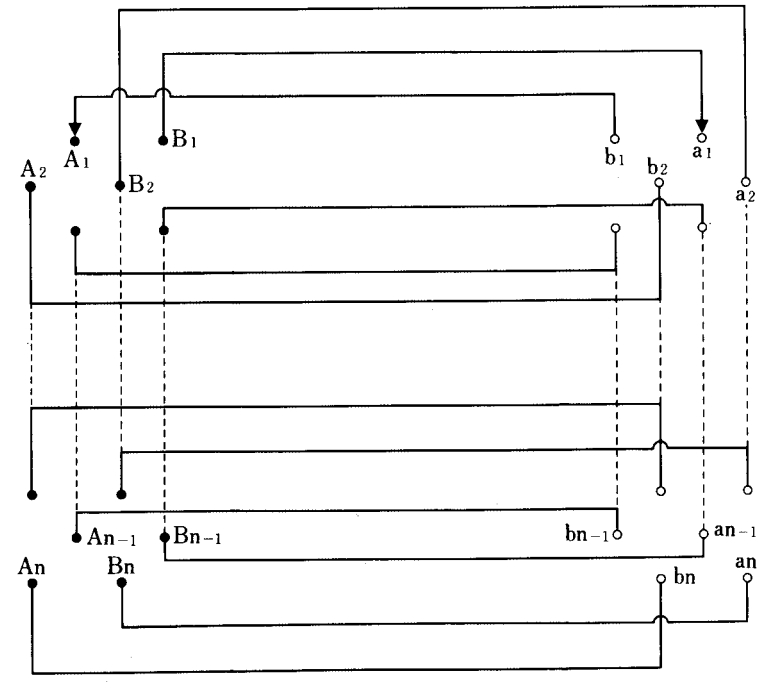


| Connection to Cable 1 | Connection to Cable 2 |
|---|---|
| A1 — b1 | B1 — a1 |
| A2 — b2 | B2 — a2 |
| ⋮ | ⋮ |
| An — bn | Bn — an |

Dec.1.2025 Copyright 2025 HIROSE ELECTRIC CO., LTD. All Rights Reserved.



Downloaded from Arrow.com.

# ◆Connecter Use Hand book

## 1. Selecting connector

① The FX2 series is the perfect flux tight connector for the straight type in the soldering process, but it depends on the soldering process whether non-cleaning type (FX2C-✻, FX2B-✻) or cleaning type (FX2CA-✻, FX2BA-✻) should be selected. Please be sure to clean the right angle type (FX2-✻, FX2B-✻) connector. To clean the connector, please be sure to use detergent, containing no contaminant.

② To use the socket cable type, if a vibration or shock load is applied to the cable, select the lock type. In addition, if a load is applied to the cable, please be sure to use the cable clamp.

## 2. Prefixed Process to Board

If the prefixed process is required for mounting the board, please use the prefixed pin type. (Applicable board thickness t = 1.6±0.1)

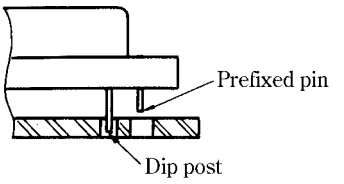


Note : In order to prevent the dip post breakage in the connector installation to the board, please insert the board in parallel to the connector so that the prefixed pin may be forcibly pushed in, after the dip post is guided to the board through-hole.

## 3. Mating Side Tolerance Clearance

(Example) FX2C-✻P-1.27DSA and FX2C-✻S-1.27DSA

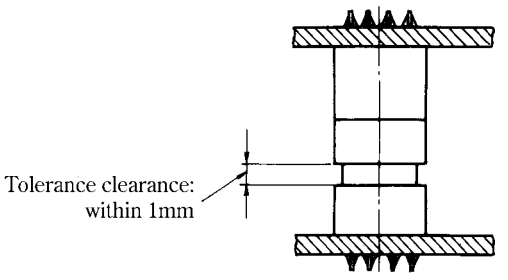


Set the tolerance clearance within 1mm to mate the male and female connectors.
(Except for the lock cable type)

## 4. Cautions: for Using Lock Cable Type

① When the connector is mated, insert the connector by the end so as not to make a clearance.

② When the connector is inserted or extracted, please insert or extract the connector after the both lock levers are laid inside. If the connector is inserted or extracted with either lock lever laid, the connector may be broken.

③ please do not open the lock lever outside.

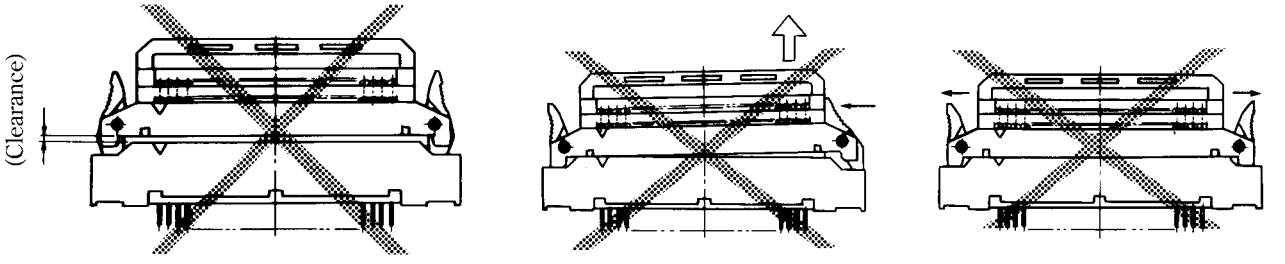


Dec.1.2025 Copyright 2025 HIROSE ELECTRIC CO., LTD. All Rights Reserved.



Downloaded from Arrow.com.

## 5. SMT Type Connector Mounting Temperature Profile (Reference)

●IR Reflow

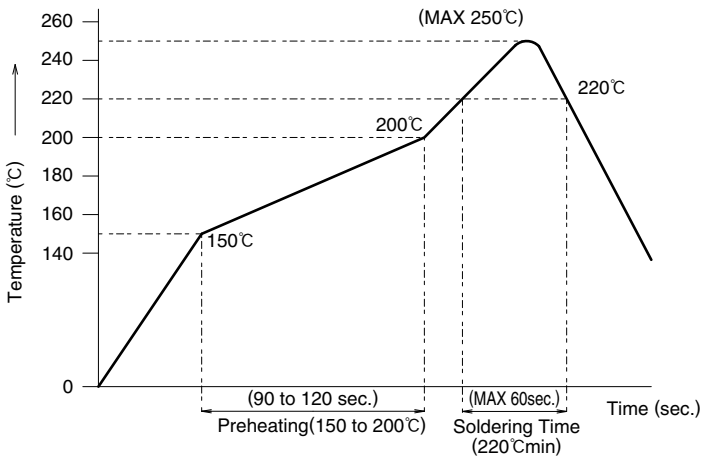


**HRS test conditions**

Test boardGlass epoxy 110mm×40mm×1.6mm thick

Solder method : Reflow

Solder composition : Paste,
96.5%Sn/ 3%Ag/ 0.5%Cu

Metal mask : 0.2mm thick (Straight)
0.15mm thick(Right angle)

Reflow cycles : 2 cycles

The temperature profile is based on the above conditions.
In individual applications the actual temperature may vary, depending on solder paste type, volume/thickness and board size/thickness. Consult your solder paste and equipment manufacturer for specific recommendations.

＊In regard to the straight type, please contact Hirose Electric about the recommended open area ratio when using a 0.15mm metal mask.

## 6. SMT Type Connector mated height

As shown in the application pattern, the mated height of the male/female connector doesn't contain the solder paste thickness. Thus, after the connector installation in the board, consider that the mated height will be widened in proportion to the solder paste thickness.

Dec.1.2025 Copyright 2025 HIROSE ELECTRIC CO., LTD. All Rights Reserved.

HIROSE ELECTRIC CO.,LTD.
2-6-3,Nakagawa Chuoh,Tsuzuki-Ku,Yokohama-Shi 224-8540,JAPAN
https://www.hirose.com/



The characteristics and the specifications contained herein are for reference purpose. Please refer to the latest customer drawings prior to use.
The contents of this catalog are current as of date of 08/2023. Contents are subject to change without notice for the purpose of improvements.
Downloaded from Arrow.com.