SK11971

THIS DRAWING CONTAINS INFORMATION PROPRIETARY TO POSITRONIC AND IT'S SUBSIDIARIES. POSITRONIC BELIEVES THE DATA ON THIS DRAWING TO BE RELIABLE, SINCE THE TECHNICAL INFORMATION IS GIVEN FREE OF CHARGE, THE USER EMPLOYS SUCH INFORMATION AT HIS OWN DISCRETION AND RISK. POSITRONIC ASSUMES NO RESPONSIBILITY FOR RESULTS OBTAINED OR DAMAGES INCURRED FROM USE OF SUCH INFORMATION IN WHOLE OR IN PART.

DATE	REV	REVISION RECORD	APP	DR	CK
11-24-10	NC	ECO 33340	COLE	BS	COLE

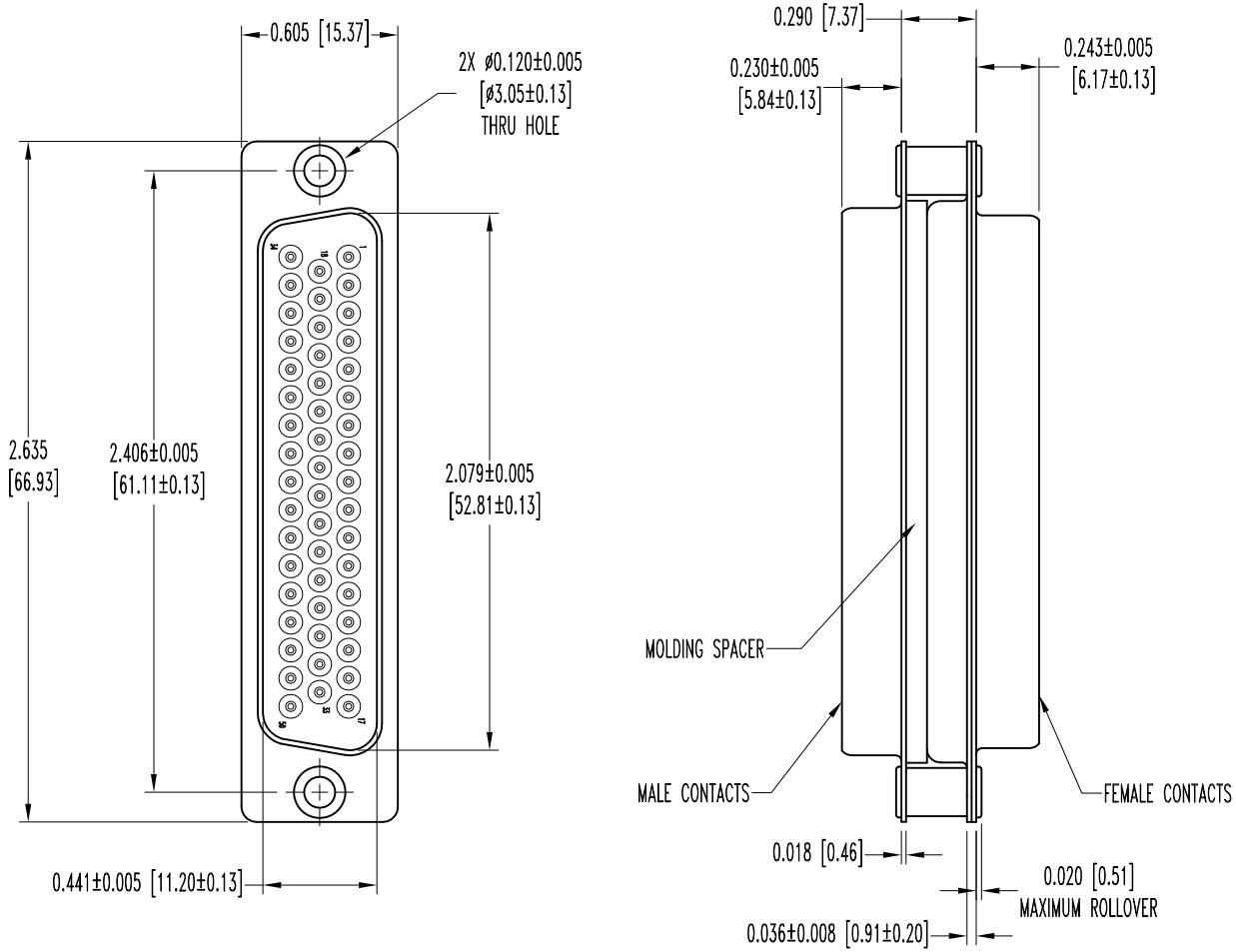

NOTES:

1. MATERIALS AND FINISHES:
   INSULATOR: GLASS FILLED DAP PER ASTM-D5948, UL 94V-0, ASTM E-595, NASA-RP-1124, COLOR: GREEN.
   CONTACTS: PRECISION MACHINED COPPER ALLOY, 0.000050 [1.27µ] GOLD OVER COPPER PLATE.
   SHELLS: BRASS, 0.000050 [1.27µ] GOLD OVER COPPER PLATE.
   MOLDING SPACER: GLASS FILLED POLYESTER, COLOR: BLUE.
2. DETAILED PRODUCT, MECHANICAL, AND ELECTRICAL INFORMATION IS AVAILABLE IN THE LATEST SPACE-D PRODUCT PUBLICATION. VISIT CONNECTPOSITRONIC.COM/PRODUCTS/62/HIGHPERFORMANCED-SUBMINIATURE OR CONNECTPOSITRONIC.COM.
3. DIMENSIONS ARE IN INCHES [MILLIMETERS].

POSITRONIC INDUSTRIES INC.
www.connectpositronic.com
FSCM 28198

DECIMAL TOL. ±0.015 [0.38]	SAD SERIES	SCALE N.T.S.	DRAWN BY B SHELLEDY
			APPROVED BY COLE
	TITLE SAD50S0GM0G		
ANGULAR TOL. ±5°	DATE 11-24-10	DRAWING NUMBER SK11971	REV. NC

Downloaded from Arrow.com.