SERIES: PSC150W | DESCRIPTION: DC-DC CONVERTER

FEATURES

- 150 W isolated output
- industry standard 1/4 brick package
- 12:1 input range (14~160 Vdc)
- over current, over temperature, over voltage, short circuit, and input UVLO protections
- remote on/off, output voltage trim, output remote voltage sense
- base plate cooling
- wide operating temperature range (-40 ~ 105°C)
- EN/IEC 62368 certified
- designed to meet EN 50155 and EN 45545-2 railway standards

MODEL

MODEL	input voltage range (Vdc)	output voltage (Vdc)	output current max (A)	output power max (W)	ripple and noise[1] max (mVp-p)	efficiency[2] typ (%)
PSC150W-110-S12	14~160	12	12.5	150	200	88.5
PSC150W-110-S24	14~160	24	6.25	150	240	87.5
PSC150W-110-S48	14~160	48	3.125	150	480	87.5
PSC150W-110-S54	14~160	54	2.778	150	540	87.5

Note:
1. Ripple and noise are measured at 20 MHz BW with 4.7μF*6 capacitor.
2. At nominal input and full load.
3. All specifications are measured at Ta=25°C, nominal input voltage and full output load unless otherwise specified.

PART NUMBER KEY

PSC150W - 110 - S XX

Base Number

Input Voltage

Output Voltage

Please read our datasheet & drawing disclaimer here.

Downloaded from Arrow.com.

INPUT

parameter	conditions/description	min	typ	max	units
operating input voltage		14	110	160	Vdc
no load input current				15	mA
surge voltage	0.1s max			200	Vdc
under voltage shutdown	0% ~ 100% load		12		Vdc
capacitance filter	Pi filter				
remote on/off	models ON: (Pin open or 3V < Vr < 12V) models OFF: (Short or 0V < Vr < 1.2V)				
capacitance filter	Pi filter				

OUTPUT

parameter	conditions/description	min	typ	max	units
maximum capacitive load[4]	12 Vdc output models 24 Vdc output models 48 & 54 Vdc output models			5,000 2,000 1,000	µF µF µF
line regulation	measured from high line to low line		±0.2		%
load regulation	measured from 0% ~ 100% load		±0.5		%
start-up voltage	0% ~ 100% load			14	Vdc
start-up time	at 100% load, nominal Vin	100		300	ms
voltage accuracy			±1		%
switching frequency	at 100% load, Vin range		250		kHz
voltage adjustablity	0% ~ 100% load at Vin range Pout ≤ max rated power		±10		%
transient response	75 ~ 100% step load change		500		µs
temperature coefficient				±0.05	%/°C

Note: 4. The capacitive load is test by minimum input and constant resistive load.

PROTECTIONS

parameter	conditions/description	min	typ	max	units
over current protection	at 110 Vdc		150		%
over voltage protection	12 Vdc ouptut model, at 110 Vdc 24 Vdc ouptut model, at 110 Vdc 48 Vdc ouptut model, at 110 Vdc 54 Vdc ouptut model, over voltage 112~150% Vdc	13.4 26.9 53.8 60.5		18.0 36.0 72.0 81.0	Vdc Vdc Vdc Vdc
short circuit protection	auto recovery, continuous				
over temperature protection	case temperature			115	°C

SAFETY AND COMPLIANCE

parameter	conditions/description	min	typ	max	units
isolation voltage	input to output, for 1 minute, 5 mA max	3,000			Vac
	input or output to case (base plate), for 1 minute, 5 mA max	1,500			Vac
isolation capacitance				3,000	pF
safety approvals	certified to 62368: EN, IEC				
EMI[5]	EN50121-3-2/ EN55032 Class A/B				
ESD	EN 61000-4-2, air ±8kV, contact ±6kV, Criteria A				
radiated immunity	EN 61000-4-3, 10V/m, Criteria A				
conducted immuninty	EN 61000-4-6, 10Vrms, Criteria A				
fast transient[6]	EN 61000-4-4, ±2kV, perf. criteria A				

Downloaded from Arrow.com.

SAFETY AND COMPLIANCE

parameter	conditions/description	min	typ	max	units
surge[6]	EN61000-4-5, ±2kV, perf. criteria A				
magnetic field immunity	EN 61000-4-8, 10 A/m, perf. criteria A				
MTBF	at 25°C	185,000			hours
RoHS	yes				

Note: 5. The EMI need external filter circuit for class A/B.
6. External input capacitor required 100μF/200V x3.

ENVIRONMENTAL

parameter	conditions/description	min	typ	max	units
operating temperature	baseplate temperature, see derating curve	-40		105	°C
storage temperature		-55		125	°C
humidity	non condensing	5		95	%
operating altitude				4,000	m
cooling method	natural convection				

RIPPLE AND NOISE

Figure 1

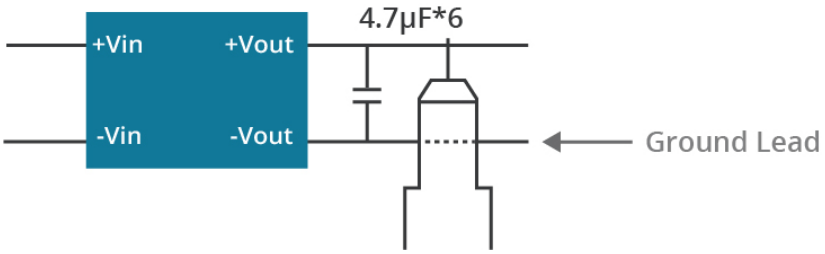

Note: Measured with 20MHz bandwidth and 4.7μF *6 ceramic capacitor.

HOLD UP TIME

Figure 2

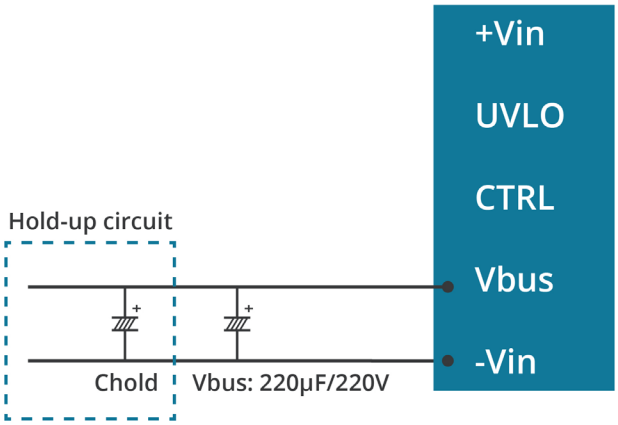

VBUS (+) VS INPUT VOLTAGE

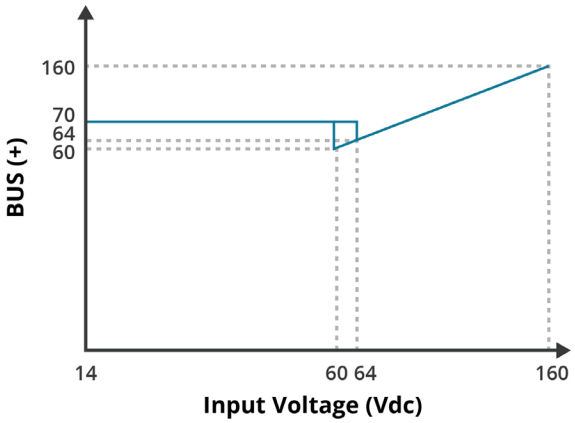

Table 1

Vin	24 V	36 V	48 V	72 V	96 V	110 V
10 ms	1,800 μF	1,800 μF	1,800 μF	1,800 μF	600 μF	500 μF
30 ms	4,800 μF	4,800 μF	4,800 μF	4,800 μF	1,800 μF	1,200 μF

Downloaded from Arrow.com.

UVLO EXTERNAL RESISTOR

Figure 3

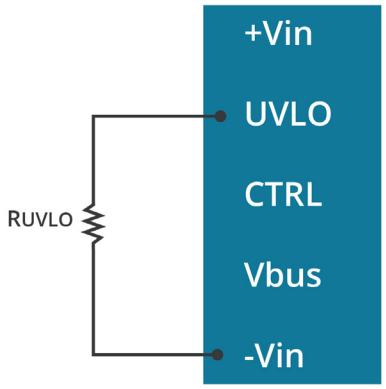

Table 2

UVLO External resistor RUVLO (Ω)	Open	125 K	62 K	27 K
Turn-off treshold	12 V	19.8 V	26.2 V	36.3 V
Turn-on treshold	13.8 V	22.2 V	28.7 V	39 V

RUVLO/VUVLO

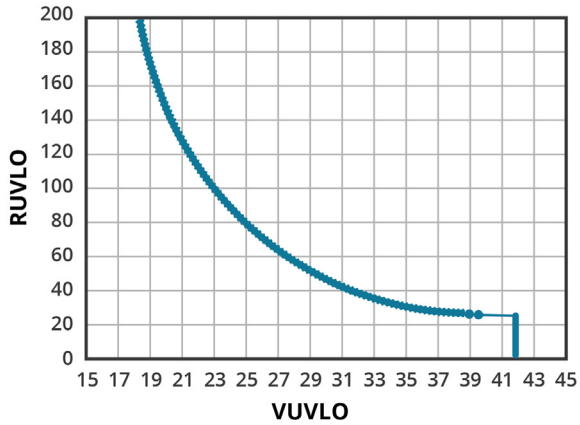

Note: The under voltage threshold can set by external resistor placed between the UVLO and -Vin.

EMC CLASS A RECOMMENDED CIRCUIT

Figure 4

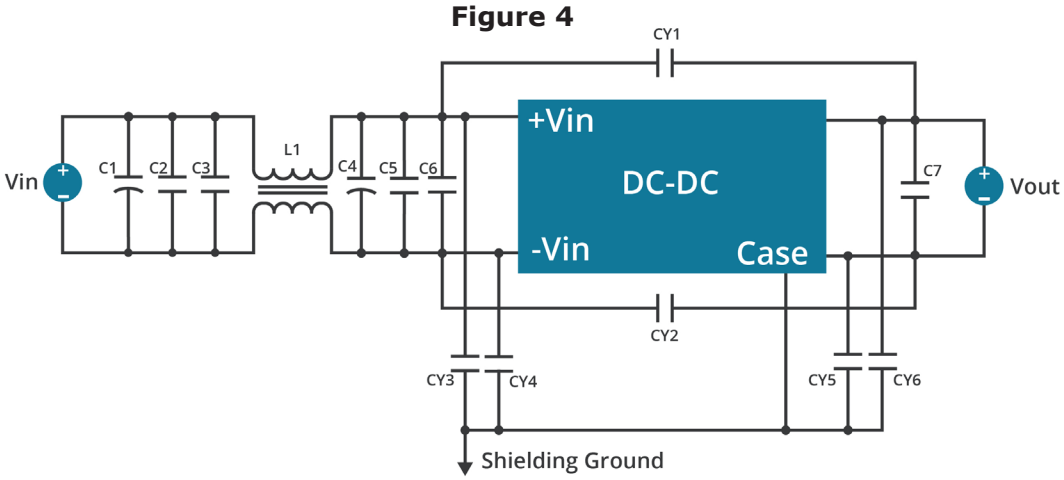

Table 3

Vout	C1, C4	C2, C3, C5, C6	C7	CY1, CY2	CY3, CY4, CY5, CY6	L1
12 V	100µF 200V Aluminum Cap	0.68µF 1210 250V Ceramic Cap	4.7µF 1210 100V x 6 parallel Ceramic Cap	1000pF 2211 5KV Ceramic Cap	1200pF 2211 3KV x 4 parallel Ceramic Cap	Commom Choke A10 2.0mH ±35%
24 V	220µF 200V Aluminum Cap	0.68µF 1210 250V Ceramic Cap	4.7µF 1210 100V x 6 Parallel Ceramic Cap	1000pF 2211 5KV Ceramic Cap	1200pF 2211 3KV x 4 parallel Ceramic Cap	Commom Choke A10 2.0mH ±35%
48 V 54 V	220µF 200V Aluminum Cap	0.68µF 1210 250V Ceramic Cap	4.7µF 1210 100V x 6 Parallel Ceramic Cap	1000pF 2211 5KV Ceramic Cap	1200pF 2211 3KV x 5 parallel Ceramic Cap	Commom Choke A10 2.0mH ±35%

Downloaded from Arrow.com.

EMC CLASS B RECOMMENDED CIRCUIT

Figure 5

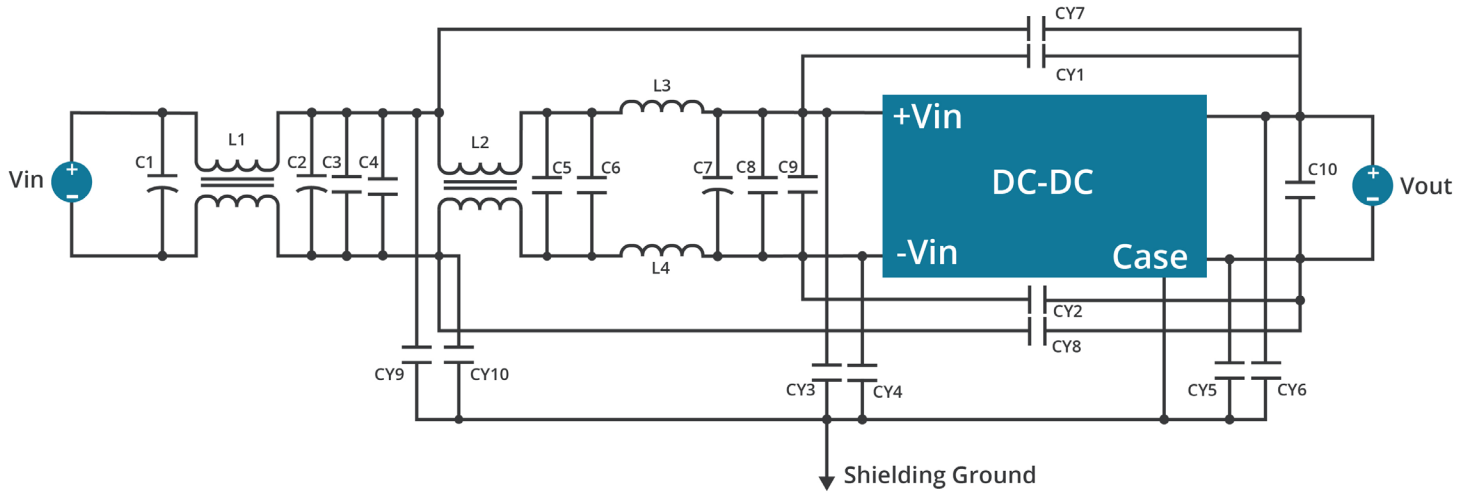

Table 4

Vout	C1, C2, C7	C3, C4, C5, C6, C8, C9	C10	CY1	CY2	CY3, CY4, CY5, CY6	CY7, CY8	CY9, CY10	L1, L2	L3, L4
12 V	100µF 200V Aluminum Cap	0.68µF 1210 250V Ceramic Cap	4.7µF 1210 100V x 6 parallel Ceramic Cap	2200pF 2211 5KV Ceramic Cap	1000pF 2211 5KV Ceramic Cap	2200pF 2211 3KV x 4 parallel Ceramic Cap	470pF 2211 5KV Ceramic Cap	-	Commom Choke A10 2.0mH ±35%	4.7µH
24 V 48 V 54 V	100µF 200V Aluminum Cap	0.68µF 1210 250V Ceramic Cap	4.7µF 1210 100V x 6 Parallel Ceramic Cap	2200pF 2211 5KV Ceramic Cap	1000pF 2211 5KV Ceramic Cap	2200pF 2211 3KV x 6 parallel Ceramic Cap	-	330pF 2211 3KV Ceramic Cap	Commom Choke A10 2.0mH ±35%	4.7µH

Downloaded from Arrow.com.

APPLICATION NOTES

Figure 6

Trim up

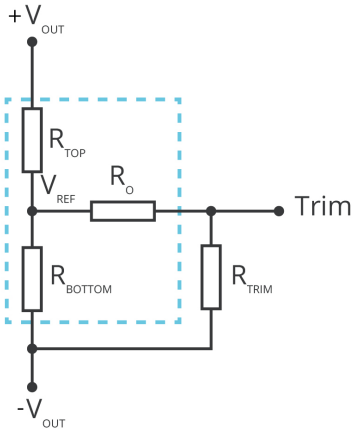

Trim down

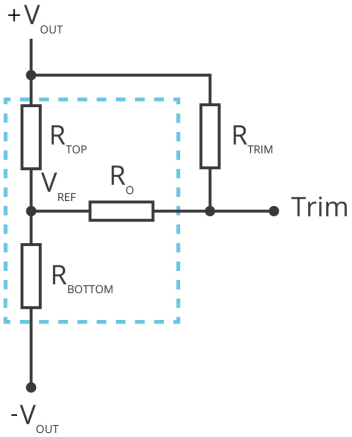

$$R_{TRIM} = \frac{a \cdot R_{BOTTOM}}{R_{BOTTOM} - a} - R_O \qquad a = \frac{V_{REF}}{V_{OUT} - V_{REF}} \cdot R_{TOP}$$

Formula for Trim up

$$R_{TRIM} = \frac{a \cdot R_{TOP}}{R_{TOP} - a} - R_O \qquad a = \frac{V_{OUT} - V_{REF}}{V_{REF}} \cdot R_{BOTTOM}$$

Formula for Trim down

Table 5

V_{OUT}	R_{TOP}	R_{BOTTOM}	R_O	V_{REF}
(Vdc)	(kΩ)	(kΩ)	(kΩ)	(V)
12	38	10	68	2.5
24	86	10	76.8	2.5
48	182	10	80.6	2.5
54	206.1	10	82	2.5

Note: Value for R_{TOP}, R_{BOTTOM}, R_O, and V_{REF} refer to Table 6 (fixed internal values).
R_{TRIM}: Trim resistance
a: User-defined parameter, no actual meanings
V_{OUT}: Target output voltage

Downloaded from Arrow.com.

MECHANICAL

parameter	conditions/description	min	typ	max	units
dimensions	57.9 x 36.8 x 12.7				mm
base plate material	aluminum base-plate with plastic case				
potting material	silicon				
weight			75		g

MECHANICAL DRAWING

units: mm
general tolerance: ±0.25 mm

PIN CONNECTIONS CN1 & CN2	
PIN	FUNCTION
1	+Vin
2	UVLO
3	CTRL
4	Vbus
5	-Vin
6	-Vout
7	-S
8	Trim
9	+S
10	+Vout

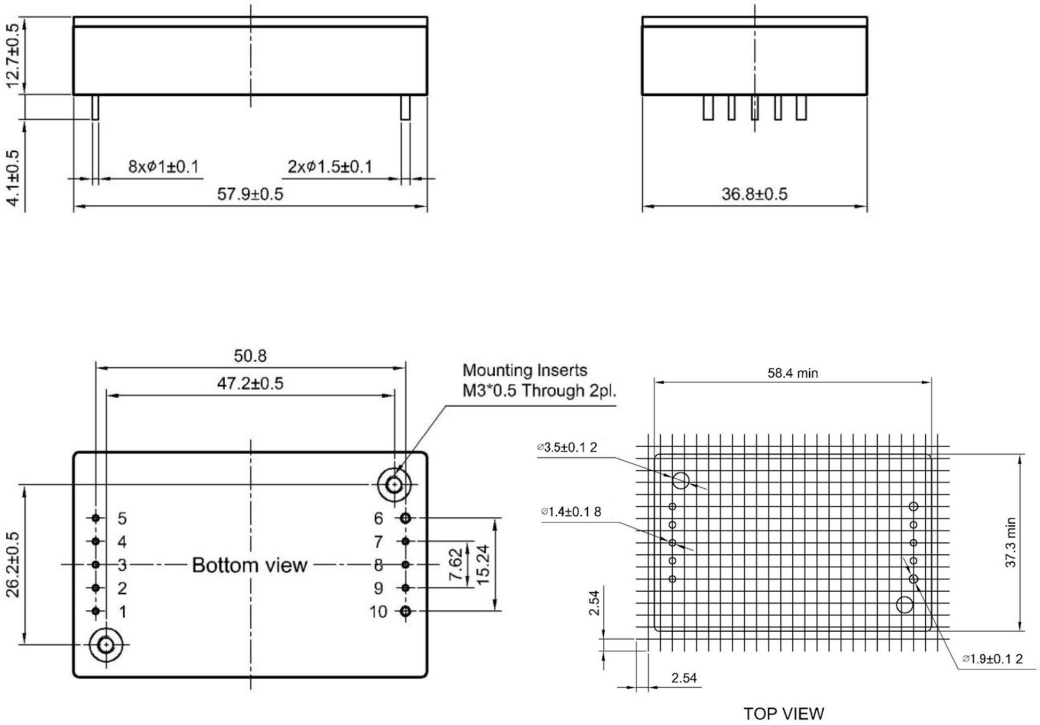

Downloaded from Arrow.com.

DERATING CURVES

TEMPERATURE DERATING CURVE
baseplate temperature

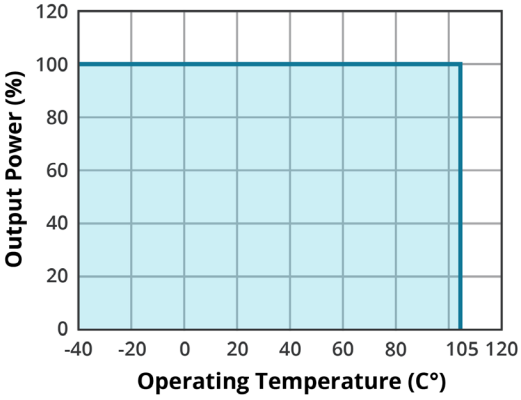

TEMPERATURE DERATING CURVE
without heatsink

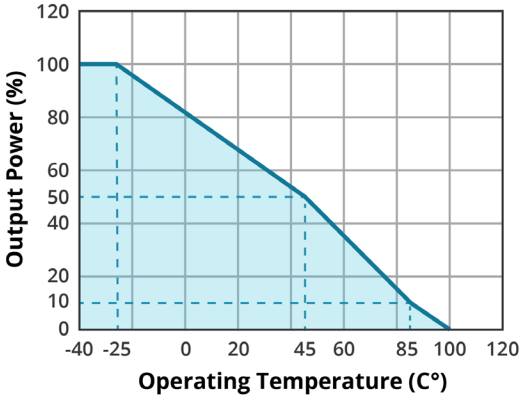

TEMPERATURE DERATING CURVE
PSC150W-110-S12
(at 110 Vin)

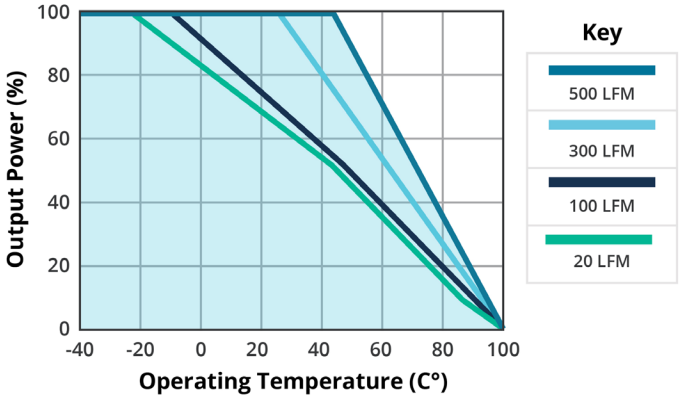

TEMPERATURE DERATING CURVE
PSC150W-110-S24
(at 110 Vin)

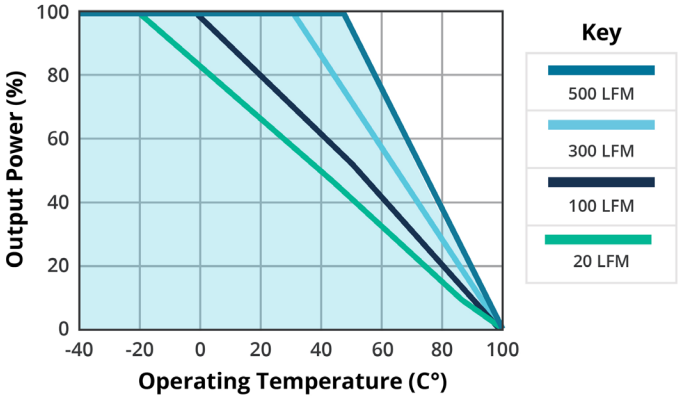

TEMPERATURE DERATING CURVE
PSC150W-110-S48
(at 110 Vin)

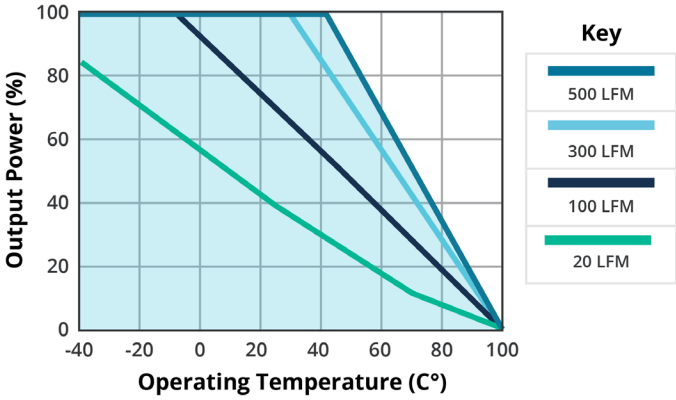

TEMPERATURE DERATING CURVE
PSC150W-110-S54
(at 110 Vin)

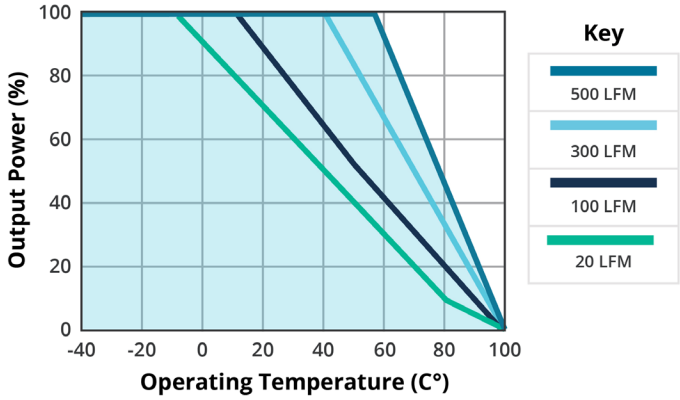

Downloaded from Arrow.com.

EFFICIENCY CURVES

EFFICIENCY VS OUTPUT LOAD
(at 25°C, Vin = 110V, Vo = 12V, Io = 12.5A)

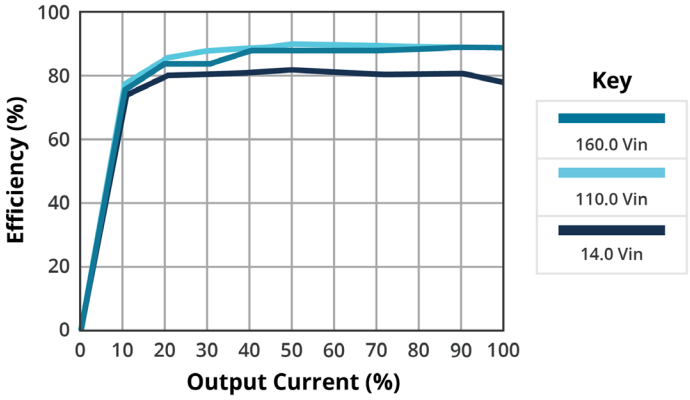

EFFICIENCY VS OUTPUT LOAD
(at 25°C, Vin = 110V, Vo = 24V, Io = 6.25A)

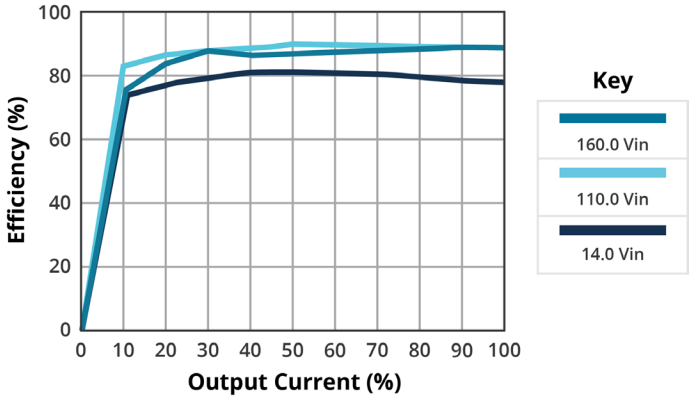

EFFICIENCY VS OUTPUT LOAD
(at 25°C, Vin = 110V, Vo = 48V, Io = 3.125A)

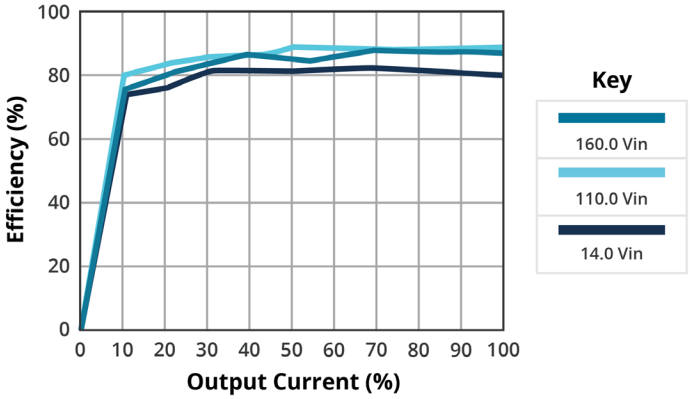

EFFICIENCY VS OUTPUT LOAD
(at 25°C, Vin = 110V, Vo = 54V, Io = 2.778A)

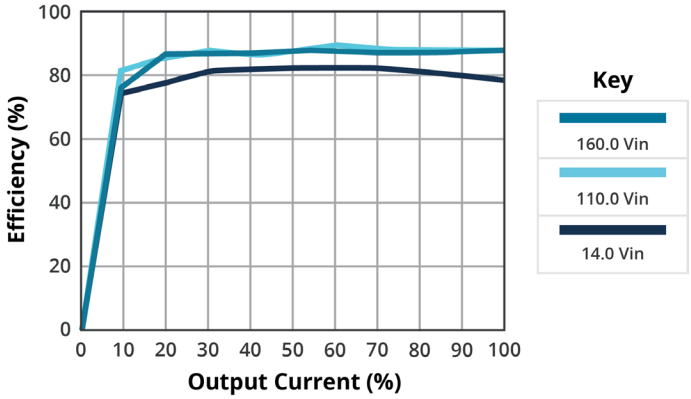

Downloaded from Arrow.com.

REVISION HISTORY

rev.	description	date
1.0	initial release	02/02/2024
1.01	company address updated	11/14/2024
1.02	datasheet updated	05/29/2025
1.03	UVLO updated	12/20/2025

The revision history provided is for informational purposes only and is believed to be accurate.

CUI INC
a bel group

15575 SW Sequoia Pkwy #100
Portland, OR 97224
800.275.4899

Fax 503.612.2383
Belfuse.com
powersupport@belf.com

CUI offers a two (2) year limited warranty. Complete warranty information is listed on our website.

CUI reserves the right to make changes to the product at any time without notice. Information provided by CUI is believed to be accurate and reliable. However, no responsibility is assumed by CUI for its use, nor for any infringements of patents or other rights of third parties which may result from its use.

CUI products are not authorized or warranted for use as critical components in equipment that requires an extremely high level of reliability. A critical component is any component of a life support device or system whose failure to perform can be reasonably expected to cause the failure of the life support device or system, or to affect its safety or effectiveness.

Downloaded from Arrow.com.