

Is Now Part of



ON Semiconductor®

To learn more about ON Semiconductor, please visit our website at
www.onsemi.com

Please note: As part of the Fairchild Semiconductor integration, some of the Fairchild orderable part numbers will need to change in order to meet ON Semiconductor's system requirements. Since the ON Semiconductor product management systems do not have the ability to manage part nomenclature that utilizes an underscore (_), the underscore (_) in the Fairchild part numbers will be changed to a dash (-). This document may contain device numbers with an underscore (_). Please check the ON Semiconductor website to verify the updated device numbers. The most current and up-to-date ordering information can be found at www.onsemi.com. Please email any questions regarding the system integration to Fairchild_questions@onsemi.com.

ON Semiconductor and the ON Semiconductor logo are trademarks of Semiconductor Components Industries, LLC dba ON Semiconductor or its subsidiaries in the United States and/or other countries. ON Semiconductor owns the rights to a number of patents, trademarks, copyrights, trade secrets, and other intellectual property. A listing of ON Semiconductor's product/patent coverage may be accessed at www.onsemi.com/site/pdf/Patent-Marking.pdf. ON Semiconductor reserves the right to make changes without further notice to any products herein. ON Semiconductor makes no warranty, representation or guarantee regarding the suitability of its products for any particular purpose, nor does ON Semiconductor assume any liability arising out of the application or use of any product or circuit, and specifically disclaims any and all liability, including without limitation special, consequential or incidental damages. Buyer is responsible for its products and applications using ON Semiconductor products, including compliance with all laws, regulations and safety requirements or standards, regardless of any support or applications information provided by ON Semiconductor. "Typical" parameters which may be provided in ON Semiconductor data sheets and/or specifications can and do vary in different applications and actual performance may vary over time. All operating parameters, including "Typicals" must be validated for each customer application by customer's technical experts. ON Semiconductor does not convey any license under its patent rights nor the rights of others. ON Semiconductor products are not designed, intended, or authorized for use as a critical component in life support systems or any FDA Class 3 medical devices or medical devices with a same or similar classification in a foreign jurisdiction or any devices intended for implantation in the human body. Should Buyer purchase or use ON Semiconductor products for any such unintended or unauthorized application, Buyer shall indemnify and hold ON Semiconductor and its officers, employees, subsidiaries, affiliates, and distributors harmless against all claims, costs, damages, and expenses, and reasonable attorney fees arising out of, directly or indirectly, any claim of personal injury or death associated with such unintended or unauthorized use, even if such claim alleges that ON Semiconductor was negligent regarding the design or manufacture of the part. ON Semiconductor is an Equal Opportunity/Affirmative Action Employer. This literature is subject to all applicable copyright laws and is not for resale in any manner.

Downloaded from Arrow.com.

KA339/KA339A, KA2901

Quad Comparator

Features

- Single or Dual Supply Operation
- Wide Range of Supply Voltage
  KA339/KA339A, KA2901 : 2 ~ 36V (or ±1 ~ ±18V)
- Low Supply Current Drain 800μA Typ.
- Open Collector Outputs for Wired and Connectors
- Low Input Bias Current 25nA Typ.
- Low Input Offset Current ±2.3nA Typ.
- Low Input Offset Voltage ±1.4mV Typ.
- Input Common Mode Voltage Range Includes Ground.
- Low Output Saturation Voltage
- Output Compatible With TTL, DTL and MOS Logic System

Description

The KA339/KA339A, KA2901 consist of four independent voltage comparators designed to operate from single power supply over a wide voltage range.

14-DIP



14-SOP

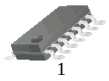

Internal Block Diagram

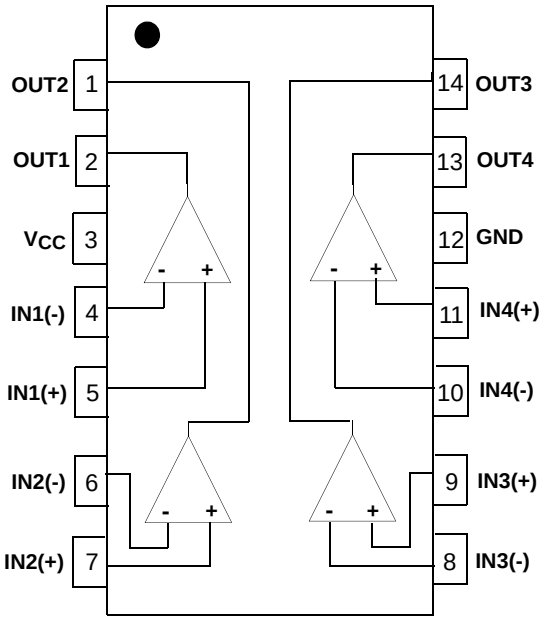

Rev. 1.0.5

©2012 Fairchild Semiconductor Corporation

Downloaded from Arrow.com.

Schematic Diagram

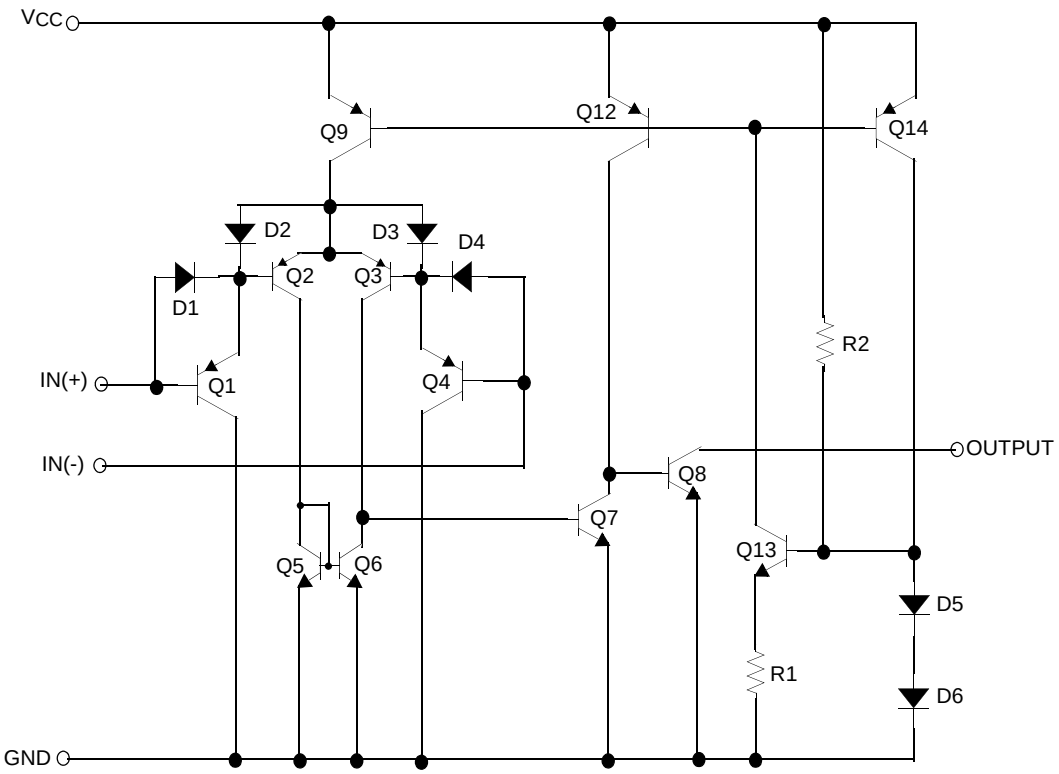

Absolute Maximum Ratings

Parameter	Symbol	Value	Unit
Supply Voltage	V_{CC}	±18 or 36	V
Differential Input Voltage	$V_{I(DIFF)}$	36	V
Input Voltage	V_I	-0.3 to +36	V
Output Short Circuit to GND	-	Continuous	-
Power Dissipation	P_D	570	mW
Operating Temperature KA339/KA339A KA2901	T_{OPR}	 0 ~ +70 -40 ~ +85	°C
Storage Temperature	T_{STG}	-65 ~ +150	°C

Downloaded from Arrow.com.

Electrical Characteristics

(V_{CC} = 5V, T_A = 25°C, unless otherwise specified)

Parameter	Symbol	Conditions		KA339A			KA339			Unit
				Min.	Typ.	Max.	Min.	Typ.	Max.	
Input Offset Voltage	V_{IO}	$V_{O(P)}$ = 1.4V, R_S = 0Ω		-	1	2	-	1.4	5	mV
			Note1	-	-	4.0	-	-	9.0	
Input Offset Current	I_{IO}	$I_{IN(+)}$ - $I_{IN(-)}$, V_{CM} = 0V		-	2.3	50	-	2.3	50	nA
			Note1	-	-	150	-	-	150	
Input Bias Current	I_{BIAS}	V_{CM} = 0V		-	57	250	-	57	250	nA
			Note1	-	-	400	-	-	400	
Input Common Mode Voltage Range	$V_{I(R)}$	V_{CC} = 30V		0	-	V_{CC}-1.5	0	-	V_{CC}-1.5	V
			Note1	0	-	V_{CC}-2	0	-	V_{CC}-2	
Supply Current	I_{CC}	V_{CC} = 5V, R_L = ∞		-	1.1	2.0	-	1.1	2.0	mA
Voltage Gain	G_V	V_{CC} = 15V, R_L ≥ 15kΩ (for large swing)		50	200	-	50	200	-	V/mV
Large Signal Response Time	T_{LRES}	V_I = TTL Logic Swing V_{REF} = 1.4V, V_{RL} = 5V, R_L = 5.1kΩ (Note2)		-	300	-	-	300	-	ns
Response Time	T_{RES}	V_{RL} = 5V, R_L = 5.1kΩ (Note2)		-	1.3	-	-	1.3	-	μs
Output Sink Current	I_{SINK}	$V_{I(-)}$ ≥ 1V, $V_{I(+)}$ = 0V, $V_{O(P)}$ ≤ 1.5V		6	18	-	6	18	-	mA
Output Saturation Voltage	V_{SAT}	$V_{I(-)}$ ≥ 1V, $V_{I(+)}$ = 0V		-	140	400	-	140	400	mV
		I_{SINK} = 4mA	Note1	-	-	700	-	-	700	
Output Leakage Current	$I_{O(LKG)}$	$V_{I(-)}$ = 0V $V_{I(+)}$ = 1V	$V_{O(P)}$ = 5V	-	0.1	-	-	0.1	-	nA
			$V_{O(P)}$ =30V	-	-	1.0	-	-	1.0	μA
Differential Voltage	$V_{I(DIFF)}$		Note1	-	-	36	-	-	36	V

Note:

1. KA339 / KA339A: 0 ≤ T_A ≤ +70°C
   KA2901: -40 ≤ T_A ≤ +85°C
2. These parameters, although guaranteed, are not 100% tested in production.

Downloaded from Arrow.com.

Electrical Characteristics (Continued)

(V_{CC} = 5V, T_A = 25°C, unless otherwise specified)

Parameter	Symbol	Conditions		KA2901			Unit
				Min.	Typ.	Max.	
Input Offset Voltage	V_{IO}	$V_{O(P)}$ = 1.4V, R_S = 0Ω		-	2	7	mV
			Note1	-	9	15	
Input Offset Current	I_{IO}			-	2.3	50	nA
			Note1	-	50	200	
Input Bias Current	I_{BIAS}			-	57	250	nA
			Note1	-	200	500	
Input Common Mode Voltage Range	$V_{I(R)}$	KA2901, V_{CC} =30V		0	-	V_{CC}-1.5	V
			Note1	0	-	V_{CC}-2	
Supply Current	I_{CC}	R_L =∞, V_{CC}=5V		-	1.1	2.0	mA
		R_L =∞, V_{CC} =30V		-	1.6	2.5	
Voltage Gain	G_V	V_{CC} =15V, R_L≥15kΩ (for large swing)		25	100	-	V/mV
Large Signal Response Time	T_{LRES}	V_I =TTL Logic Swing V_{REF} =1.4V, V_{RL} = 5V, R_L =5.1kΩ (Note2)		-	300	-	ns
Response Time	T_{RES}	V_{RL} = 5V, R_L =5.1kΩ (Note2)		-	1.3	-	μs
Output Sink Current	I_{SINK}	$V_{I(-)}$ ≥ 1V, $V_{I(+)}$ = 0V, $V_{O(P)}$ ≤ 1.5V		6	18	-	mA
Output Saturation Voltage	V_{SAT}	$V_{I(-)}$ ≥ 1V, $V_{I(+)}$ =0V		-	140	400	mV
		I_{SINK} = 4mA	Note1	-	-	700	
Output Leakage Current	$I_{O(LKG)}$	$V_{I(-)}$ = 0V, $V_{I(+)}$ = 1V	$V_{O(P)}$ = 5V	-	0.1	-	nA
			$V_{O(P)}$ = 30V	-	-	1.0	μA
Differential Voltage	$V_{I(DIFF)}$	-	Note1	-	-	36	V

Note:

1. KA339 / KA339A: 0 ≤ T_A ≤ +70°C
   KA2901: -40 ≤ T_A ≤ +85°C
2. These parameters, although guaranteed, are not 100% tested in production.

Downloaded from Arrow.com.

Typical Performance Characteristics

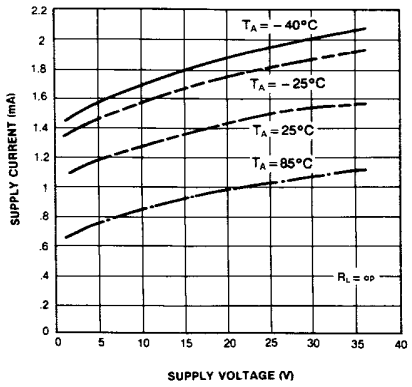

Figure 1. Supply Current vs Supply Voltage

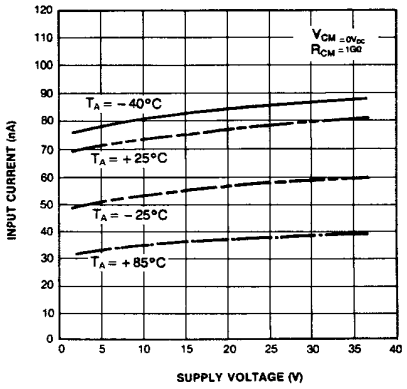

Figure 2. Input Current vs Supply Voltage

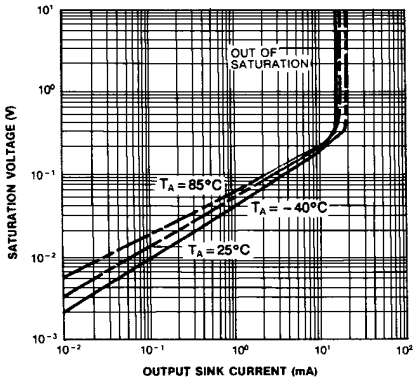

Figure 3. Output Saturation Voltage vs Sink Current

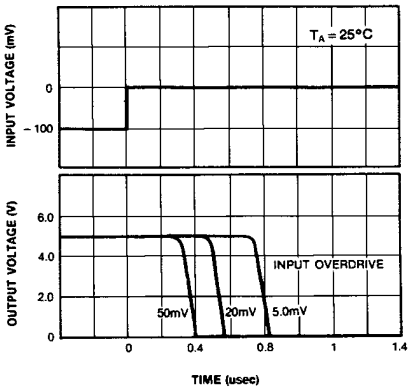

Figure 4. Response Time for Various Input Overdrive-Negative Transition

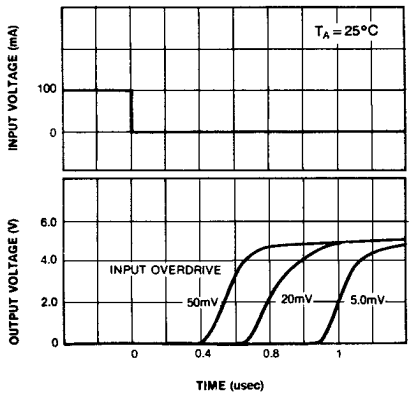

Figure 5. Response Time for Various Input Overdrive-Positive Transition

Downloaded from Arrow.com.

Mechanical Dimensions

Package

Dimensions in millimeters

14-DIP

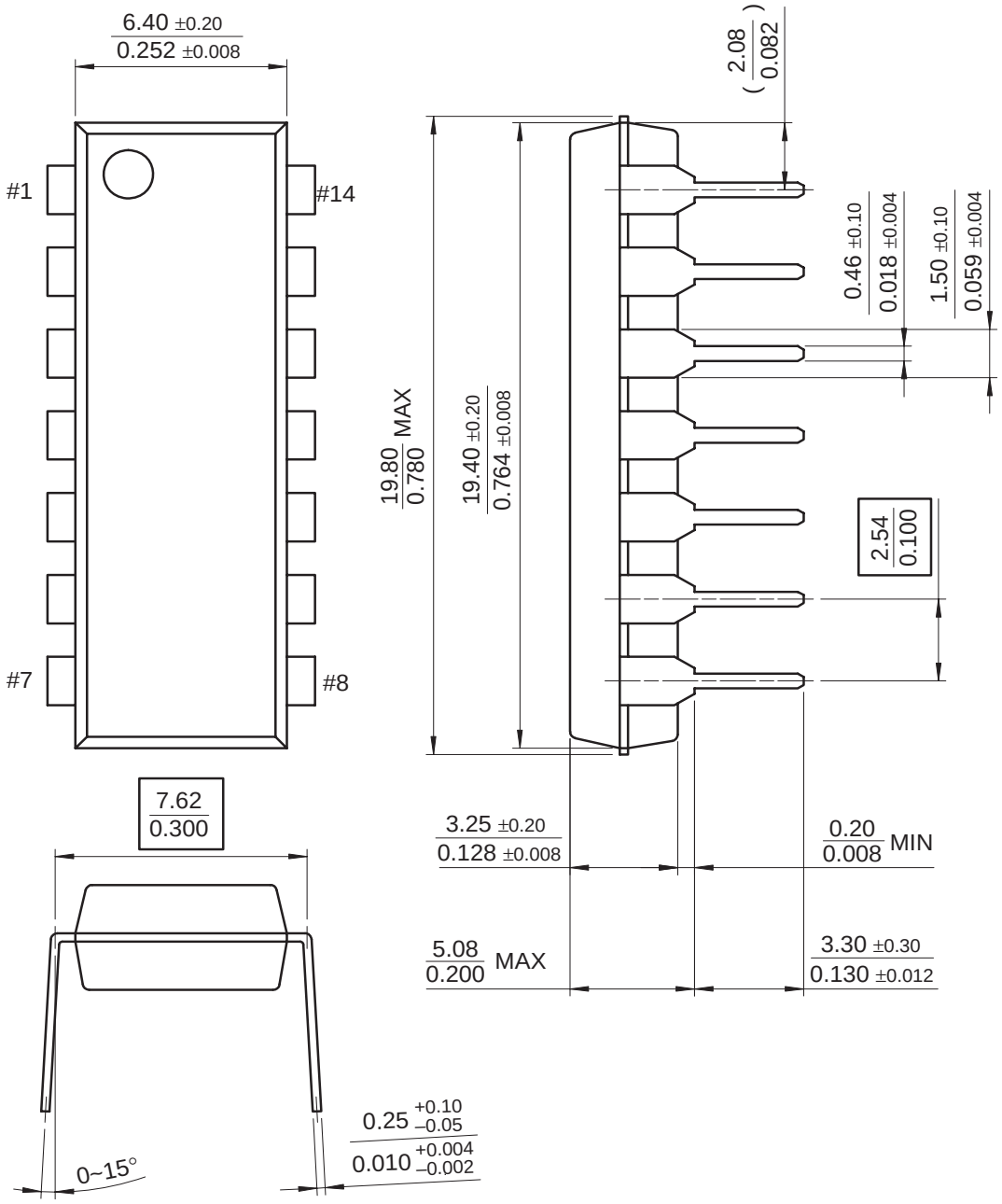

Downloaded from Arrow.com.

Mechanical Dimensions (Continued)

Package

Dimensions in millimeters

14-SOP

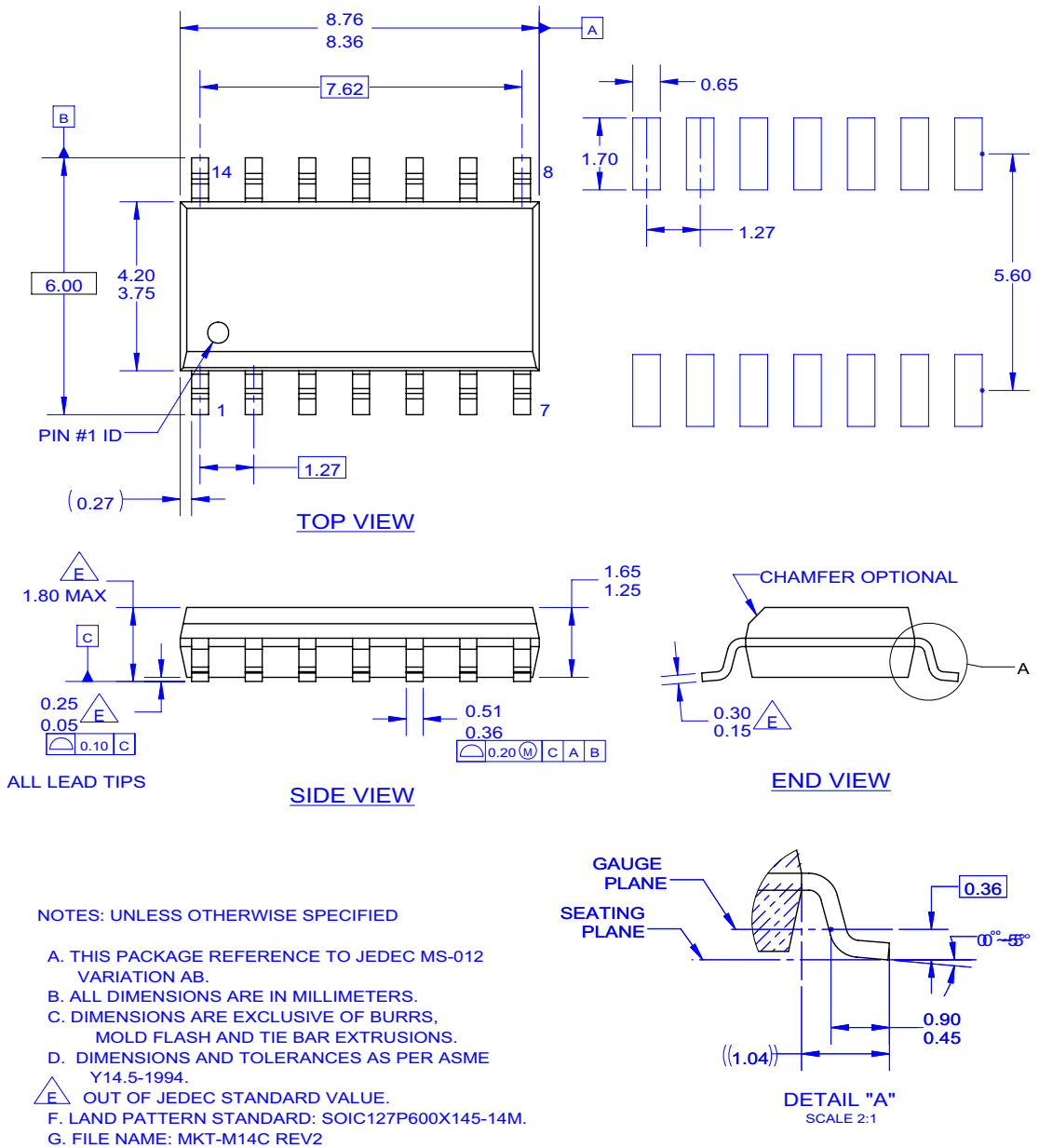

NOTES: UNLESS OTHERWISE SPECIFIED

A. THIS PACKAGE REFERENCE TO JEDEC MS-012 VARIATION AB.
B. ALL DIMENSIONS ARE IN MILLIMETERS.
C. DIMENSIONS ARE EXCLUSIVE OF BURRS, MOLD FLASH AND TIE BAR EXTRUSIONS.
D. DIMENSIONS AND TOLERANCES AS PER ASME Y14.5-1994.
E. OUT OF JEDEC STANDARD VALUE.
F. LAND PATTERN STANDARD: SOIC127P600X145-14M.
G. FILE NAME: MKT-M14C REV2

Downloaded from Arrow.com.

Ordering Information

Product Number	Package	Operating Temperature
KA339	14-DIP	0 ~ +70°C
KA339A		
KA339D	14-SOP	
KA339AD		
KA2901D	14-SOP	-40 ~ +85°C

DISCLAIMER

FAIRCHILD SEMICONDUCTOR RESERVES THE RIGHT TO MAKE CHANGES WITHOUT FURTHER NOTICE TO ANY PRODUCTS HEREIN TO IMPROVE RELIABILITY, FUNCTION OR DESIGN. FAIRCHILD DOES NOT ASSUME ANY LIABILITY ARISING OUT OF THE APPLICATION OR USE OF ANY PRODUCT OR CIRCUIT DESCRIBED HEREIN; NEITHER DOES IT CONVEY ANY LICENSE UNDER ITS PATENT RIGHTS, NOR THE RIGHTS OF OTHERS.

LIFE SUPPORT POLICY

FAIRCHILD'S PRODUCTS ARE NOT AUTHORIZED FOR USE AS CRITICAL COMPONENTS IN LIFE SUPPORT DEVICES OR SYSTEMS WITHOUT THE EXPRESS WRITTEN APPROVAL OF THE PRESIDENT OF FAIRCHILD SEMICONDUCTOR CORPORATION. As used herein:

1. Life support devices or systems are devices or systems which, (a) are intended for surgical implant into the body, or (b) support or sustain life, and (c) whose failure to perform when properly used in accordance with instructions for use provided in the labeling, can be reasonably expected to result in a significant injury of the user.
2. A critical component in any component of a life support device or system whose failure to perform can be reasonably expected to cause the failure of the life support device or system, or to affect its safety or effectiveness.

© 2012 Fairchild Semiconductor Corporation

Downloaded from Arrow.com.

ON Semiconductor and ON are trademarks of Semiconductor Components Industries, LLC dba ON Semiconductor or its subsidiaries in the United States and/or other countries. ON Semiconductor owns the rights to a number of patents, trademarks, copyrights, trade secrets, and other intellectual property. A listing of ON Semiconductor's product/patent coverage may be accessed at www.onsemi.com/site/pdf/Patent−Marking.pdf. ON Semiconductor reserves the right to make changes without further notice to any products herein. ON Semiconductor makes no warranty, representation or guarantee regarding the suitability of its products for any particular purpose, nor does ON Semiconductor assume any liability arising out of the application or use of any product or circuit, and specifically disclaims any and all liability, including without limitation special, consequential or incidental damages. Buyer is responsible for its products and applications using ON Semiconductor products, including compliance with all laws, regulations and safety requirements or standards, regardless of any support or applications information provided by ON Semiconductor. "Typical" parameters which may be provided in ON Semiconductor data sheets and/or specifications can and do vary in different applications and actual performance may vary over time. All operating parameters, including "Typicals" must be validated for each customer application by customer's technical experts. ON Semiconductor does not convey any license under its patent rights nor the rights of others. ON Semiconductor products are not designed, intended, or authorized for use as a critical component in life support systems or any FDA Class 3 medical devices or medical devices with a same or similar classification in a foreign jurisdiction or any devices intended for implantation in the human body. Should Buyer purchase or use ON Semiconductor products for any such unintended or unauthorized application, Buyer shall indemnify and hold ON Semiconductor and its officers, employees, subsidiaries, affiliates, and distributors harmless against all claims, costs, damages, and expenses, and reasonable attorney fees arising out of, directly or indirectly, any claim of personal injury or death associated with such unintended or unauthorized use, even if such claim alleges that ON Semiconductor was negligent regarding the design or manufacture of the part. ON Semiconductor is an Equal Opportunity/Affirmative Action Employer. This literature is subject to all applicable copyright laws and is not for resale in any manner.

PUBLICATION ORDERING INFORMATION

LITERATURE FULFILLMENT:
Literature Distribution Center for ON Semiconductor
19521 E. 32nd Pkwy, Aurora, Colorado 80011 USA
Phone: 303−675−2175 or 800−344−3860 Toll Free USA/Canada
Fax: 303−675−2176 or 800−344−3867 Toll Free USA/Canada
Email: orderlit@onsemi.com

N. American Technical Support: 800−282−9855 Toll Free USA/Canada
Europe, Middle East and Africa Technical Support:
Phone: 421 33 790 2910
Japan Customer Focus Center
Phone: 81−3−5817−1050

ON Semiconductor Website: **www.onsemi.com**

Order Literature: http://www.onsemi.com/orderlit

For additional information, please contact your local Sales Representative

Downloaded from Arrow.com.