REV.	DATE	ECR NO.	DESCRIPTION
NC	7–19–11	XXXXXX	INITIAL RELEASE

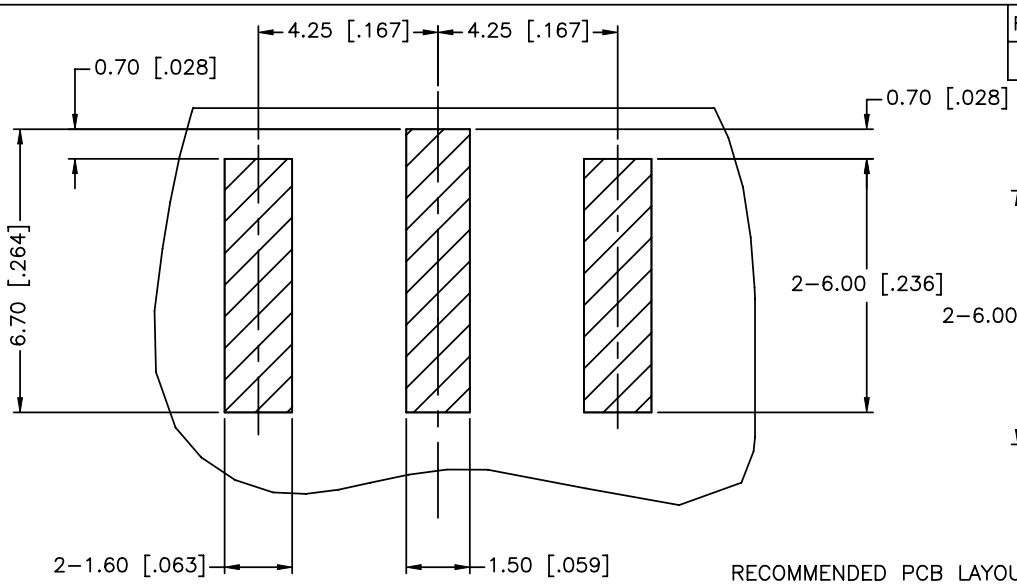

TOP VIEW

RECOMMENDED PCB LAYOUT

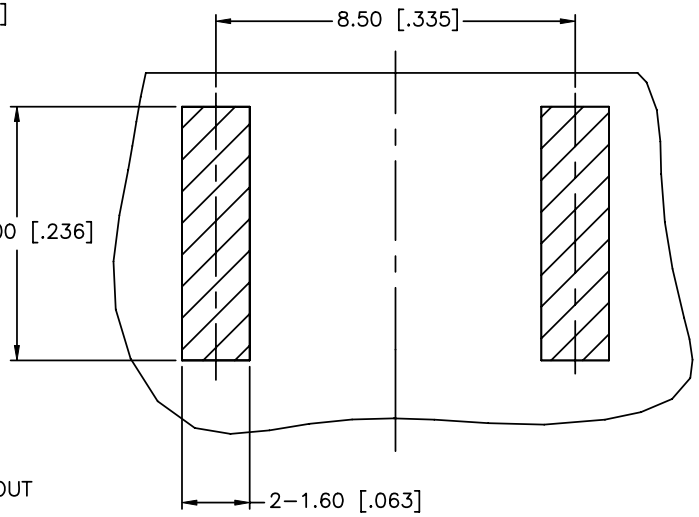

BOTTOM VIEW

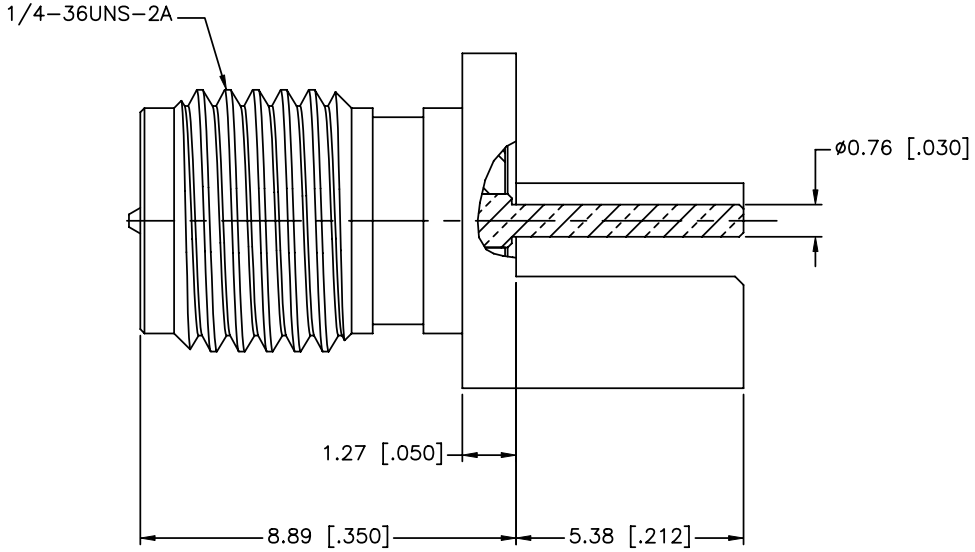

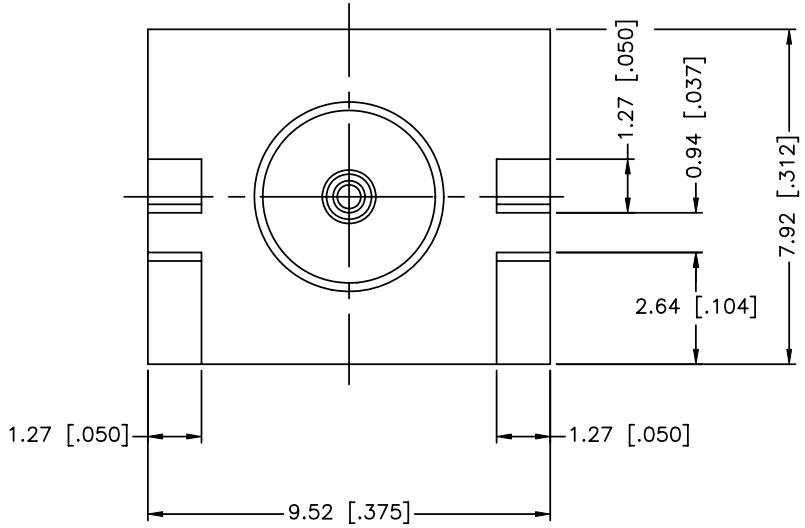

3	CONTACT PIN	BRASS	GOLD	1
2	INSULATOR	PTFE	NATURAL	1
1	BODY	BRASS	GOLD	1
	DESCRIPTION	MATERIAL	FINISH	QTY

UNLESS OTHERWISE SPECIFIED DIMENSIONS ARE IN MILLIMETERS. DIMENSIONS IN [ ] ARE IN INCHES AND FOR CUSTOMER REFERANCE ONLY.

UNLESS OTHERWISE SPECIFIED TOLERANCES FOR MILLIMETERS ARE:
0.5 – 8mm ± 0.20mm
8 – 30mm ± 0.40mm
30 – 120mm ± 0.50mm

UNLESS OTHERWISE SPECIFIED TOLERANCES FOR INCHES ARE:
.020 – .315 = ± 0.007"
.315 – 1.180 = ± 0.015"
1.180 – 4.724 = ± 0.020"

DO NOT SCALE DRAWING

APPROVALS		DATE
DRAWN	M.ZHANG	7–19–11
CHECKED		
ISSUED		
SHEET	1 OF 1	
CAD FILE	C:/CONNEX/132343RP.DWG	

Amphenol Connex

PART DESCRIPTION
RP–SMA END LAUNCH RECEPT. JACK
(.032" BOARD THICKNESS)

PART NO. 132343RP

DWG. NO. 132343RP.DWG | REV. NC | SIZE A | SCALE NA

Downloaded from Arrow.com.