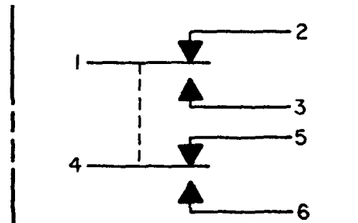
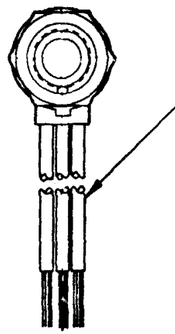
MICRO SWITCH
FREEPORT ILLINOIS U S A
A DIVISION OF HONEYWELL
FED. MFG. CODE 91929

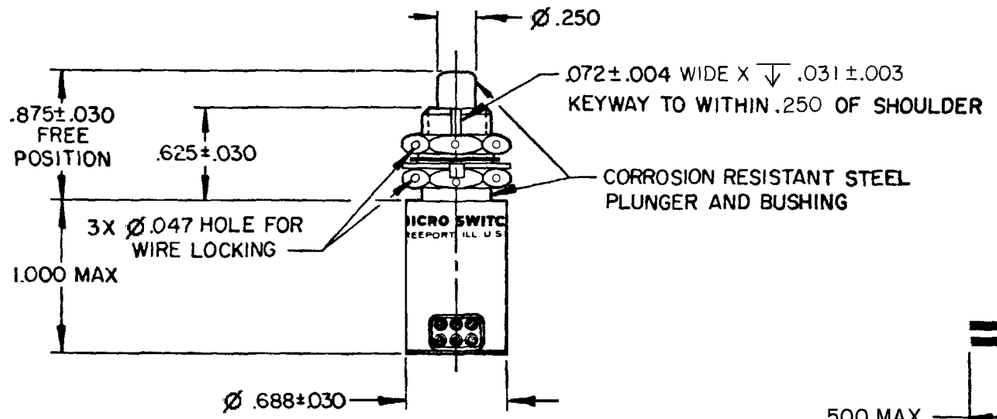
SWITCH - ENCLOSED

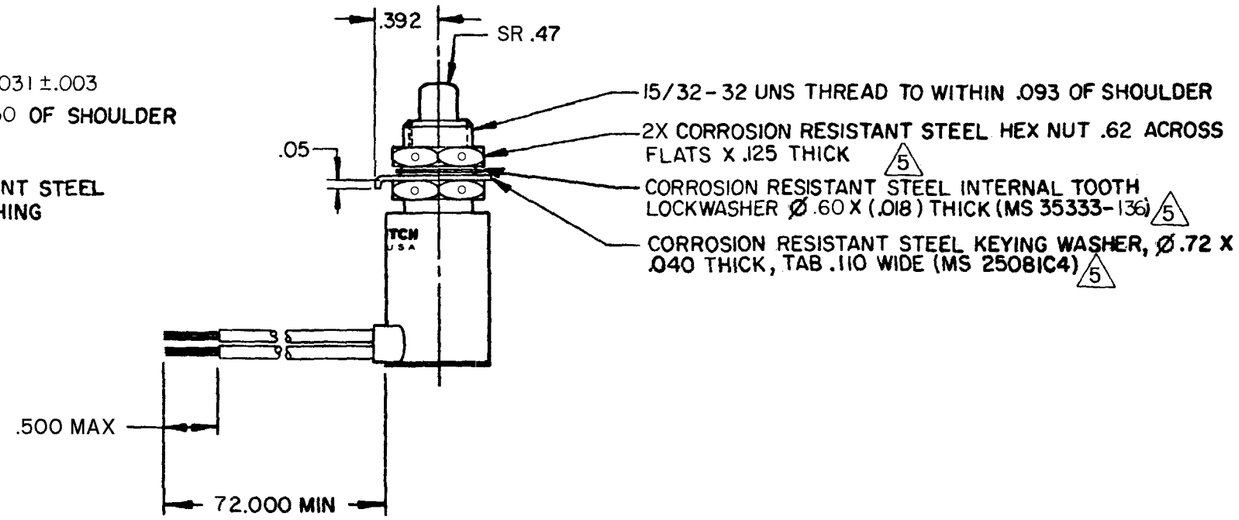
CATALOG LISTING
602EN16-6



CIRCUIT DIAGRAM


6X NO. 20 WIRE LEAD PRE MIL-W-22759/11
MARKED WITH CIRCUIT IDENTIFICATION AND WIRE
GAGE (1-20, 2-20, ETC) PER MIL-W-5088





NOTES
1 - **CORROSION RESISTANT STEEL ENCLOSURE**
2 - **CIRCUIT DIAGRAM**, CAT. LIST., FED. MFG. CODE AND DATE CODE ARE PERMANENTLY MARKED ON SIDE OF HOUSING
3 - **SWITCH SEALED PER MIL-PRF-8805 SYMBOL 4**
4 - **COINCIDENCE OF OPERATING AND RELEASING POINTS:** .010 OF PLUNGER TRAVEL
5 - HARDWARE MAY BE PACKAGED UNASSEMBLED PER MIL-PRF-8805

THIS DRAWING COVERS A PROPRIETARY ITEM AND IS THE PROPERTY OF MICRO SWITCH, A DIVISION OF HONEYWELL. THIS DRAWING IS NOT TO BE COPIED OR USED WITHOUT THE APPROVAL OF MICRO SWITCH.

THIRD ANGLE PROJECTION

SCALE FULL

DO NOT SCALE PRINT

TOLERANCES
APPLY TO DESIGN UNITS. CONVERSIONS ARE ONLY FOR REFERENCE. UNLESS NOTED, TOLERANCES ARE ±

	DIM. mm	TOL. mm/m	DIM. in	TOL. in/m
NO PLACES	X	1/.04		
ONE PLACE	X.X	0.4/.016	X X	0.8/.03
TWO PLACES	X.XX	0.15/.008	X.XX	0.38/.015
THREE PLACES			X.XXX	0.13/.005
ANGLES				

DESIGN UNITS: SI METRIC ☐ US CUSTOMARY ☑

RAW MATERIAL-COMMERCIAL STANDARD
MICRO SWITCH STANDARDS APPLY

DIMENSIONS ARE TO BE MET BEFORE PROTECTIVE COATINGS ARE APPLIED

WEIGHT 6.2 OZ MAX

CHARACTERISTICS	
OPERATING FORCE	6-12 LB
FULL OVERTRAVEL FORCE	30 LB MAX
RELEASE FORCE	4 LB MIN
PRETRAVEL	.040 MAX
DIFFERENTIAL TRAVEL	.020 MAX
OVERTRAVEL	.125 MIN

ELECTRICAL DATA

CONTACT ARRANGEMENT
2X SPDT

LOAD	28 VDC	
	SEA LEVEL	50,000 FT.
RES	7	7
IND	4	2.5
MOTOR	4	

ANSI Y14.5M-1982 APPLIES

REVISIONS

A	C044351	D J W	5 MAR 80		
B	C047573	J A P	7 AUG 80		
C	C0498060	RAG	28 SEP 81	CMH	17MAR08
D	C057370	J A P	14 MAY 85	CHECK	
E	C094274	DLM	17 MAR 99	CHECK	7 MAR 00
F	201750	C S L	16 NOV 00	CHECK	C E B
G	0038166	NR	17MAR08	CHECK	5 MAR 80

DRAWN D J W

RASTER FO-5285-1-A

ISSUE 17

DRAWING NUMBER M

RELEASE NO. SR-11915

REPLACES X33967

CATALOG LISTING 602EN16-6 PAGE 1 OF 1

Downloaded from Arrow.com.