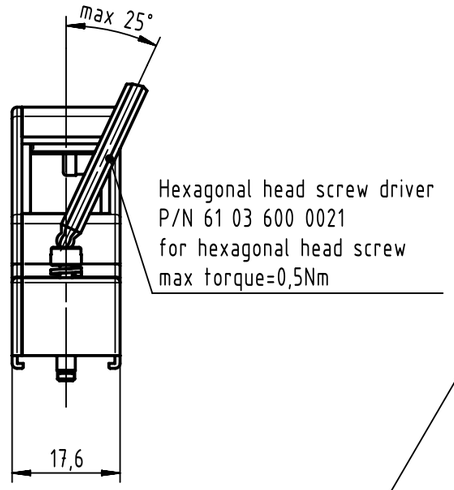

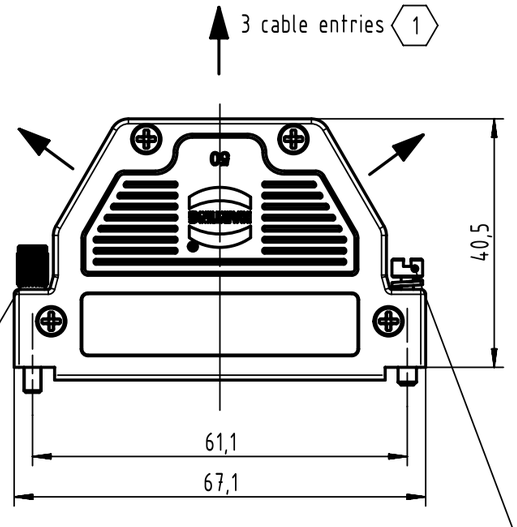

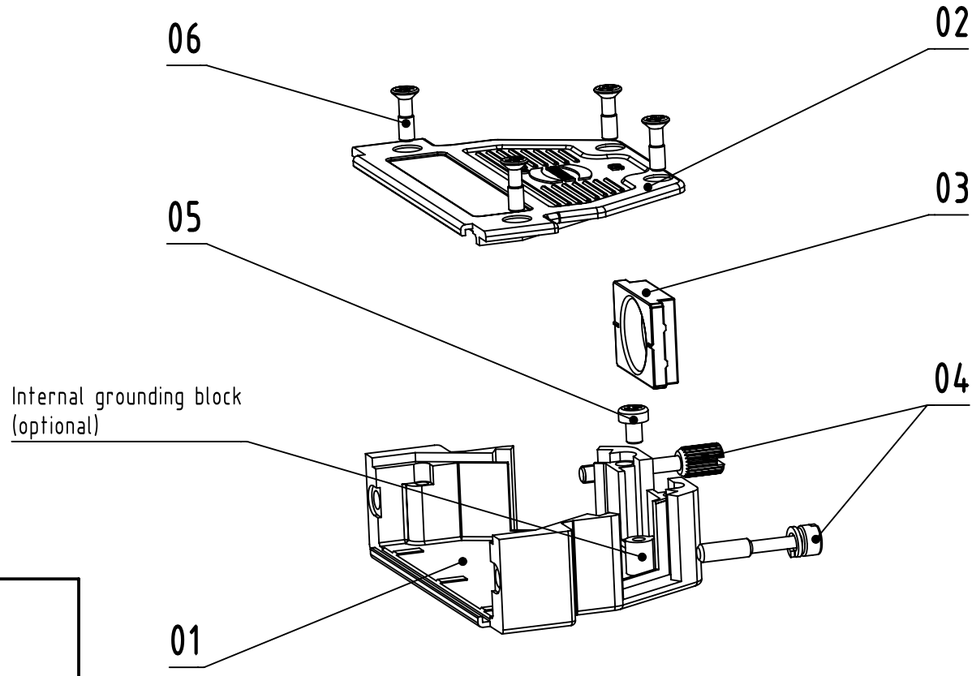

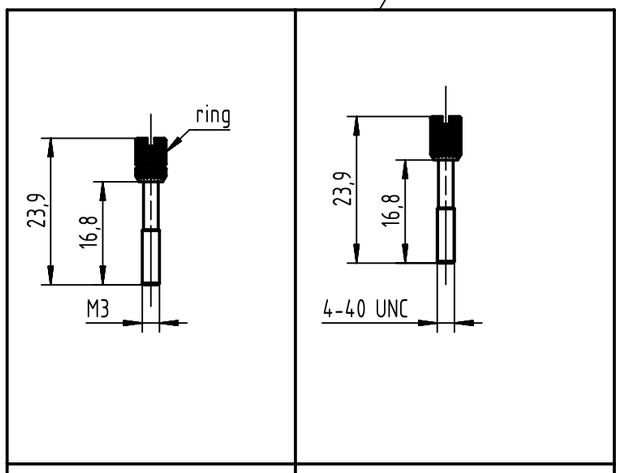

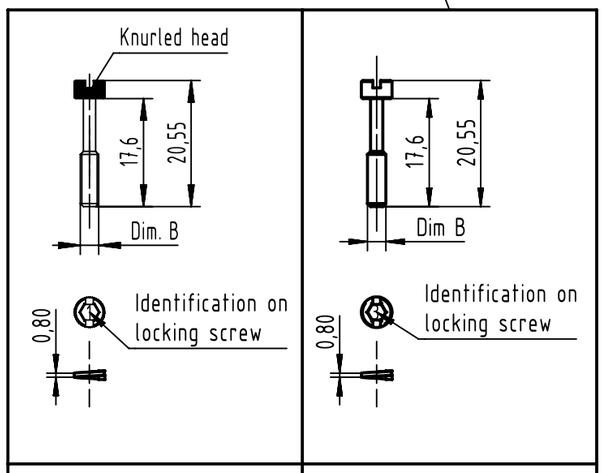

1 For strain relief an additional InduCom cable clamp or a crimp flange and ferrule combination depending on the cable is necessary

Content InduCom hood			Spare parts (MOQ100)	
Pos.	Quantity	Description	Part Number	Quantity
01	1	metal hood		
02	1	metal cover		
03	2	blank piece (not assembled)	6103 000 0041	1
04	2	locking screw (assembled):		
		either knurled thumb screws 4-40 UNC (for 0119)	0967 002 9018	1
		or hexagonal M3 with captive washer (for 1119)	0967 002 9019	1
		or hexagonal 4-40 UNC with captive washer (for 2119)	0967 002 9020	1
		or knurled thumb screws M3 (for 3119)	0967 002 9017	1
05	1	grounding screw (not assembled) for version with internal grounding block	0963 002 0007	1
06	4	cover screw M2,5 with philips head (not losable in cover)	0963 002 0006	1

6103 001 Y019 ZZZ				
6103 001 0019	4-40 UNC	Knurled thumb screw	Without ring	With internal grounding block
6103 001 1019	M3	Hexagonal screw with captive washer	1 & Knurled head	
6103 001 2019	4-40 UNC	Hexagonal screw with captive washer	3	
6103 001 3019	M3	Knurled thumb screw	With ring	
6103 001 0019 010	4-40 UNC	Knurled thumb screw	Without ring	Without internal grounding block
6103 001 1019 010	M3	Hexagonal screw with captive washer	1 & Knurled head	
6103 001 2019 010	4-40 UNC	Hexagonal screw with captive washer	3	
6103 001 3019 010	M3	Knurled thumb screw	With ring	
Part Number	Dim B screw size	Screw type	Identification on locking screw	Internal grounding block

All Dimensions in mm
Original Size DIN A3

Scale 1:1

Free size tol.

Ref.

Sub.

All rights reserved

Department EL PD

Created by ZENGD | Inspected by LUOK | Standardisation ROEBEN | Date 2021-12-29 | State Final Release

HARTING
D-32339 Espelkamp

Title: InduCom 50P top side entry hood assembly

Doc-Key / ECM-Nr. 100887621/UGD/000/A 500000207961

Type TB | Number 6103001Y019 | Rev. A | Page 1/1

A3

Downloaded from Arrow.com.