Overview

The KEMET T493 Series is designed for the High Reliability Series (HRA) requirements of military and aerospace applications. This series is a surface mount product offering various lead-frame plating options, Weibull grading options, surge current testing, F-Tech (an improved anode manufacturing process) and Simulated Breakdown Voltage (SBDV) screening options to improve long term reliability. Standard, low, and ultra-low ESR options are available. All lots of this series are conditioned with MIL–PRF–55365 Group A testing. This series is also approved for DLA Drawing 07016 (please see part number list specific to this drawing).

KEMET's F-Tech eliminates hidden defects in the dielectric which continue to grow in the field, causing capacitor failures. Based on the fundamental understanding of degradation mechanisms in tantalum and niobium capacitors, F-Tech incorporates multiple process methodologies. Some minimize the oxygen and carbon content in the anodes which become contaminants and can lead to the crystallization of the anodic oxide dielectric. This process methodology reduces the contaminants, improving quality of the dielectric. An additional technology provides a stronger mechanical connection point between the tantalum lead wire and tantalum anode, enhancing robustness and product reliability. The benefit of F-Tech is illustrated by a 2,000 hour, 85°C, 1.32 X rated voltage accelerated life test. F-Tech parts see no degradation while standard tantalum's have 1.5 orders of magnitude degradation in leakage current.

The KEMET patented Simulated Breakdown Screening (SBDS) is a nondestructive testing technique that simulates the breakdown voltage (BDV) of a capacitor without damage to its dielectric or to the general population of capacitors. This screening identifies hidden defects in the dielectric, providing the highest level of dielectric testing. SBDS is based on the simulation of breakdown voltage (BDV), the ultimate test of the dielectric in a capacitor.

Low BDV indicates defects in the dielectric, and therefore, a higher probability of failure in the field. High BDV indicates a stronger dielectric and high-reliability performance in the field. This new screening method allows KEMET to identify the breakdown voltage of each individual capacitor and provide only the strongest capacitors from each lot.

SBDS is currently available on select part types in the T493 and T497 Series. Please contact KEMET for details on ordering other part types with these capabilities.

KEMET offers these technologies per the following options:
- F-Tech only
- SBDS only
- Combination of both F-Tech and SBDS for the ultimate protection

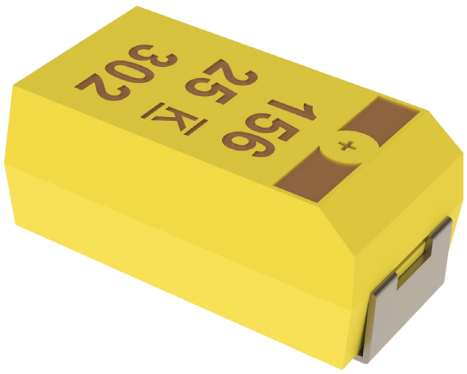

Downloaded from Arrow.com.

Benefits

- F-Tech and Simulated Breakdown Voltage (SBDS) screening options available
- Taped and reeled per EIA 481
- Symmetrical, compliant terminations
- Laser-marked case
- 100% surge current test available on all case sizes
- Termination options B, C, H, K, T, N, and M
- Weibull failure options B and C
- All parts tested per Group A of MIL–PRF–55365
- Approved for DLA Drawing 07016 applications*

** Defense Logistics Agency (DLA), previously identified as DSCC*

Applications

Typical applications include decoupling and filtering in military and aerospace applications.

Environmental Compliance

RoHS Compliant (6/6) according to Directive 2002/95/EC when ordered with 100% Sn solder.

K-SIM

For a detailed analysis of specific part numbers, please visit ksim3.kemet.com to access KEMET's K-SIM software. KEMET K-SIM is designed to simulate behavior of components with respect to frequency, ambient temperature, and DC bias levels.

Ordering Information

T	493	D	227	K	006	C	H	61	20	
Capacitor Class	Series	Case Size	Capacitance Code (pF)	Capacitance Tolerance	Rated Voltage (VDC)	Failure Rate/ Design	Termination Finish	Added Surge Current Options	ESR	Packaging (C-Spec)
T = Tantalum	Military HRA	A, B, C, D, E, X	First two digits represent significant figures. Third digit specifies number of zeros.	J = ±5% K = ±10% M = ±20%	004 = 4 006 = 6.3 008 = 8 010 = 10 016 = 16 020 = 20 025 = 25 035 = 35 050 = 50 063 = 63 075 = 75	A = N/A B = 0.1% /1,000 hours C = 0.01% /1,000 hours	C = Hot solder dipped H = Standard solder coated (SnPb 5% Pb minimum) B = Gold plated K = Solder fused T = 100% Tin N = Non-magnetic 100% Tin (Sn) M = Non-magnetic (SnPb)	61 = No additional surge current testing 62 = 10 Cycles, 25°C±5°C, after Weibull. 63 = 10 cycles, −55°C±5°C and 85°C±5°C, after Weibull. 64 = 10 cycles, −55° ±5°C and +85°C ±5°C, before Weibull.	10 = ESR – Standard 20 = ESR – Low 30 = ESR – Ultra low	Blank = 7" Reel 7280 = 13" Reel 7610 = Bulk Bag 7640 = Bluk plastic box WAFL = Waffle Pack

For detailed part number offerings, please refer to:
Table 1A – KEMET HRA
Table 1B – DLA Drawing 07016

Downloaded from Arrow.com.

Ordering Information – DLA Drawing 07016

07016-	001	K	B	H	A
Drawing Number	Dash Number	Capacitance Tolerance	Reliability Grade	Termination Finish	Surge
	See Part Number Table	J = ±5% K = ±10% M = ±20%	B = 0.1%/1,000 hours C = 0.01%/1,000 hours	C = Hot solder dipped H = Standard solder coated (SnPb 5% Pb minimum) B = Gold plated	A = + 25°C after Weibull B = −55°C and +85°C after Weibull C = −55°C and + 85°C before Weibull Z or no option= No test required

For detailed part number offerings, please refer to:
Table 1A –KEMET HRA
Table 1B – DLA Drawing 07016

Ordering Information – F-Tech & Simulated Breakdown Screening (SBDS)

T	493	D	226	K	020	C	H	61	20	
Capacitor Class	Series	Case Size	Capacitance Code (pF)	Capacitance Tolerance	Rated Voltage (VDC)	Failure Rate/ Design	Termination Finish	Added Surge Current Options	Screening/ESR	Packaging (C-Spec)
T = Tantalum	Military HRA	A, B, C, D, E, X	First two digits represent significant figures. Third digit specifies number of zeros.	J = ±5% K = ±10% M = ±20%	025 = 25 035 = 35 050 = 50 063 = 63	A = N/A B = 0.1% /1,000 hours C = 0.01% /1,000 hours	C = Hot solder dipped H = Standard solder coated (SnPb 5% Pb minimum) B = Gold plated K = Solder fused K = Solder fused T = 100% Tin N = Non-magnetic 100% Tin (Sn) M = Non-magnetic (SnPb)	61 = No additional surge current testing 62 = 10 Cycles, 25°C±5°C, after Weibull. 63 = 10 cycles, −55°C±5°C and 85°C±5°C, after Weibull. 64 = 10 cycles, −55° ±5°C and +85°C ±5°C, before Weibull.	11 = F-Tech + SBDS * 12 = SBDS 13 = F-Tech * 21 = Low ESR + 11 22= Low ESR + 12 23 = Low ESR + 13 31= Ultra Low ESR + 11 32 = Ultra Low ESR + 12 33 = Ultra Low ESR + 13	Blank = 7" Reel 7280 = 13" Reel 7610 = Bulk Bag 7640 = Bluk plastic box WAFL = Waffle Pack

** F-Tech screening option not available on A and B case size part types. F-Tech is available in select "C", "D", and "X" case sizes in 20 V and higher rated voltage*

Performance Characteristics

Item	Performance Characteristics
Operating Temperature	−55° C to 125° C
Rated Capacitance Range	0.1 – 470 µF at 120 Hz/25°C
Capacitance Tolerance	J Tolerance (5%), K Tolerance (10%), M Tolerance (20%)
Rated Voltage Range	4 – 63 V
DF (120 Hz)	Refer to Part Number Electrical Specification Table
ESR (100 kHz)	Refer to Part Number Electrical Specification Table
Leakage Current	≤ 0.01 CV (µA) at rated voltage after 5 minutes

Downloaded from Arrow.com.

Qualification

Test	Condition		Characteristics			
Endurance	85°C at rated voltage, 2,000 hours 125°C at 2/3 rated voltage, 2,000 hours		Δ C/C	Within ±10% of initial value		
			DF	Within initial limits		
			DCL	Within 1.25 x initial limit		
			ESR	Within initial limits		
Storage Life	125°C at 0 volts, 2,000 hours		Δ C/C	Within ±10% of initial value		
			DF	Within initial limits		
			DCL	Within 1.25 x initial limit		
			ESR	Within initial limits		
Thermal Shock	MIL–STD–202, Method 107, Condition B, mounted, –55°C to 125°C, 1,000 cycles		Δ C/C	Within ±5% of initial value		
			DF	Within initial limits		
			DCL	Within 1.25 x initial limit		
			ESR	Within initial limits		
Temperature Stability	Extreme temperature exposure at a succession of continuous steps at +25°C, –55°C, +25°C, +85°C, +125°C, +25°C		+25°C	–55°C	+85°C	+125°C
		Δ C/C	IL*	±10%	±10%	±15%
		DF	IL	IL	1.5 x IL	1.5 x IL
		DCL	IL	N/A	10 x IL	12 x IL
Surge Voltage	25°C and 85°C, 1.32 x rated voltage 1,000 cycles (125°C, 1.2 x rated voltage)		Δ C/C	Within ±5% of initial value		
			DF	Within initial limits		
			DCL	Within initial limits		
			ESR	Within initial limits		
Mechanical Shock/ Vibration	MIL–STD–202, Method 213, Condition I, 100 G peak MIL–STD–202, Method 204, Condition D, 10 Hz to 2,000 Hz, 20 G peak		Δ C/C	Within ±10% of initial value		
			DF	Within initial limits		
			DCL	Within initial limits		

**IL = Initial limit*

Certification

MIL–PRF–55365/8
DLA Drawing 07016

Downloaded from Arrow.com.

Electrical Characteristics

ESR vs. Frequency

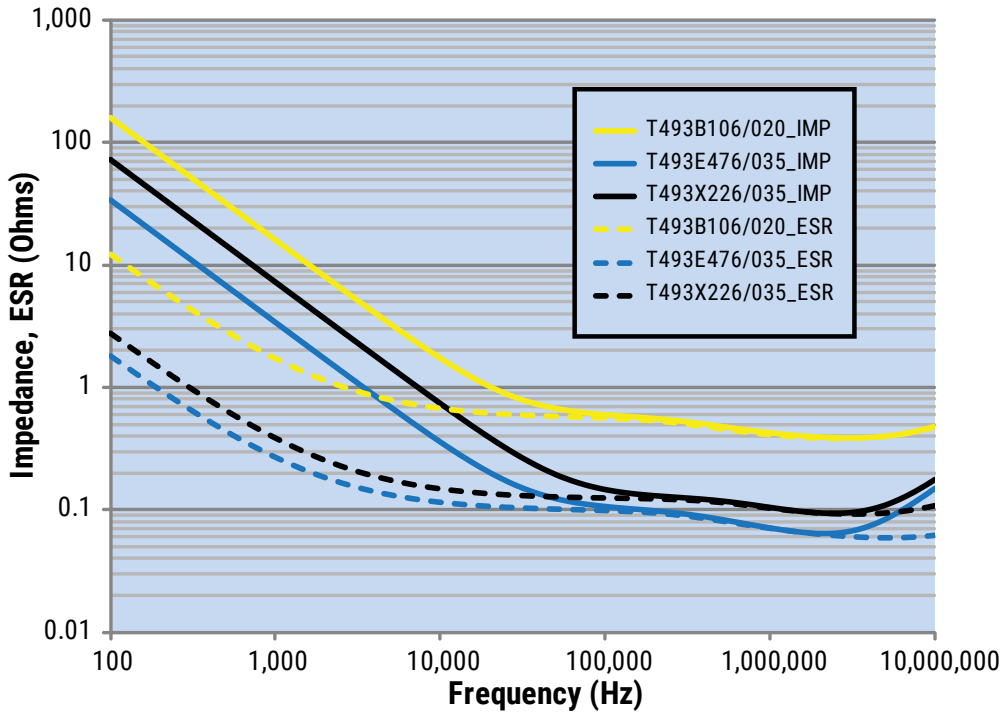

Capacitance vs. Frequency

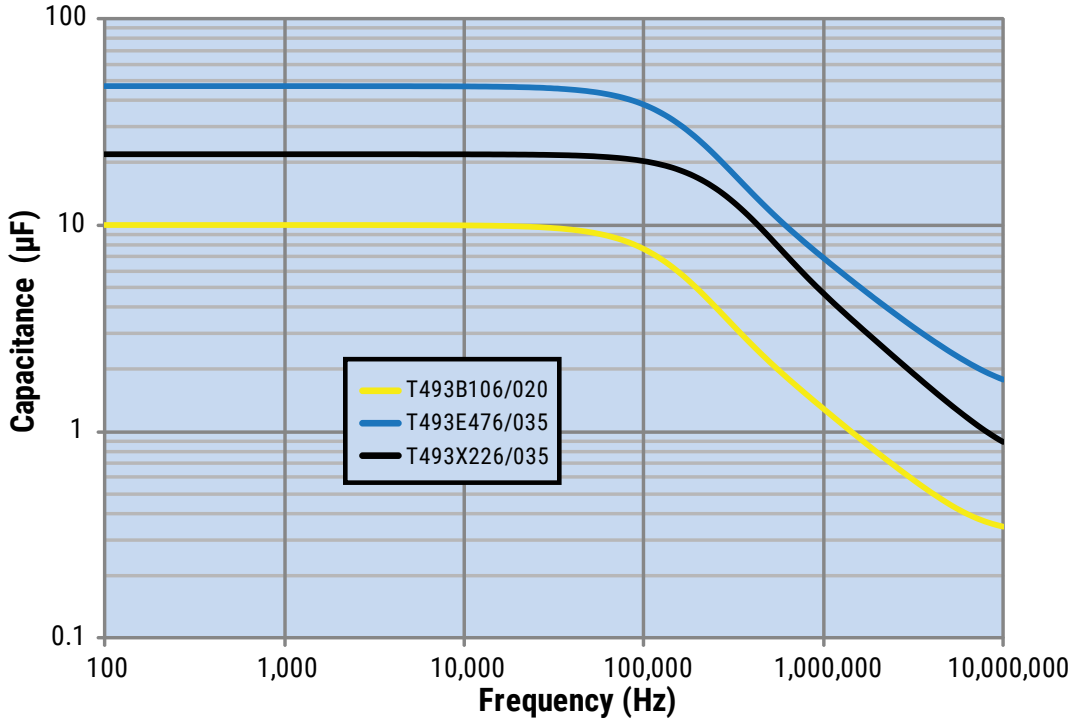

Downloaded from Arrow.com.

Dimensions – Millimeters (Inches)

Metric will govern

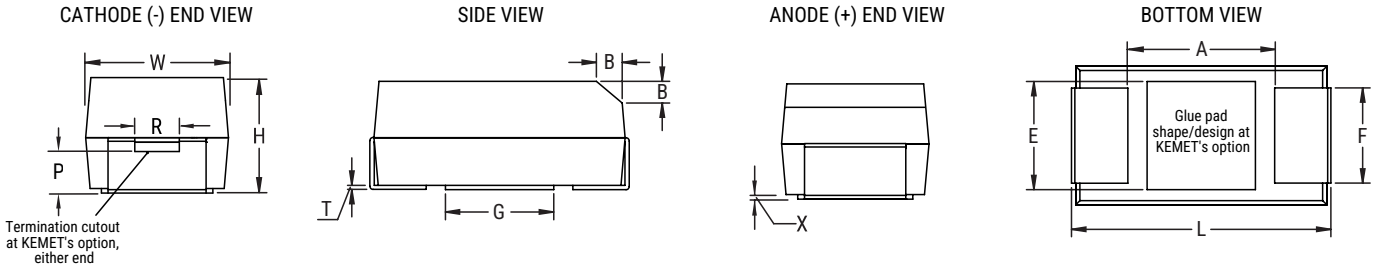

Case Size		Component													Typical Weight
KEMET	EIA	L	W	H	F ±0.1 ±(.004)	S ±0.3 ±(.012)	B ±0.15 (Ref) ±.006	X (Ref)	P (Ref)	R (Ref)	T (Ref)	A (Min)	G (Ref)	E (Ref)	(mg)
A	3216–18	3.2±0.2 (0.126±0.008)	1.6±0.2 (0.063±0.008)	1.6±0.2 (0.063±0.008)	1.2 (0.047)	0.8 (0.031)	0.4 (0.016)	0.10±0.10 (0.004±0.004)	0.4 (0.016)	0.4 (0.016)	0.13 (0.005)	1.2 (0.047)	1.1 (0.043)	1.3 (0.051)	58.97
B	3528–21	3.5±0.2 (0.138±0.008)	2.8±0.2 (0.110±0.008)	1.9±0.2 (0.075±0.008)	2.2 (0.087)	0.8 (0.031)	0.4 (0.016)	0.10±0.10 (0.004±0.004)	0.5 (0.020)	1.0 (0.039)	0.13 (0.005)	1.9 (0.075)	1.8 (0.071)	2.2 (0.087)	102.3
C	6032–28	6.0±0.3 (0.236±0.012)	3.2±0.3 (0.126±0.012)	2.5±0.3 (0.098±0.012)	2.2 (0.087)	1.3 (0.051)	0.5 (0.020)	0.10±0.10 (0.004±0.004)	0.9 (0.035)	1.0 (0.039)	0.13 (0.005)	3.1 (0.122)	2.8 (0.110)	2.4 (0.094)	224.2
D	7343–31	7.3±0.3 (0.287±0.012)	4.3±0.3 (0.169±0.012)	2.8±0.3 (0.110±0.012)	2.4 (0.094)	1.3 (0.051)	0.5 (0.020)	0.10±0.10 (0.004±0.004)	0.9 (0.035)	1.0 (0.039)	0.13 (0.005)	3.8 (0.150)	3.5 (0.138)	3.5 (0.138)	412.33
X	7343–43	7.3±0.3 (0.287±0.012)	4.3±0.3 (0.169±0.012)	4.0±0.3 (0.157±0.012)	2.4 (0.094)	1.3 (0.051)	0.5 (0.020)	0.10±0.10 (0.004±0.004)	1.7 (0.067)	1.0 (0.039)	0.13 (0.005)	3.8 (0.150)	3.5 (0.138)	3.5 (0.138)	652.04
E	7360–38	7.3±0.3 (0.287±0.012)	6.0±0.3 (0.236±0.012)	3.6±0.2 (0.142±0.008)	3.1 (0.120)	1.3 (0.051)	0.5 (0.020)	0.10±0.10 (0.004±0.004)	N/A	N/A	0.13 (0.005)	3.8 (0.150)	3.5 (0.138)	3.5 (0.138)	803.76

Notes: (Ref) – Dimensions provided for reference only. For low profile cases, no dimensions are provided for B, P or R because these cases do not have a bevel or a notch.

These weights are provided as reference. If exact weights are needed, please contact your KEMET Sales Representative

Downloaded from Arrow.com.

Dimensions – Millimeters (Inches) DLA Drawing 07016

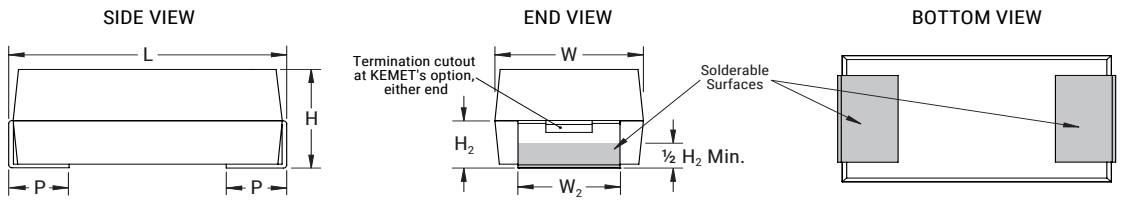

Case Size	Component					Typical Weight
KEMET	H	L	P ±0.3 (0.012)	W	W_2 ±0.1 (0.004)	(mg)
A	1.6±0.2 (0.063±0.008)	3.2±0.2 (0.126±0.008)	0.8 (0.031)	1.6±0.2 (0.063±0.008)	1.2 (0.047)	58.97
B	1.9±0.2 (0.075±0.008)	3.5±0.2 (0.138±0.008)	0.8 (0.031)	2.8±0.2 (0.110±0.008)	2.2 (0.087)	102.3
C	2.5±0.3 (0.098±0.012)	6.0±0.3 (0.236±0.012)	1.3 (0.051)	3.2±0.3 (0.126±0.012)	2.2 (0.087)	224.2
D	2.8±0.3 (0.110±0.012)	7.3±0.3 (0.287±0.012)	1.3 (0.051)	4.3±0.3 (0.169±0.012)	2.4 (0.094)	412.33
X	4.0±0.3 (0.157±0.012)	7.3±0.3 (0.287±0.012)	1.3 (0.051)	4.3±0.3 (0.169±0.012)	2.4 (0.094)	652.04
E	3.6±0.2 (0.142±0.008)	7.3±0.3 (0.287±0.012)	1.3 (0.051)	6.0±0.3 (0.236±0.012)	3.1 (0.120)*	803.76

** Previously, KEMET'S "W_2" dimension was 4.10 (0.161) for the "E" case.*
These weights are provided as reference. If exact weights are needed, please contact your KEMET Sales Representative

Downloaded from Arrow.com.

Table 1A – Ratings & Part Number Reference

Rated Voltage	Rated Cap	Case Code/ Case Size	KEMET Part Number	DC Leakage	DF	Standard ESR	Low ESR	Ultra-low ESR	Ripple Current STD ESR (rms)	Ripple Current Low ESR (rms)	Ripple Current Ultra-low ESR (rms)	Maximum Operating Temp	MSL
VDC at 85°C	µF	KEMET/EIA	(See below for part options)	µA at +25°C Maximum/ 5 Minutes	% at +25°C 120 Hz Maximum	Ω at 25°C 100 kHz Maximum	Ω at 25°C 100 kHz Maximum	Ω at 25°C 100 kHz Maximum	mA at +25°C 100 kHz	mA at +25°C 100 kHz	mA at +25°C 100 kHz	°C	Reflow Temp ≤ 260°C
4	2.2	A/3216-18	T493A225(1)004(2)(3)(4)(5)	0.5	6.0	8.0	6.0	N/A	97	112	N/A	125	1
4	3.3	A/3216-18	T493A335(1)004(2)(3)(4)(5)	0.5	6.0	8.0	4.0	N/A	97	137	N/A	125	1
4	4.7	A/3216-18	T493A475(1)004(2)(3)(4)(5)	0.5	6.0	8.0	3.5	N/A	97	146	N/A	125	1
4	6.8	A/3216-18	T493A685(1)004(2)(3)(4)(5)	0.5	6.0	6.0	3.0	N/A	112	158	N/A	125	1
4	6.8	B/3528-21	T493B685(1)004(2)(3)(4)(5)	0.5	6.0	5.5	2.0	N/A	124	194	N/A	125	1
4	10	A/3216-18	T493A106(1)004(2)(3)(4)(5)	0.5	6.0	6.0	2.0	N/A	112	194	N/A	125	1
4	10	B/3528-21	T493B106(1)004(2)(3)(4)(5)	0.5	6.0	3.5	1.2	N/A	156	250	N/A	125	1
4	15	A/3216-18	T493A156(1)004(2)(3)(4)(5)	0.6	6.0	4.0	1.5	N/A	137	223	N/A	125	1
4	15	B/3528-21	T493B156(1)004(2)(3)(4)(5)	0.6	6.0	3.5	1.2	N/A	156	250	N/A	125	1
4	22	A/3216-18	T493A226(1)004(2)(3)(4)(5)	0.9	6.0	4.0	1.5	N/A	137	223	N/A	125	1
4	22	B/3528-21	T493B226(1)004(2)(3)(4)(5)	0.9	6.0	3.5	0.6	N/A	156	354	N/A	125	1
4	22	C/6032-28	T493C226(1)004(2)(3)(4)(5)	0.9	6.0	1.8	0.5	N/A	247	469	N/A	125	1
4	33	A/3216-18	T493A336(1)004(2)(3)(4)(5)	1.3	6.0	4.0	3.0	N/A	137	158	N/A	125	1
4	33	B/3528-21	T493B336(1)004(2)(3)(4)(5)	1.3	6.0	3.5	0.5	N/A	156	387	N/A	125	1
4	33	C/6032-28	T493C336(1)004(2)(3)(4)(5)	1.3	6.0	1.8	0.5	N/A	247	469	N/A	125	1
4	47	B/3528-21	T493B476(1)004(2)(3)(4)(5)	1.9	6.0	3.0	0.5	N/A	158	387	N/A	125	1
4	47	C/6032-28	T493C476(1)004(2)(3)(4)(5)	1.9	6.0	1.8	0.5	N/A	247	469	N/A	125	1
4	68	B/3528-21	T493B686(1)004(2)(3)(4)(5)	2.7	6.0	3.5	2.0	N/A	156	194	N/A	125	1
4	68	C/6032-28	T493C686(1)004(2)(3)(4)(5)	2.7	6.0	1.6	0.25	N/A	262	663	N/A	125	1
4	68	D/7343-31	T493D686(1)004(2)(3)(4)(5)	2.7	6.0	0.8	0.2	N/A	433	866	N/A	125	1
4	100	A/3216-18	T493A107(1)004(2)(3)(4)(5)	4	30.0	1.4	N/A	N/A	231	N/A	N/A	125	1
4	100	B/3528-21	T493B107(1)004(2)(3)(4)(5)	4	8.0	1.0	0.7	0.50	274	327	387	125	1
4	100	C/6032-28	T493C107(1)004(2)(3)(4)(5)	4	8.0	1.2	0.2	N/A	303	742	N/A	125	1
4	100	D/7343-31	T493D107(1)004(2)(3)(4)(5)	4	8.0	0.8	0.2	N/A	433	866	N/A	125	1
4	150	C/6032-28	T493C157(1)004(2)(3)(4)(5)	6	8.0	1.2	0.3	0.25	303	606	663	125	1
4	150	D/7343-31	T493D157(1)004(2)(3)(4)(5)	6	8.0	0.8	0.15	N/A	433	1000	N/A	125	1
4	220	D/7343-31	T493D227(1)004(2)(3)(4)(5)	8.8	8.0	0.9	0.7	N/A	408	463	N/A	125	1
4	330	D/7343-31	T493D337(1)004(2)(3)(4)(5)	13.2	8.0	0.7	0.15	N/A	463	1000	N/A	125	1
4	330	X/7343-43	T493X337(1)004(2)(3)(4)(5)	13.2	8.0	0.5	0.2	N/A	574	908	N/A	125	1
6.3	1.5	A/3216-18	T493A155(1)006(2)(3)(4(5)	0.5	6.0	8.0	6.0	N/A	97	112	N/A	125	1
6.3	2.2	A/3216-18	T493A225(1)006(2)(3)(4)(5)	0.5	6.0	8.0	6.0	N/A	97	112	N/A	125	1
6.3	3.3	A/3216-18	T493A335(1)006(2)(3)(4)(5)	0.5	6.0	8.0	6.0	N/A	97	112	N/A	125	1
6.3	4.7	A/3216-18	T493A475(1)006(2)(3)(4)(5)	0.5	6.0	6.0	3.5	N/A	112	146	N/A	125	1
6.3	4.7	B/3528-21	T493B475(1)006(2)(3)(4)(5)	0.5	6.0	5.5	3.5	N/A	124	194	N/A	125	1
6.3	6.8	A/3216-18	T493A685(1)006(2)(3)(4)(5)	0.5	6.0	6.0	2.0	N/A	112	194	N/A	125	1
6.3	6.8	B/3528-21	T493B685(1)006(2)(3)(4)(5)	0.5	6.0	3.5	1.2	N/A	156	250	N/A	125	1
6.3	10	A/3216-18	T493A106(1)006(2)(3)(4)(5)	0.6	6.0	4.0	2.0	N/A	137	194	N/A	125	1
6.3	10	B/3528-21	T493B106(1)006(2)(3)(4)(5)	0.6	6.0	3.5	1.0	N/A	156	274	N/A	125	1
6.3	15	A/3216-18	T493A156(1)006(2)(3)(4)(5)	0.9	6.0	4.0	1.5	N/A	137	223	N/A	125	1
6.3	15	B/3528-21	T493B156(1)006(2)(3)(4)(5)	0.9	6.0	3.5	0.7	N/A	156	327	N/A	125	1
6.3	15	C/6032-28	T493C156(1)006(2)(3)(4)(5)	0.9	6.0	1.8	0.6	N/A	247	428	N/A	125	1
6.3	22	A/3216-18	T493A226(1)006(2)(3)(4)(5)	1.4	6.0	4.0	3.0	N/A	137	158	N/A	125	1
6.3	22	B/3528-21	T493B226(1)006(2)(3)(4)(5)	1.4	6.0	3.5	0.6	N/A	156	354	N/A	125	1
6.3	22	C/6032-28	T493C226(1)006(2)(3)(4)(5)	1.4	6.0	1.8	0.5	N/A	247	469	N/A	125	1
6.3	33	B/3528-21	T493B336(1)006(2)(3)(4)(5)	2.1	6.0	3.0	0.6	N/A	158	354	N/A	125	1
VDC at 85°C	µF	KEMET/EIA	(See below for part options)	µA at +25°C Maximum/ 5 Minutes	% at +25°C 120 Hz Maximum	Ω at 25°C 100 kHz Maximum	Ω at 25°C 100 kHz Maximum	Ω at 25°C 100 kHz Maximum	mA at +25°C 100 kHz	mA at +25°C 100 kHz	mA at +25°C 100 kHz	°C	Reflow Temp ≤ 260°C
Rated Voltage	Rated Cap	Case Code/ Case Size	KEMET Part Number	DC Leakage	DF	Standard ESR	Low ESR	Ultra-low ESR	Ripple Current STD ESR (rms)	Ripple Current Low ESR (rms)	Ripple Current Ultra-low ESR (rms)	Maximum Operating Temp	MSL

(1) To complete KEMET part number, insert M for ± 20%, K for ± 10% or J for 5%. Designates Capacitance tolerance.
(2) To complete KEMET part number, insert B (0.1%/1,000 Hours), C (0.01%/1,000 Hours) or A = N/A. Designates Reliability Level.
(3) To complete KEMET part number, insert B = Gold Plated, C = Hot solder dipped, H = Solder Plated, K = Solder Fused or T = 100% Tin (Sn). Designates Termination Finish.
(4) To complete KEMET part number, insert 61, 62, 63, 64 or 6(X)11, 6(X)12, 6(X)13, 6(X)21, 6(X)22, 6(X)23, 6(X)31, 6(X)32, 6(X)33. Designates screening options.
(5) To complete KEMET part number, insert 10 = Standard ESR, 20 = Low ESR or 30 = Ultra Low ESR. Designates ESR option.
Refer to Ordering Information for additional detail.

Downloaded from Arrow.com.

Table 1A – Ratings & Part Number Reference cont.

Rated Voltage	Rated Cap	Case Code/ Case Size	KEMET Part Number	DC Leakage	DF	Standard ESR	Low ESR	Ultra-low ESR	Ripple Current STD ESR (rms)	Ripple Current Low ESR (rms)	Ripple Current Ultra-low ESR (rms)	Maximum Operating Temp	MSL
VDC at 85°C	µF	KEMET/EIA	(See below for part options)	µA at +25°C Maximum/ 5 Minutes	% at +25°C 120 Hz Maximum	Ω at 25°C 100 kHz Maximum	Ω at 25°C 100 kHz Maximum	Ω at 25°C 100 kHz Maximum	mA at +25°C 100 kHz	mA at +25°C 100 kHz	mA at +25°C 100 kHz	°C	Reflow Temp ≤ 260°C
6.3	33	C/6032-28	T493C336(1)006(2)(3)(4)(5)	2.1	6.0	1.8	0.3	N/A	247	606	N/A	125	1
6.3	47	B/3528-21	T493B476(1)006(2)(3)(4)(5)	3.0	6.0	3.5	2.0	N/A	156	194	N/A	125	1
6.3	47	C/6032-28	T493C476(1)006(2)(3)(4)(5)	3.0	6.0	1.6	0.25	N/A	262	663	N/A	125	1
6.3	47	D/7343-31	T493D476(1)006(2)(3)(4)(5)	3.0	6.0	0.8	0.22	N/A	433	826	N/A	125	1
6.3	68	B/3528-21	T493B686(1)006(2)(3)(4)(5)	4.3	8.0	1.0	0.65	N/A	274	340	N/A	125	1
6.3	68	C/6032-28	T493C686(1)006(2)(3)(4)(5)	4.3	6.0	1.2	0.2	N/A	303	742	N/A	125	1
6.3	68	D/7343-31	T493D686(1)006(2)(3)(4)(5)	4.3	6.0	0.8	0.2	0.18	433	866	913	125	1
6.3	100	B/3528-21	T493B107(1)006(2)(3)(4)(5)	6.3	15.0	10.0	8.0	0.70	87	97	327	125	1
6.3	100	C/6032-28	T493C107(1)006(2)(3)(4)(5)	6.3	8.0	1.2	0.3	0.15	303	606	856	125	1
6.3	100	D/7343-31	T493D107(1)006(2)(3)(4)(5)	6.3	8.0	0.8	0.15	N/A	433	1000	N/A	125	1
6.3	150	C/6032-28	T493C157(1)006(2)(3)(4)(5)	9.5	8.0	1.2	0.3	0.20	303	606	742	125	1
6.3	150	D/7343-31	T493D157(1)006(2)(3)(4)(5)	9.5	8.0	0.7	0.15	N/A	463	1000	N/A	125	1
6.3	220	C/6032-28	T493C227(1)006(2)(3)(4)(5)	13.9	10.0	1.2	0.3	0.23	303	606	692	125	1
6.3	220	D/7343-31	T493D227(1)006(2)(3)(4)(5)	13.9	8.0	0.7	0.1	0.10	463	1225	1225	125	1
6.3	220	X/7343-43	T493X227(1)006(2)(3)(4)(5)	13.9	8.0	0.7	0.15	0.07	485	1049	1535	125	1
6.3	330	D/7343-31	T493D337(1)006(2)(3)(4)(5)	20.8	8.0	0.5	0.15	0.10	548	1000	1225	125	1
6.3	330	X/7343-43	T493X337(1)006(2)(3)(4)(5)	20.8	8.0	0.5	0.1	0.07	574	1285	1535	125	1
6.3	470	X/7343-43	T493X477(1)006(2)(3)(4)(5)	29.6	10.0	0.2	0.1	0.05	908	1285	1817	125	1
8	680	E/7360-38	T493E687M008(2)(3)(4)10	54.4	12.0	0.045	N/A	N/A	2100	N/A	N/A	125	1
10	1	A/3216-18	T493A105(1)010(2)(3)(4)(5)	0.5	4.0	10.0	6.0	N/A	87	112	N/A	125	1
10	1.5	A/3216-18	T493A155(1)010(2)(3)(4)(5)	0.5	6.0	8.0	6.0	N/A	97	112	N/A	125	1
10	2.2	A/3216-18	T493A225(1)010(2)(3)(4)(5)	0.5	6.0	8.0	6.0	N/A	97	112	N/A	125	1
10	3.3	A/3216-18	T493A335(1)010(2)(3)(4)(5)	0.5	6.0	6.0	4.0	N/A	112	137	N/A	125	1
10	3.3	B/3528-21	T493B335(1)010(2)(3)(4)(5)	0.5	6.0	5.5	3.5	N/A	124	156	N/A	125	1
10	4.7	A/3216-18	T493A475(1)010(2)(3)(4)(5)	0.5	6.0	6.0	3.0	N/A	112	158	N/A	125	1
10	4.7	B/3528-21	T493B475(1)010(2)(3)(4)(5)	0.5	6.0	3.5	1.5	1.3	156	224	240	125	1
10	6.8	A/3216-18	T493A685(1)010(2)(3)(4)(5)	0.7	6.0	6.0	3.0	N/A	112	158	N/A	125	1
10	6.8	B/3528-21	T493B685(1)010(2)(3)(4)(5)	0.7	6.0	3.5	1.2	0.90	156	250	289	125	1
10	10	A/3216-18	T493A106(1)010(2)(3)(4)(5)	1	6.0	4.0	1.8	N/A	137	204	N/A	125	1
10	10	B/3528-21	T493B106(1)010(2)(3)(4)(5)	1	6.0	3.5	0.8	0.75	156	306	316	125	1
10	10	C/6032-28	T493C106(1)010(2)(3)(4)(5)	1	6.0	1.8	0.6	N/A	247	428	N/A	125	1
10	15	A/3216-18	T493A156(1)010(2)(3)(4)(5)	1.5	8.0	6.0	4.0	3.2	112	137	153	125	1
10	15	B/3528-21	T493B156(1)010(2)(3)(4)(5)	1.5	6.0	3.5	0.7	N/A	156	327	N/A	125	1
10	15	C/6032-28	T493C156(1)010(2)(3)(4)(5)	1.5	6.0	1.8	0.5	0.48	247	469	479	125	1
10	22	B/3528-21	T493B226(1)010(2)(3)(4)(5)	2.2	6.0	3.0	0.7	N/A	158	327	N/A	125	1
10	22	C/6032-28	T493C226(1)010(2)(3)(4)(5)	2.2	6.0	1.8	0.4	0.29	247	524	616	125	1
10	33	B/3528-21	T493B336(1)010(2)(3)(4)(5)	3.3	6.0	3.5	2.0	N/A	156	194	N/A	125	1
10	33	C/6032-28	T493C336(1)010(2)(3)(4)(5)	3.3	6.0	1.6	0.3	N/A	262	606	N/A	125	1
10	33	D/7343-31	T493D336(1)010(2)(3)(4)(5)	3.3	6.0	0.8	0.3	N/A	433	707	N/A	125	1
10	47	C/6032-28	T493C476(1)010(2)(3)(4)(5)	4.7	6.0	1.2	0.3	N/A	303	606	N/A	125	1
10	47	D/7343-31	T493D476(1)010(2)(3)(4)(5)	4.7	6.0	0.8	0.2	0.08	433	866	1369	125	1
10	68	C/6032-28	T493C686(1)010(2)(3)(4)(5)	6.8	6.0	1.2	0.3	0.23	303	606	692	125	1
10	68	D/7343-31	T493D686(1)010(2)(3)(4)(5)	6.8	6.0	0.8	0.2	0.09	433	866	1290	125	1
10	68	X/7343-43	T493X686(1)010(2)(3)(4)(5)	6.8	4.0	0.5	0.15	N/A	574	1049	N/A	125	1
10	100	C/6032-28	T493C107(1)010(2)(3)(4)(5)	10	8.0	1.2	0.3	N/A	303	606	N/A	125	1
VDC at 85°C	µF	KEMET/EIA	(See below for part options)	µA at +25°C Maximum/ 5 Minutes	% at +25°C 120 Hz Maximum	Ω at 25°C 100 kHz Maximum	Ω at 25°C 100 kHz Maximum	Ω at 25°C 100 kHz Maximum	mA at +25°C 100 kHz	mA at +25°C 100 kHz	mA at +25°C 100 kHz	°C	Reflow Temp ≤ 260°C
Rated Voltage	Rated Cap	Case Code/ Case Size	KEMET Part Number	DC Leakage	DF	Standard ESR	Low ESR	Ultra-low ESR	Ripple Current STD ESR (rms)	Ripple Current Low ESR (rms)	Ripple Current Ultra-low ESR (rms)	Maximum Operating Temp	MSL

(1) To complete KEMET part number, insert M for ± 20%, K for ± 10% or J for 5%. Designates Capacitance tolerance.
(2) To complete KEMET part number, insert B (0.1%/1,000 Hours), C (0.01%/1,000 Hours) or A = N/A. Designates Reliability Level.
(3) To complete KEMET part number, insert B = Gold Plated, C = Hot solder dipped, H = Solder Plated, K = Solder Fused or T = 100% Tin (Sn). Designates Termination Finish.
(4) To complete KEMET part number, insert 61, 62, 63, 64 or 6(X)11, 6(X)12, 6(X)13, 6(X)21, 6(X)22, 6(X)23, 6(X)31, 6(X)32, 6(X)33. Designates screening options.
(5) To complete KEMET part number, insert 10 = Standard ESR, 20 = Low ESR or 30 = Ultra Low ESR. Designates ESR option.
Refer to Ordering Information for additional detail.

Downloaded from Arrow.com.

Table 1A – Ratings & Part Number Reference cont.

Rated Voltage	Rated Cap	Case Code/ Case Size	KEMET Part Number	DC Leakage	DF	Standard ESR	Low ESR	Ultra-low ESR	Ripple Current STD ESR (rms)	Ripple Current Low ESR (rms)	Ripple Current Ultra-low ESR (rms)	Maximum Operating Temp	MSL
VDC at 85°C	µF	KEMET/EIA	(See below for part options)	µA at +25°C Maximum/ 5 Minutes	% at +25°C 120 Hz Maximum	Ω at 25°C 100 kHz Maximum	Ω at 25°C 100 kHz Maximum	Ω at 25°C 100 kHz Maximum	mA at +25°C 100 kHz	mA at +25°C 100 kHz	mA at +25°C 100 kHz	°C	Reflow Temp ≤ 260°C
10	100	D/7343-31	T493D107(1)010(2)(3)(4)(5)	10	8.0	0.7	0.1	0.08	463	1225	1369	125	1
10	150	D/7343-31	T493D157(1)010(2)(3)(4)(5)	15	8.0	0.7	0.1	0.08	463	1225	1369	125	1
10	150	X/7343-43	T493X157(1)010(2)(3)(4)(5)	15	8.0	0.7	0.2	0.09	485	908	1354	125	1
10	220	D/7343-31	T493D227(1)010(2)(3)(4)(5)	22	8.0	0.5	0.2	0.08	548	866	1369	125	1
10	220	X/7343-43	T493X227(1)010(2)(3)(4)(5)	22	8.0	0.5	0.1	0.05	574	1285	1817	125	1
10	330	X/7343-43	T493X337(1)010(2)(3)(4)(5)	33	10.0	0.5	0.1	0.05	574	1285	1817	125	1
10	470	X/7343-43	T493X477(1)010(2)(3)(4)(5)	47	10.0	0.2	0.05	N/A	908	1817	N/A	125	1
16	0.68	A/3216-18	T493A684(1)016(2)(3)(4)(5)	0.5	6.0	12.0	8.0	N/A	79	97	N/A	125	1
16	1	A/3216-18	T493A105(1)016(2)(3)(4)(5)	0.5	4.0	10.0	6.0	N/A	87	112	N/A	125	1
16	1.5	A/3216-18	T493A155(1)016(2)(3)(4)(5)	0.5	6.0	8.0	6.0	N/A	97	112	N/A	125	1
16	2.2	A/3216-18	T493A225(1)016(2)(3)(4)(5)	0.5	6.0	6.0	4.0	N/A	112	137	N/A	125	1
16	3.3	A/3216-18	T493A335(1)016(2)(3)(4)(5)	0.5	6.0	6.0	3.5	N/A	112	146	N/A	125	1
16	3.3	B/3528-21	T493B335(1)016(2)(3)(4)(5)	0.5	6.0	3.5	2.0	N/A	156	194	N/A	125	1
16	4.7	A/3216-18	T493A475(1)016(2)(3)(4)(5)	0.8	6.0	6.0	3.0	N/A	112	158	N/A	125	1
16	4.7	B/3528-21	T493B475(1)016(2)(3)(4)(5)	0.8	6.0	3.5	1.5	N/A	156	224	N/A	125	1
16	6.8	A/3216-18	T493A685(1)016(2)(3)(4)(5)	1.1	6.0	7.0	3.0	N/A	103	158	N/A	125	1
16	6.8	B/3528-21	T493B685(1)016(2)(3)(4)(5)	1.1	6.0	3.5	1.2	N/A	156	250	N/A	125	1
16	6.8	C/6032-28	T493C685(1)016(2)(3)(4)(5)	1.1	6.0	1.9	0.8	0.75	240	370	383	125	1
16	10	A/3216-18	T493A106(1)016(2)(3)(4)(5)	1.6	6.0	3.0	N/A	N/A	158	N/A	N/A	125	1
16	10	B/3528-21	T493B106(1)016(2)(3)(4)(5)	1.6	6.0	3.5	0.8	N/A	156	306	N/A	125	1
16	10	C/6032-28	T493C106(1)016(2)(3)(4)(5)	1.6	6.0	1.8	0.6	N/A	247	428	N/A	125	1
16	15	B/3528-21	T493B156(1)016(2)(3)(4)(5)	2.4	6.0	3.0	0.8	N/A	158	306	N/A	125	1
16	15	C/6032-28	T493C156(1)016(2)(3)(4)(5)	2.4	6.0	1.8	0.4	N/A	247	524	N/A	125	1
16	22	B/3528-21	T493B226(1)016(2)(3)(4)(5)	3.5	6.0	2.2	0.8	0.6	185	306	N/A	125	1
16	22	C/6032-28	T493C226(1)016(2)(3)(4)(5)	3.5	6.0	1.6	0.4	N/A	262	524	N/A	125	1
16	22	D/7343-31	T493D226(1)016(2)(3)(4)(5)	3.5	6.0	0.8	0.3	N/A	433	775	N/A	125	1
16	33	C/6032-28	T493C336(1)016(2)(3)(4)(5)	5.3	6.0	1.2	0.3	0.23	303	606	692	125	1
16	33	D/7343-31	T493D336(1)016(2)(3)(4)(5)	5.3	6.0	0.8	0.25	0.15	433	775	1000	125	1
16	47	C/6032-28	T493C476(1)016(2)(3)(4)(5)	7.5	6.0	1.2	0.5	0.35	303	469	560	125	1
16	47	D/7343-31	T493D476(1)016(2)(3)(4)(5)	7.5	6.0	0.8	0.2	0.10	433	866	1225	125	1
16	68	D/7343-31	T493D686(1)016(2)(3)(4)(5)	10.9	6.0	0.7	0.2	0.15	463	866	1000	125	1
16	100	D/7343-31	T493D107(1)016(2)(3)(4)(5)	16	8.0	0.7	0.125	0.10	463	1095	1225	125	1
16	100	X/7343-43	T493X107(1)016(2)(3)(4)(5)	16	8.0	0.7	0.1	0.08	485	1285	1436	125	1
16	150	D/7343-31	T493D157(1)016(2)(3)(4)(5)	24	8.0	0.7	0.4	0.15	463	612	1000	125	1
16	150	X/7343-43	T493X157(1)016(2)(3)(4)(5)	24	8.0	0.5	0.2	0.10	574	908	1285	125	1
16	220	X/7343-43	T493X227(1)016(2)(3)(4)(5)	35.2	12.0	0.5	0.2	0.10	574	908	1285	125	1
20	0.47	A/3216-18	T493A474(1)020(2)(3)(4)(5)	0.5	4.0	14.0	9.0	N/A	73	91	N/A	125	1
20	0.68	A/3216-18	T493A684(1)020(2)(3)(4)(5)	0.5	4.0	12.0	8.0	N/A	79	97	N/A	125	1
20	1	A/3216-18	T493A105(1)020(2)(3)(4)(5)	0.5	4.0	10.0	5.5	N/A	87	117	N/A	125	1
20	1.5	A/3216-18	T493A155(1)020(2)(3)(4)(5)	0.5	6.0	8.0	4.5	N/A	97	129	N/A	125	1
20	1.5	B/3528-21	T493B155(1)020(2)(3)(4)(5)	0.5	6.0	6.0	4.0	N/A	112	548	N/A	125	1
20	2.2	A/3216-18	T493A225(1)020(2)(3)(4)(5)	0.5	6.0	7.0	4.0	N/A	103	137	N/A	125	1
20	2.2	B/3528-21	T493B225(1)020(2)(3)(4)(5)	0.5	6.0	3.5	1.5	N/A	156	224	N/A	125	1
20	3.3	A/3216-18	T493A335(1)020(2)(3)(4)(5)	0.7	6.0	7.0	4.0	N/A	103	137	N/A	125	1
20	3.3	B/3528-21	T493B335(1)020(2)(3)(4)(5)	0.7	6.0	3.5	1.3	N/A	156	240	N/A	125	1
VDC at 85°C	µF	KEMET/EIA	(See below for part options)	µA at +25°C Maximum/ 5 Minutes	% at +25°C 120 Hz Maximum	Ω at 25°C 100 kHz Maximum	Ω at 25°C 100 kHz Maximum	Ω at 25°C 100 kHz Maximum	mA at +25°C 100 kHz	mA at +25°C 100 kHz	mA at +25°C 100 kHz	°C	Reflow Temp ≤ 260°C
Rated Voltage	Rated Cap	Case Code/ Case Size	KEMET Part Number	DC Leakage	DF	Standard ESR	Low ESR	Ultra-low ESR	Ripple Current STD ESR (rms)	Ripple Current Low ESR (rms)	Ripple Current Ultra-low ESR (rms)	Maximum Operating Temp	MSL

(1) To complete KEMET part number, insert M for ± 20%, K for ± 10% or J for 5%. Designates Capacitance tolerance.
(2) To complete KEMET part number, insert B (0.1%/1,000 Hours), C (0.01%/1,000 Hours) or A = N/A. Designates Reliability Level.
(3) To complete KEMET part number, insert B = Gold Plated, C = Hot solder dipped, H = Solder Plated, K = Solder Fused or T = 100% Tin (Sn). Designates Termination Finish.
(4) To complete KEMET part number, insert 61, 62, 63, 64 or 6(X)11, 6(X)12, 6(X)13, 6(X)21, 6(X)22, 6(X)23, 6(X)31, 6(X)32, 6(X)33. Designates screening options.
(5) To complete KEMET part number, insert 10 = Standard ESR, 20 = Low ESR or 30 = Ultra Low ESR. Designates ESR option.
Refer to Ordering Information for additional detail.

Downloaded from Arrow.com.

Table 1A – Ratings & Part Number Reference cont.

Rated Voltage	Rated Cap	Case Code/ Case Size	KEMET Part Number	DC Leakage	DF	Standard ESR	Low ESR	Ultra-low ESR	Ripple Current STD ESR (rms)	Ripple Current Low ESR (rms)	Ripple Current Ultra-low ESR (rms)	Maximum Operating Temp	MSL
VDC at 85°C	µF	KEMET/EIA	(See below for part options)	µA at +25°C Maximum/ 5 Minutes	% at +25°C 120 Hz Maximum	Ω at 25°C 100 kHz Maximum	Ω at 25°C 100 kHz Maximum	Ω at 25°C 100 kHz Maximum	mA at +25°C 100 kHz	mA at +25°C 100 kHz	mA at +25°C 100 kHz	°C	Reflow Temp ≤ 260°C
20	4.7	A/3216-18	T493A475(1)020(2)(3)(4)(5)	0.9	8.0	6.0	1.8	N/A	112	204	N/A	125	1
20	4.7	B/3528-21	T493B475(1)020(2)(3)(4)(5)	0.9	6.0	3.5	1.0	N/A	156	274	N/A	125	1
20	4.7	C/6032-28	T493C475(1)020(2)(3)(4)(5)	0.9	6.0	2.4	0.6	N/A	214	428	N/A	125	1
20	6.8	B/3528-21	T493B685(1)020(2)(3)(4)(5)	1.4	6.0	3.5	1.0	N/A	156	274	N/A	125	1
20	6.8	C/6032-28	T493C685(1)020(2)(3)(4)(5)	1.4	6.0	1.9	0.6	N/A	240	428	N/A	125	1
20	10	B/3528-21	T493B106(1)020(2)(3)(4)(5)	2	6.0	3.0	1.0	N/A	158	274	N/A	125	1
20	10	C/6032-28	T493C106(1)020(2)(3)(4)(5)	2	6.0	1.8	0.5	0.48	247	469	479	125	1
20	15	C/6032-28	T493C156(1)020(2)(3)(4)(5)	3	6.0	1.7	0.4	0.38	254	524	538	125	1
20	15	D/7343-31	T493D156(1)020(2)(3)(4)(5)	3	6.0	1.0	0.35	0.28	332	655	732	125	1
20	22	C/6032-28	T493C226(1)020(2)(3)(4)(5)	4.4	6.0	1.2	0.4	N/A	303	524	N/A	125	1
20	22	D/7343-31	T493D226(1)020(2)(3)(4)(5)	4.4	6.0	0.8	0.3	0.18	433	707	913	125	1
20	33	D/7343-31	T493D336(1)020(2)(3)(4)(5)	6.6	6.0	0.8	0.2	0.15	433	866	1000	125	1
20	47	D/7343-31	T493D476(1)020(2)(3)(4)(5)	9.4	6.0	0.7	0.2	0.10	463	866	1225	125	1
20	47	X/7343-43	T493X476(1)020(2)(3)(4)(5)	9.4	4.0	0.7	0.15	0.10	485	1049	1285	125	1
20	68	D/7343-31	T493D686(1)020(2)(3)(4)(5)	13.6	8.0	0.7	0.2	0.15	463	866	1000	125	1
20	68	X/7343-43	T493X686(1)020(2)(3)(4)(5)	13.6	6.0	0.7	0.15	0.12	485	1049	1173	125	1
25	0.33	A/3216-18	T493A334(1)025(2)(3)(4)(5)	0.5	4.0	15.0	10.0	N/A	71	87	N/A	125	1
25	0.47	A/3216-18	T493A474(1)025(2)(3)(4)(5)	0.5	4.0	14.0	9.0	N/A	73	91	N/A	125	1
25	0.68	A/3216-18	T493A684(1)025(2)(3)(4)(5)	0.5	4.0	10.0	6.0	N/A	87	112	N/A	125	1
25	0.68	B/3528-21	T493B684(1)025(2)(3)(4)(5)	0.5	4.0	7.5	5.5	N/A	100	124	N/A	125	1
25	1	A/3216-18	T493A105(1)025(2)(3)(4)(5)	0.5	4.0	8.0	4.0	N/A	97	137	N/A	125	1
25	1	B/3528-21	T493B105(1)025(2)(3)(4)(5)	0.5	4.0	5.0	2.0	N/A	122	194	N/A	125	1
25	1.5	A/3216-18	T493A155(1)025(2)(3)(4)(5)	0.5	6.0	10.0	3.0	N/A	87	158	N/A	125	1
25	1.5	B/3528-21	T493B155(1)025(2)(3)(4)(5)	0.5	6.0	5.0	1.5	N/A	122	224	N/A	125	1
25	2.2	A/3216-18	T493A225(1)025(2)(3)(4)(5)	0.6	6.0	7.0	N/A	N/A	103	N/A	N/A	125	1
25	2.2	B/3528-21	T493B225(1)025(2)(3)(4)(5)	0.6	6.0	4.5	1.2	N/A	129	250	N/A	125	1
25	2.2	C/6032-28	T493C225(1)025(2)(3)(4)(5)	0.6	6.0	3.5	2.2	1.30	177	224	290	125	1
25	3.3	B/3528-21	T493B335(1)025(2)(3)(4)(5)	0.8	6.0	3.5	2.0	N/A	156	194	N/A	125	1
25	3.3	C/6032-28	T493C335(1)025(2)(3)(4)(5)	0.8	6.0	2.5	1.2	0.75	210	303	383	125	1
25	4.7	A/3216-18	T493A475(1)025(2)(3)(4)(5)	1.2	6.0	3.1	N/A	N/A	155	N/A	N/A	125	1
25	4.7	B/3528-21	T493B475(1)025(2)(3)(4)(5)	1.2	6.0	1.5	1.0	N/A	224	274	N/A	125	1
25	4.7	C/6032-28	T493C475(1)025(2)(3)(4)(5)	1.2	6.0	2.4	0.6	0.58	214	428	435	125	1
25	6.8	B/3528-21	T493B685(1)025(2)(3)(4)(5)	1.7	6.0	2.8	0.7	N/A	164	327	N/A	125	1
25	6.8	C/6032-28	T493C685(1)025(2)(3)(4)(5)	1.7	6.0	1.9	0.6	0.49	240	428	474	125	1
25	6.8	D/7343-31	T493D685(1)025(2)(3)(4)(5)	1.7	6.0	1.4	1.0	N/A	327	332	N/A	125	1
25	10	C/6032-28	T493C106(1)025(2)(3)(4)(5)	2.5	6.0	1.5	0.5	0.45	270	469	494	125	1
25	10	D/7343-31	T493D106(1)025(2)(3)(4)(5)	2.5	6.0	1.0	0.4	N/A	332	612	N/A	125	1
25	15	C/6032-28	T493C156(1)025(2)(3)(4)(5)	3.8	6.0	1.5	0.9	N/A	270	350	N/A	125	1
25	15	D/7343-31	T493D156(1)025(2)(3)(4)(5)	3.8	6.0	1.0	0.35	0.28	332	655	732	125	1
25	15	X/7343-43	T493X156(1)025(2)(3)(4)(5)	3.8	6.0	0.7	0.2	N/A	485	908	N/A	125	1
25	22	C/6032-28	T493C226(1)025(2)(3)(4)(5)	5.5	6.0	0.4	.275	N/A	524	632	N/A	125	1
25	22	D/7343-31	T493D226(1)025(2)(3)(4)(5)	5.5	6.0	0.8	0.2	N/A	433	866	N/A	125	1
25	22	X/7343-43	T493X226(1)025(2)(3)(4)(5)	5.5	4.0	0.7	0.23	N/A	485	847	N/A	125	1
25	33	D/7343-31	T493D336(1)025(2)(3)(4)(5)	8.3	6.0	0.7	0.4	0.09	463	612	1290	125	1
25	33	X/7343-43	T493X336(1)025(2)(3)(4)(5)	8.3	6.0	0.7	0.3	0.18	485	742	957	125	1
VDC at 85°C	µF	KEMET/EIA	(See below for part options)	µA at +25°C Maximum/ 5 Minutes	% at +25°C 120 Hz Maximum	Ω at 25°C 100 kHz Maximum	Ω at 25°C 100 kHz Maximum	Ω at 25°C 100 kHz Maximum	mA at +25°C 100 kHz	mA at +25°C 100 kHz	mA at +25°C 100 kHz	°C	Reflow Temp ≤ 260°C
Rated Voltage	Rated Cap	Case Code/ Case Size	KEMET Part Number	DC Leakage	DF	Standard ESR	Low ESR	Ultra-low ESR	Ripple Current STD ESR (rms)	Ripple Current Low ESR (rms)	Ripple Current Ultra-low ESR (rms)	Maximum Operating Temp	MSL

(1) To complete KEMET part number, insert M for ± 20%, K for ± 10% or J for 5%. Designates Capacitance tolerance.
(2) To complete KEMET part number, insert B (0.1%/1,000 Hours), C (0.01%/1,000 Hours) or A = N/A. Designates Reliability Level.
(3) To complete KEMET part number, insert B = Gold Plated, C = Hot solder dipped, H = Solder Plated, K = Solder Fused or T = 100% Tin (Sn). Designates Termination Finish.
(4) To complete KEMET part number, insert 61, 62, 63, 64 or 6(X)11, 6(X)12, 6(X)13, 6(X)21, 6(X)22, 6(X)23, 6(X)31, 6(X)32, 6(X)33. Designates screening options.
(5) To complete KEMET part number, insert 10 = Standard ESR, 20 = Low ESR or 30 = Ultra Low ESR. Designates ESR option.
Refer to Ordering Information for additional detail.

Downloaded from Arrow.com.

Table 1A – Ratings & Part Number Reference cont.

Rated Voltage	Rated Cap	Case Code/ Case Size	KEMET Part Number	DC Leakage	DF	Standard ESR	Low ESR	Ultra-low ESR	Ripple Current STD ESR (rms)	Ripple Current Low ESR (rms)	Ripple Current Ultra-low ESR (rms)	Maximum Operating Temp	MSL
VDC at 85°C	µF	KEMET/EIA	(See below for part options)	µA at +25°C Maximum/ 5 Minutes	% at +25°C 120 Hz Maximum	Ω at 25°C 100 kHz Maximum	Ω at 25°C 100 kHz Maximum	Ω at 25°C 100 kHz Maximum	mA at +25°C 100 kHz	mA at +25°C 100 kHz	mA at +25°C 100 kHz	°C	Reflow Temp ≤ 260°C
25	47	D/7343-31	T493D476(1)025(2)(3)(4)(5)	11.8	10.0	0.7	0.2	0.12	463	866	1118	125	1
25	47	X/7343-43	T493X476(1)025(2)(3)(4)(5)	11.8	6.0	0.7	0.3	0.15	485	742	1049	125	1
25	68	X/7343-43	T493X686(1)025(2)(3)(4)(5)	17	8.0	0.3	N/A	N/A	742	N/A	N/A	125	1
25	68	E/7360-38	T493E686(1)025(2)(3)(4)(5)	17	8.0	0.1	N/A	N/A	1414	N/A	N/A	125	1
35	0.1	A/3216-18	T493A104(1)035(2)(3)(4)(5)	0.5	4.0	20.0	10.0	N/A	61	87	N/A	125	1
35	0.15	A/3216-18	T493A154(1)035(2)(3)(4)(5)	0.5	4.0	19.0	6.0	N/A	63	112	N/A	125	1
35	0.22	A/3216-18	T493A224(1)035(2)(3)(4)(5)	0.5	4.0	18.0	6.0	N/A	65	112	N/A	125	1
35	0.33	A/3216-18	T493A334(1)035(2)(3)(4)(5)	0.5	4.0	15.0	6.0	N/A	71	112	N/A	125	1
35	0.47	A/3216-18	T493A474(1)035(2)(3)(4)(5)	0.5	4.0	14.0	4.0	N/A	73	137	N/A	125	1
35	0.47	B/3528-21	T493B474(1)035(2)(3)(4)(5)	0.5	4.0	8.0	2.5	1.5	97	173	224	125	1
35	0.68	A/3216-18	T493A684(1)035(2)(3)(4)(5)	0.5	4.0	10.0	6.0	N/A	87	112	N/A	125	1
35	0.68	B/3528-21	T493B684(1)035(2)(3)(4)(5)	0.5	4.0	6.5	2.5	N/A	107	173	N/A	125	1
35	1	A/3216-18	T493A105(1)035(2)(3)(4)(5)	0.5	4.0	10.0	6.0	N/A	87	112	N/A	125	1
35	1	B/3528-21	T493B105(1)035(2)(3)(4)(5)	0.5	4.0	5.0	2.0	1.5	122	206	224	125	1
35	1.5	A/3216-18	T493A155(1)035(2)(3)(4)(5)	0.5	6.0	7.5	N/A	N/A	100	N/A	N/A	125	1
35	1.5	B/3528-21	T493B155(1)035(2)(3)(4)(5)	0.5	6.0	5.0	3.0	N/A	122	158	N/A	125	1
35	1.5	C/6032-28	T493C155(1)035(2)(3)(4)(5)	0.5	6.0	4.5	2.5	N/A	156	210	N/A	125	1
35	2.2	B/3528-21	T493B225(1)035(2)(3)(4)(5)	0.8	6.0	4.0	2.5	1.5	137	173	224	125	1
35	2.2	C/6032-28	T493C225(1)035(2)(3)(4)(5)	0.8	6.0	3.5	1.5	0.75	177	270	383	125	1
35	3.3	B/3528-21	T493B335(1)035(2)(3)(4)(5)	1.2	6.0	3.5	1.3	N/A	156	224	N/A	125	1
35	3.3	C/6032-28	T493C335(1)035(2)(3)(4)(5)	1.2	6.0	2.5	0.8	0.60	210	370	428	125	1
35	4.7	B/3528-21	T493B475(1)035(2)(3)(4)(5)	1.6	6.0	1.5	N/A	N/A	224	N/A	N/A	125	1
35	4.7	C/6032-28	T493C475(1)035(2)(3)(4)(5)	1.6	6.0	2.5	0.6	0.45	210	428	494	125	1
35	4.7	D/7343-31	T493D475(1)035(2)(3)(4)(5)	1.6	6.0	1.5	0.7	N/A	316	463	N/A	125	1
35	6.8	C/6032-28	T493C685(1)035(2)(3)(4)(5)	2.4	6.0	2.0	0.9	N/A	234	350	N/A	125	1
35	6.8	D/7343-31	T493D685(1)035(2)(3)(4)(5)	2.4	6.0	1.3	0.5	0.40	340	548	612	125	1
35	10	C/6032-28	T493C106(1)035(2)(3)(4)(5)	3.5	6.0	2.0	1.2	N/A	234	303	N/A	125	1
35	10	D/7343-31	T493D106(1)035(2)(3)(4)(5)	3.5	6.0	1.0	0.3	0.25	332	707	775	125	1
35	10	X/7343-43	T493X106(1)035(2)(3)(4)(5)	3.5	4.0	0.9	0.25	0.18	428	812	957	125	1
35	15	C/6032-28	T493C156(1)035(2)(3)(4)(5)	5.3	6.0	0.45	N/A	N/A	494	N/A	N/A	125	1
35	15	D/7343-31	T493D156(1)035(2)(3)(4)(5)	5.3	6.0	0.8	0.3	0.23	433	707	808	125	1
35	15	X/7343-43	T493X156(1)035(2)(3)(4)(5)	5.3	6.0	0.9	0.3	0.20	428	742	908	125	1
35	22	D/7343-31	T493D226(1)035(2)(3)(4)(5)	7.7	6.0	0.7	0.4	0.20	463	612	866	125	1
35	22	X/7343-43	T493X226(1)035(2)(3)(4)(5)	7.7	6.0	0.7	0.3	0.20	485	742	908	125	1
35	33	D/7343-31	T493D336M035(2)(3)(4)(5)	11.6	6.0	0.3	N/A	N/A	707	N/A	N/A	125	1
35	33	X/7343-43	T493X336(1)035(2)(3)(4)(5)	11.6	6.0	0.6	0.3	0.18	524	742	957	125	1
35	47	X/7343-43	T493X476(1)035(2)(3)(4)(5)	16.5	6.0	0.25	N/A	N/A	812	N/A	N/A	125	1
35	47	E/7360-38	T493E476(1)035(2)(3)(4)(5)	16.5	10.0	0.5	0.3	N/A	632	816	N/A	125	1
50	0.1	A/3216-18	T493A104(1)050(2)(3)(4)(5)	0.5	4.0	20.0	10.0	N/A	61	87	N/A	125	1
50	0.15	A/3216-18	T493A154(1)050(2)(3)(4)(5)	0.5	4.0	19.0	10.0	N/A	63	87	N/A	125	1
50	0.15	B/3528-21	T493B154(1)050(2)(3)(4)(5)	0.5	4.0	16.0	10.0	N/A	68	87	N/A	125	1
50	0.22	A/3216-18	T493A224(1)050(2)(3)(4)(5)	0.5	4.0	18.0	N/A	N/A	65	N/A	N/A	125	1
50	0.22	B/3528-21	T493B224(1)050(2)(3)(4)(5)	0.5	4.0	14.0	10.0	N/A	73	87	N/A	125	1
50	0.33	B/3528-21	T493B334(1)050(2)(3)(4)(5)	0.5	4.0	10.0	2.5	N/A	87	173	N/A	125	1
50	0.47	B/3528-21	T493B474(1)050(2)(3)(4)(5)	0.5	4.0	9.0	2.0	N/A	91	194	N/A	125	1
VDC at 85°C	µF	KEMET/EIA	(See below for part options)	µA at +25°C Maximum/ 5 Minutes	% at +25°C 120 Hz Maximum	Ω at 25°C 100 kHz Maximum	Ω at 25°C 100 kHz Maximum	Ω at 25°C 100 kHz Maximum	mA at +25°C 100 kHz	mA at +25°C 100 kHz	mA at +25°C 100 kHz	°C	Reflow Temp ≤ 260°C
Rated Voltage	Rated Cap	Case Code/ Case Size	KEMET Part Number	DC Leakage	DF	Standard ESR	Low ESR	Ultra-low ESR	Ripple Current STD ESR (rms)	Ripple Current Low ESR (rms)	Ripple Current Ultra-low ESR (rms)	Maximum Operating Temp	MSL

(1) To complete KEMET part number, insert M for ± 20%, K for ± 10% or J for 5%. Designates Capacitance tolerance.
(2) To complete KEMET part number, insert B (0.1%/1,000 Hours), C (0.01%/1,000 Hours) or A = N/A. Designates Reliability Level.
(3) To complete KEMET part number, insert B = Gold Plated, C = Hot solder dipped, H = Solder Plated, K = Solder Fused or T = 100% Tin (Sn). Designates Termination Finish.
(4) To complete KEMET part number, insert 61, 62, 63, 64 or 6(X)11, 6(X)12, 6(X)13, 6(X)21, 6(X)22, 6(X)23, 6(X)31, 6(X)32, 6(X)33. Designates screening options.
(5) To complete KEMET part number, insert 10 = Standard ESR, 20 = Low ESR or 30 = Ultra Low ESR. Designates ESR option.
Refer to Ordering Information for additional detail.

Downloaded from Arrow.com.

Table 1A – Ratings & Part Number Reference cont.

Rated Voltage	Rated Cap	Case Code/ Case Size	KEMET Part Number	DC Leakage	DF	Standard ESR	Low ESR	Ultra-low ESR	Ripple Current STD ESR (rms)	Ripple Current Low ESR (rms)	Ripple Current Ultra-low ESR (rms)	Maximum Operating Temp	MSL
VDC at 85°C	µF	KEMET/EIA	(See below for part options)	µA at +25°C Maximum/ 5 Minutes	% at +25°C 120 Hz Maximum	Ω at 25°C 100 kHz Maximum	Ω at 25°C 100 kHz Maximum	Ω at 25°C 100 kHz Maximum	mA at +25°C 100 kHz	mA at +25°C 100 kHz	mA at +25°C 100 kHz	°C	Reflow Temp ≤ 260°C
50	0.47	C/6032-28	T493C474(1)050(2)(3)(4)(5)	0.5	4.0	8.0	1.8	N/A	117	247	N/A	125	1
50	0.68	A/3216-18	T493A684(1)050(2)(3)(4)(5)	0.5	4.0	7.9	N/A	N/A	97	N/A	N/A	125	1
50	0.68	C/6032-28	T493C684(1)050(2)(3)(4)(5)	0.5	4.0	7.0	1.6	N/A	125	262	N/A	125	1
50	1	B/3528-21	T493B105(1)050(2)(3)(4)(5)	0.5	4.0	7.0	N/A	N/A	103	N/A	N/A	125	1
50	1	C/6032-28	T493C105(1)050(2)(3)(4)(5)	0.5	4.0	5.5	1.6	1.3	141	262	290	125	1
50	1.5	C/6032-28	T493C155(1)050(2)(3)(4)(5)	0.8	6.0	4.5	1.5	N/A	156	270	N/A	125	1
50	1.5	D/7343-31	T493D155(1)050(2)(3)(4)(5)	0.8	6.0	3.5	1.0	N/A	207	332	N/A	125	1
50	2.2	C/6032-28	T493C225(1)050(2)(3)(4)(5)	1.1	6.0	3.5	1.5	N/A	177	270	N/A	125	1
50	2.2	D/7343-31	T493D225(1)050(2)(3)(4)(5)	1.1	6.0	2.5	0.8	0.60	245	433	500	125	1
50	3.3	D/7343-31	T493D335(1)050(2)(3)(4)(5)	1.7	6.0	2.0	0.8	0.70	274	433	463	125	1
50	4.7	D/7343-31	T493D475(1)050(2)(3)(4)(5)	2.4	6.0	1.5	0.6	0.28	316	500	732	125	1
50	4.7	X/7343-43	T493X475(1)050(2)(3)(4)(5)	2.4	4.0	0.9	0.3	N/A	428	742	N/A	125	1
50	6.8	D/7343-31	T493D685(1)050(2)(3)(4)(5)	3.4	6.0	0.6	0.3	N/A	500	707	N/A	125	1
50	6.8	X/7343-43	T493X685(1)050(2)(3)(4)(5)	3.4	6.0	1.0	0.5	N/A	406	574	N/A	125	1
50	10	X/7343-43	T493X106(1)050(2)(3)(4)(5)	5	6.0	0.7	0.4	N/A	485	642	N/A	125	1
50	15	X/7343-43	T493X156(1)050(2)(3)(4)(5)	7.5	6.0	1.0	N/A	N/A	406	N/A	N/A	125	1
63	6.8	X/7343-43	T493X685(1)063(2)(3)(4)(5)	4.3	6.0	1.0	0.6	0.3	406	524	742	125	1
63	10	X/7343-43	T493X106(1)063(2)(3)(4)(5)	6.3	6.0	0.6	0.4	0.2	524	642	908	125	1
VDC at 85°C	µF	KEMET/EIA	(See below for part options)	µA at +25°C Maximum/ 5 Minutes	% at +25°C 120 Hz Maximum	Ω at 25°C 100 kHz Maximum	Ω at 25°C 100 kHz Maximum	Ω at 25°C 100 kHz Maximum	mA at +25°C 100 kHz	mA at +25°C 100 kHz	mA at +25°C 100 kHz	°C	Reflow Temp ≤ 260°C
Rated Voltage	Rated Cap	Case Code/ Case Size	KEMET Part Number	DC Leakage	DF	Standard ESR	Low ESR	Ultra-low ESR	Ripple Current STD ESR (rms)	Ripple Current Low ESR (rms)	Ripple Current Ultra-low ESR (rms)	Maximum Operating Temp	MSL

(1) To complete KEMET part number, insert M for ± 20%, K for ± 10% or J for 5%. Designates Capacitance tolerance.
(2) To complete KEMET part number, insert B (0.1%/1,000 Hours), C (0.01%/1,000 Hours) or A = N/A. Designates Reliability Level.
(3) To complete KEMET part number, insert B = Gold Plated, C = Hot solder dipped, H = Solder Plated, K = Solder Fused or T = 100% Tin (Sn). Designates Termination Finish.
(4) To complete KEMET part number, insert 61, 62, 63, 64 or 6(X)11, 6(X)12, 6(X)13, 6(X)21, 6(X)22, 6(X)23, 6(X)31, 6(X)32, 6(X)33. Designates screening options.
(5) To complete KEMET part number, insert 10 = Standard ESR, 20 = Low ESR or 30 = Ultra Low ESR. Designates ESR option.
Refer to Ordering Information for additional detail.

Downloaded from Arrow.com.

Table 1B – DLA Drawing 07016, Ratings & Part Number Reference

Rated Voltage	Rated Cap	Case Code/ Case Size	KEMET Part Number	DLA Drawing 07016 Part Number	DC Leakage	DF	Standard ESR	Ripple Current STD ESR (rms)	Maximum Operating Temp	MSL
VDC at 85°C	µF	KEMET/EIA	(See page 2 for Ordering Information)	(See page 2 for Ordering Information)	µA at +25°C Max/5 Min	% at +25°C 120 Hz Max	Ω at+25°C 100 kHz Max	mA at +25°C 100 kHz	°C	Reflow Temp ≤ 260°C
4	33	A/3216-18	T493A336(1)004(2)(3)(4)20	07016-001(1)(2)(3)(4)	1.3	6.0	3.0	158	125	1
4	100	A/3216-18	T493A107(1)004(2)(3)(4)10	07016-003(1)(2)(3)(4)	4.0	30.0	1.4	230	125	1
4	100	B/3528-20	T493B107(1)004(2)(3)(4)20	07016-004(1)(2)(3)(4)	4.0	8.0	0.9	307	125	1
6.3	3.3	A/3216-18	T493A335(1)006(2)(3)(4)10	07016-006(1)(2)(3)(4)	0.5	6.0	8.0	97	125	1
6.3	4.7	A/3216-18	T493A475(1)006(2)(3)(4)10	07016-007(1)(2)(3)(4)	0.5	6.0	6.0	112	125	1
6.3	6.8	A/3216-18	T493A685(1)006(2)(3)(4)20	07016-008(1)(2)(3)(4)	0.5	6.0	5.0	122	125	1
6.3	10	A/3216-18	T493A106(1)006(2)(3)(4)10	07016-009(1)(2)(3)(4)	0.6	6.0	4.0	137	125	1
6.3	15	A/3216-18	T493A156(1)006(2)(3)(4)20	07016-010(1)(2)(3)(4)	0.9	6.0	3.5	146	125	1
6.3	22	A/3216-18	T493A226(1)006(2)(3)(4)20	07016-011(1)(2)(3)(4)	1.4	6.0	3.0	158	125	1
6.3	22	B/3528-20	T493B226(1)006(2)(3)(4)20	07016-012(1)(2)(3)(4)	1.4	6.0	0.6	376	125	1
6.3	33	B/3528-20	T493B336(1)006(2)(3)(4)20	07016-013(1)(2)(3)(4)	2.1	6.0	0.6	376	125	1
6.3	47	C/6032-28	T493C476(1)006(2)(3)(4)20	07016-014(1)(2)(3)(4)	3.0	6.0	0.3	606	125	1
6.3	68	B/3528-20	T493B686(1)006(2)(3)(4)10	07016-015(1)(2)(3)(4)	4.3	8.0	0.5	412	125	1
6.3	68	C/6032-28	T493C686(1)006(2)(3)(4)20	07016-016(1)(2)(3)(4)	4.3	6.0	0.2	742	125	1
6.3	100	C/6032-28	T493C107(1)006(2)(3)(4)30	07016-017(1)(2)(3)(4)	6.3	6.0	0.15	856	125	1
6.3	150	D/7343-31	T493D157(1)006(2)(3)(4)10	07016-019(1)(2)(3)(4)	9.5	6.0	0.125	1095	125	1
6.3	220	D/7343-31	T493D227(1)006(2)(3)(4)20	07016-020(1)(2)(3)(4)	13.9	8.0	0.1	1225	125	1
6.3	330	X/7343-43	T493X337(1)006(2)(3)(4)10	07016-021(1)(2)(3)(4)	20.8	8.0	0.1	1285	125	1
6.3	330	X/7343-43	T493X337(1)006(2)(3)(4)20	07016-022(1)(2)(3)(4)	20.8	8.0	0.05	1817	125	1
6.3	470	X/7343-43	T493X477M006(2)(3)(4)10	07016-023M(2)(3)(4)	29.6	10.0	0.20	908	125	1
6.3	470	X/7343-43	T493X477M006(2)(3)(4)20	07016-024M(2)(3)(4)	29.6	10.0	0.05	1817	125	1
10	4.7	A/3216-18	T493A475(1)010(2)(3)(4)20	07016-026(1)(2)(3)(4)	0.5	6.0	5.0	122	125	1
10	6.8	A/3216-18	T493A685(1)010(2)(3)(4)20	07016-027(1)(2)(3)(4)	0.7	6.0	4.0	137	125	1
10	10	A/3216-18	T493A106(1)010(2)(3)(4)10	07016-028(1)(2)(3)(4)	1.0	6.0	3.0	158	125	1
10	10	A/3216-18	T493A106(1)010(2)(3)(4)20	07016-029(1)(2)(3)(4)	1.0	6.0	1.8	204	125	1
10	15	A/3216-18	T493A156(1)010(2)(3)(4)30	07016-030(1)(2)(3)(4)	1.5	6.0	3.2	153	125	1
10	15	B/3528-20	T493B156(1)010(2)(3)(4)20	07016-032(1)(2)(3)(4)	1.5	6.0	0.6	376	125	1
10	22	B/3528-20	T493B226(1)010(2)(3)(4)10	07016-033(1)(2)(3)(4)	2.2	6.0	0.7	348	125	1
10	22	B/3528-20	T493B226(1)010(2)(3)(4)20	07016-034(1)(2)(3)(4)	2.2	6.0	0.5	412	125	1
10	22	C/6032-28	T493C226(1)010(2)(3)(4)30	07016-035(1)(2)(3)(4)	2.2	6.0	0.3	606	125	1
10	33	B/3528-20	T493B336(1)010(2)(3)(4)10	07016-037(1)(2)(3)(4)	3.3	6.0	0.6	376	125	1
10	33	B/3528-20	T493B336(1)010(2)(3)(4)20	07016-038(1)(2)(3)(4)	3.3	6.0	0.425	447	125	1
10	33	C/6032-28	T493C336(1)010(2)(3)(4)20	07016-039(1)(2)(3)(4)	3.3	6.0	0.5	469	125	1
10	47	C/6032-28	T493C476(1)010(2)(3)(4)10	07016-040(1)(2)(3)(4)	4.7	6.0	0.3	606	125	1
10	47	C/6032-28	T493C476(1)010(2)(3)(4)20	07016-041(1)(2)(3)(4)	4.7	6.0	0.2	742	125	1
10	68	C/6032-28	T493C686(1)010(2)(3)(4)20	07016-042(1)(2)(3)(4)	6.8	8.0	0.3	606	125	1
10	68	D/7343-31	T493D686(1)010(2)(3)(4)30	07016-044(1)(2)(3)(4)	6.8	6.0	0.15	1000	125	1
10	100	C/6032-28	T493C107(1)010(2)(3)(4)10	07016-045(1)(2)(3)(4)	10.0	8.0	0.2	742	125	1
10	220	D/7343-31	T493D227(1)010(2)(3)(4)30	07016-049(1)(2)(3)(4)	22.0	8.0	0.15	1000	125	1
10	220	X/7343-43	T493X227(1)010(2)(3)(4)30	07016-051(1)(2)(3)(4)	22.0	8.0	0.05	1817	125	1
10	330	X/7343-43	T493X337(1)010(2)(3)(4)20	07016-054(1)(2)(3)(4)	33.0	8.0	0.1	1285	125	1
10	330	X/7343-43	T493X337(1)010(2)(3)(4)30	07016-055(1)(2)(3)(4)	33.0	8.0	0.05	1817	125	1
10	470	X/7343-43	T493X477M010(2)(3)(4)10	07016-057M(2)(3)(4)	47.0	10.0	0.2	908	125	1
10	470	X/7343-43	T493X477M010(2)(3)(4)20	07016-058M(2)(3)(4)	47.0	10.0	0.05	1817	125	1
16	2.2	A/3216-18	T493A225(1)016(2)(3)(4)30	07016-060(1)(2)(3)(4)	0.5	6.0	5.5	117	125	1
16	3.3	A/3216-18	T493A335(1)016(2)(3)(4)10	07016-061(1)(2)(3)(4)	0.5	6.0	5.0	122	125	1
VDC at 85°C	µF	KEMET/EIA	(See page 2 for Ordering Information)	(See page 2 for Ordering Information)	µA at +25°C Max/5 Min	% at +25°C 120 Hz Max	Ω at+25°C 100 kHz Max	mA at +25°C 100 kHz	°C	Reflow Temp ≤ 260°C
Rated Voltage	Rated Cap	Case Code/ Case Size	KEMET Part Number	DLA Drawing 07016 Part Number	DC Leakage	DF	Standard ESR	Ripple Current STD ESR (rms)	Maximum Operating Temp	MSL

(1) To complete KEMET/DLA part number, insert M for ± 20%, K for ± 10% or J for 5%. Designates Capacitance tolerance.
(2) To complete KEMET/DLA part number, insert B (0.1%/1,000 Hours) or C (0.01%/1,000 Hours). Designates Reliability Level.
(3) To complete KEMET/DLA part number, insert B = Gold-plated, C = Hot solder dipped, H = Solder-plated. Designates Termination Finish.
(4) To complete KEMET/DLA part number, insert A = + 25ºC after Weibull, B = −55ºC and +85ºC after Weibull, C = −55ºC and + 85ºC before Weibull or Z or no option= No test required. Designates surge testing option.

Downloaded from Arrow.com.

Table 1B – DLA Drawing 07016, Ratings & Part Number Reference cont.

Rated Voltage	Rated Cap	Case Code/ Case Size	KEMET Part Number	DLA Drawing 07016 Part Number	DC Leakage	DF	Standard ESR	Ripple Current STD ESR (rms)	Maximum Operating Temp	MSL
VDC at 85°C	µF	KEMET/EIA	(See page 2 for Ordering Information)	(See page 2 for Ordering Information)	µA at +25°C Max/5 Min	% at +25°C 120 Hz Max	Ω at+25°C 100 kHz Max	mA at +25°C 100 kHz	°C	Reflow Temp ≤ 260°C
16	3.3	A/3216-18	T493A335(1)016(2)(3)(4)20	07016-062(1)(2)(3)(4)	0.5	6.0	3.5	146	125	1
16	4.7	A/3216-18	T493A475(1)016(2)(3)(4)10	07016-063(1)(2)(3)(4)	0.8	6.0	2.0	194	125	1
16	6.8	A/3216-18	T493A685(1)016(2)(3)(4)10	07016-064(1)(2)(3)(4)	1.1	6.0	1.5	224	125	1
16	6.8	B/3528-20	T493B685(1)016(2)(3)(4)20	07016-065(1)(2)(3)(4)	1.1	6.0	1.2	266	125	1
16	10	A/3216-18	T493A106(1)016(2)(3)(4)10	07016-066(1)(2)(3)(4)	1.6	6.0	3.0	158	125	1
16	10	B/3528-20	T493B106(1)016(2)(3)(4)20	07016-067(1)(2)(3)(4)	1.6	6.0	0.9	307	125	1
16	15	B/3528-20	T493B156(1)016(2)(3)(4)10	07016-068(1)(2)(3)(4)	2.4	6.0	0.8	326	125	1
16	15	B/3528-20	T493B156(1)016(2)(3)(4)20	07016-069(1)(2)(3)(4)	2.4	6.0	0.5	412	125	1
16	22	B/3528-20	T493B226(1)016(2)(3)(4)30	07016-070(1)(2)(3)(4)	3.6	6.0	0.6	376	125	1
16	22	C/6032-28	T493C226(1)016(2)(3)(4)20	07016-071(1)(2)(3)(4)	3.5	6.0	0.375	542	125	1
16	33	C/6032-28	T493C336(1)016(2)(3)(4)20	07016-074(1)(2)(3)(4)	5.3	6.0	0.3	606	125	1
16	47	C/6032-28	T493C476(1)016(2)(3)(4)30	07016-076(1)(2)(3)(4)	7.5	6.0	0.35	561	125	1
16	68	D/7343-31	T493D686(1)016(2)(3)(4)30	07016-079(1)(2)(3)(4)	10.9	6.0	0.15	1000	125	1
16	100	D/7343-31	T493D107(1)016(2)(3)(4)20	07016-080(1)(2)(3)(4)	16.0	6.0	0.125	1095	125	1
16	150	D/7343-31	T493D157M016(2)(3)(4)20	07016-082M(1)(2)(3)(4)	24.0	6.0	0.15	1000	125	1
16	150	D/7343-31	T493D157M016(2)(3)(4)30	07016-083M(1)(2)(3)(4)	24.0	6.0	0.06	1581	125	1
16	150	E/7360-38	T493E157(1)016(2)(3)(4)10	07016-084(1)(2)(3)(4)	24.0	6.0	0.05	2000	125	1
16	220	E/7360-38	T493E227(1)016(2)(3)(4)10	07016-085(1)(2)(3)(4)	35.2	8.0	0.05	2000	125	1
20	1.5	A/3216-18	T493A155(1)020(2)(3)(4)20	07016-086(1)(2)(3)(4)	0.5	6.0	6.5	107	125	1
20	2.2	A/3216-18	T493A225(1)020(2)(3)(4)10	07016-087(1)(2)(3)(4)	0.5	6.0	3.0	158	125	1
20	4.7	A/3216-18	T493A475(1)020(2)(3)(4)10	07016-088(1)(2)(3)(4)	0.9	6.0	4.0	137	125	1
20	4.7	A/3216-18	T493A475(1)020(2)(3)(4)20	07016-089(1)(2)(3)(4)	0.9	6.0	1.8	204	125	1
20	4.7	B/3528-20	T493B475(1)020(2)(3)(4)20	07016-090(1)(2)(3)(4)	0.9	6.0	1.0	292	125	1
20	6.8	B/3528-20	T493B685(1)020(2)(3)(4)20	07016-091(1)(2)(3)(4)	1.4	6.0	1.0	292	125	1
20	10	B/3528-20	T493B106(1)020(2)(3)(4)10	07016-092(1)(2)(3)(4)	2.0	6.0	1.0	292	125	1
20	10	B/3528-20	T493B106(1)020(2)(3)(4)20	07016-093(1)(2)(3)(4)	0.7	6.0	0.5	412	125	1
20	10	C/6032-28	T493C106(1)020(2)(3)(4)20	07016-094(1)(2)(3)(4)	2.0	6.0	0.7	396	125	1
20	15	C/6032-28	T493C156(1)020(2)(3)(4)20	07016-096(1)(2)(3)(4)	3.0	6.0	0.4	524	125	1
20	22	C/6032-28	T493C226(1)020(2)(3)(4)20	07016-098(1)(2)(3)(4)	4.4	6.0	0.4	524	125	1
20	33	D/7343-31	T493D336(1)020(2)(3)(4)20	07016-100(1)(2)(3)(4)	6.6	6.0	0.2	866	125	1
20	47	D/7343-31	T493D476(1)020(2)(3)(4)20	07016-102(1)(2)(3)(4)	9.4	6.0	0.2	866	125	1
20	68	D/7343-31	T493D686(1)020(2)(3)(4)20	07016-104(1)(2)(3)(4)	13.6	6.0	0.2	866	125	1
20	68	X/7343-43	T493X686(1)020(2)(3)(4)20	07016-106(1)(2)(3)(4)	13.6	6.0	0.2	908	125	1
25	0.68	A/3216-18	T493A684(1)025(2)(3)(4)10	07016-108M(1)(2)(3)(4)	0.5	4.0	10.0	87	125	1
25	1	A/3216-18	T493A105(1)025(2)(3)(4)10	07016-109(1)(2)(3)(4)	0.5	4.0	8.0	97	125	1
25	1.5	A/3216-18	T493A155(1)025(2)(3)(4)10	07016-110(1)(2)(3)(4)	0.5	6.0	7.5	100	125	1
25	1.5	A/3216-18	T493A155(1)025(2)(3)(4)20	07016-111(1)(2)(3)(4)	0.5	6.0	3.0	158	125	1
25	2.2	A/3216-18	T493A225(1)025(2)(3)(4)10	07016-112(1)(2)(3)(4)	0.5	6.0	7.0	104	125	1
25	2.2	B/3528-20	T493B225(1)025(2)(3)(4)20	07016-113(1)(2)(3)(4)	0.6	6.0	2.0	206	125	1
25	3.3	B/3528-20	T493B335(1)025(2)(3)(4)20	07016-114(1)(2)(3)(4)	0.8	6.0	2.0	206	125	1
25	4.7	A/3216-18	T493A475(1)025(2)(3)(4)10	07016-115(1)(2)(3)(4)	1.2	6.0	3.1	156	125	1
25	4.7	B/3528-20	T493B475(1)025(2)(3)(4)10	07016-118(1)(2)(3)(4)	1.7	6.0	2.8	174	125	1
25	4.7	B/3528-20	T493B475(1)025(2)(3)(4)20	07016-116(1)(2)(3)(4)	1.2	6.0	1.5	238	125	1
25	4.7	B/3528-20	T493B475(1)025(2)(3)(4)30	07016-119(1)(2)(3)(4)	1.2	6.0	0.7	348	125	1
25	6.8	C/6032-28	T493C685(1)025(2)(3)(4)20	07016-120(1)(2)(3)(4)	1.7	6.0	0.7	396	125	1
25	10	C/6032-28	T493C106(1)025(2)(3)(4)10	07016-121(1)(2)(3)(4)	2.5	6.0	0.5	469	125	1
VDC at 85°C	µF	KEMET/EIA	(See page 2 for Ordering Information)	(See page 2 for Ordering Information)	µA at +25°C Max/5 Min	% at +25°C 120 Hz Max	Ω at+25°C 100 kHz Max	mA at +25°C 100 kHz	°C	Reflow Temp ≤ 260°C
Rated Voltage	Rated Cap	Case Code/ Case Size	KEMET Part Number	DLA Drawing 07016 Part Number	DC Leakage	DF	Standard ESR	Ripple Current STD ESR (rms)	Maximum Operating Temp	MSL

(1) To complete KEMET/DLA part number, insert M for ± 20%, K for ± 10% or J for 5%. Designates Capacitance tolerance.
(2) To complete KEMET/DLA part number, insert B (0.1%/1,000 Hours) or C (0.01%/1,000 Hours). Designates Reliability Level.
(3) To complete KEMET/DLA part number, insert B = Gold-plated, C = Hot solder dipped, H = Solder-plated. Designates Termination Finish.
(4) To complete KEMET/DLA part number, insert A = + 25°C after Weibull, B = −55°C and +85°C after Weibull, C = −55°C and + 85°C before Weibull or Z or no option= No test required. Designates surge testing option.

Downloaded from Arrow.com.

Table 1B – DLA Drawing 07016, Ratings & Part Number Reference cont.

Rated Voltage	Rated Cap	Case Code/ Case Size	KEMET Part Number	DLA Drawing 07016 Part Number	DC Leakage	DF	Standard ESR	Ripple Current STD ESR (rms)	Maximum Operating Temp	MSL
VDC at 85°C	µF	KEMET/EIA	(See page 2 for Ordering Information)	(See page 2 for Ordering Information)	µA at +25°C Max/5 Min	% at +25°C 120 Hz Max	Ω at+25°C 100 kHz Max	mA at +25°C 100 kHz	°C	Reflow Temp ≤ 260°C
25	10	C/6032-28	T493C106(1)025(2)(3)(4)20	07016-122(1)(2)(3)(4)	2.5	6.0	0.3	606	125	1
25	22	C/6032-28	T493C226(1)025(2)(3)(4)10	07016-123(1)(2)(3)(4)	5.5	6.0	0.4	524	125	1
25	22	C/6032-28	T493C226(1)025(2)(3)(4)20	07016-124(1)(2)(3)(4)	5.5	6.0	0.275	632	125	1
25	22	D/7343-31	T493D226(1)025(2)(3)(4)20	07016-125(1)(2)(3)(4)	5.5	6.0	0.2	866	125	1
25	33	D/7343-31	T493D336(1)025(2)(3)(4)20	07016-127(1)(2)(3)(4)	8.3	6.0	0.3	707	125	1
25	33	D/7343-31	T493D336(1)025(2)(3)(4)30	07016-128(1)(2)(3)(4)	8.3	6.0	0.09	1290	125	1
25	47	D/7343-31	T493D476(1)025(2)(3)(4)20	07016-130M(1)(2)(3)(4)	11.8	6.0	0.25	775	125	1
25	47	D/7343-31	T493D476(1)025(2)(3)(4)30	07016-131M(1)(2)(3)(4)	11.8	6.0	0.175	926	125	1
25	68	E/7360-38	T493E686(1)025(2)(3)(4)10	07016-132(1)(2)(3)(4)	17.0	8.0	0.1	1414	125	1
35	0.47	A/3216-18	T493A474(1)035(2)(3)(4)20	07016-133M(1)(2)(3)(4)	0.5	4.0	12.0	79	125	1
35	0.68	A/3216-18	T493A684(1)035(2)(3)(4)20	07016-134M(1)(2)(3)(4)	0.5	4.0	8.0	97	125	1
35	1	A/3216-18	T493A105(1)035(2)(3)(4)20	07016-135(1)(2)(3)(4)	0.5	4.0	7.5	100	125	1
35	1.5	A/3216-18	T493A155(1)035(2)(3)(4)10	07016-136(1)(2)(3)(4)	0.5	6.0	7.5	100	125	1
35	1.5	B/3528-20	T493B155(1)035(2)(3)(4)10	07016-137(1)(2)(3)(4)	0.5	6.0	5.2	128	125	1
35	2.2	B/3528-20	T493B225(1)035(2)(3)(4)30	07016-138(1)(2)(3)(4)	0.8	6.0	2.0	206	125	1
35	4.7	B/3528-20	T493B475(1)035(2)(3)(4)10	07016-140(1)(2)(3)(4)	1.6	6.0	1.5	238	125	1
35	4.7	D/7343-31	T493D475(1)035(2)(3)(4)10	07016-141(1)(2)(3)(4)	1.6	6.0	0.45	577	125	1
35	6.8	C/6032-28	T493C685(1)035(2)(3)(4)10	07016-142(1)(2)(3)(4)	2.4	6.0	0.35	561	125	1
35	6.8	D/7343-31	T493D685(1)035(2)(3)(4)30	07016-143(1)(2)(3)(4)	2.4	6.0	0.4	612	125	1
35	10	C/6032-28	T493C106(1)035(2)(3)(4)20	07016-144(1)(2)(3)(4)	3.5	6.0	1.6	262	125	1
35	15	C/6032-28	T493C156(1)035(2)(3)(4)10	07016-146(1)(2)(3)(4)	5.3	6.0	0.45	494	125	1
35	15	D/7343-31	T493D156(1)035(2)(3)(4)10	07016-147(1)(2)(3)(4)	5.3	6.0	0.3	707	125	1
35	15	D/7343-31	T493D156(1)035(2)(3)(4)20	07016-148(1)(2)(3)(4)	5.3	6.0	0.1	1225	125	1
35	22	D/7343-31	T493D226(1)035(2)(3)(4)20	07016-149(1)(2)(3)(4)	7.7	6.0	0.4	612	125	1
35	33	D/7343-31	T493D336M035(2)(3)(4)10	07016-152M(2)(3)(4)	11.6	6.0	0.3	707	125	1
35	33	D/7343-31	T493D336M035(2)(3)(4)20	07016-153M(2)(3)(4)	11.6	6.0	0.2	866	125	1
35	33	X/7343-43	T493X336(1)035(2)(3)(4)20	07016-154M(1)(2)(3)(4)	11.6	6.0	0.3	742	125	1
35	47	X/7343-43	T493X476M035(2)(3)(4)10	07016-155M(1)(2)(3)(4)	16.5	6.0	0.25	812	125	1
35	47	E/7360-38	T493E476M035(2)(3)(4)10	07016-156M(1)(2)(3)(4)	16.5	6.0	0.20	1000	125	1
50	0.15	A/3216-18	T493A154(1)050(2)(3)(4)20	07016-157M(1)(2)(3)(4)	0.5	4.0	15.0	71	125	1
50	0.22	A/3216-18	T493A224M050(2)(3)(4)10	07016-158M(1)(2)(3)(4)	0.5	4.0	18.0	65	125	1
50	0.47	B/3528-20	T493B474(1)050(2)(3)(4)20	07016-160(1)(2)(3)(4)	0.5	4.0	9.5	95	125	1
50	0.68	A/3216-18	T493A684(1)050(2)(3)(4)10	07016-161(1)(2)(3)(4)	0.5	4.0	7.9	97	125	1
50	1	B/3528-20	T493B105(1)050(2)(3)(4)10	07016-163(1)(2)(3)(4)	0.5	4.0	7.0	110	125	1
50	1.5	C/6032-28	T493C155(1)050(2)(3)(4)20	07016-164(1)(2)(3)(4)	0.8	6.0	2.0	235	125	1
50	1.5	D/7343-31	T493D155(1)050(2)(3)(4)20	07016-165(1)(2)(3)(4)	0.8	6.0	1.5	316	125	1
50	2.2	D/7343-31	T493D225(1)050(2)(3)(4)20	07016-166(1)(2)(3)(4)	1.1	6.0	1.2	354	125	1
50	3.3	D/7343-31	T493D335(1)050(2)(3)(4)20	07016-167(1)(2)(3)(4)	1.7	6.0	0.8	433	125	1
50	4.7	D/7343-31	T493D475(1)050(2)(3)(4)30	07016-168(1)(2)(3)(4)	2.4	6.0	0.3	707	125	1
50	6.8	D/7343-31	T493D685(1)050(2)(3)(4)10	07016-169(1)(2)(3)(4)	3.4	6.0	0.6	500	125	1
50	6.8	D/7343-31	T493D685(1)050(2)(3)(4)20	07016-170(1)(2)(3)(4)	3.4	6.0	0.3	707	125	1
50	6.8	X/7343-43	T493X685(1)050(2)(3)(4)20	07016-171(1)(2)(3)(4)	3.4	6.0	0.4	642	125	1
VDC at 85°C	µF	KEMET/EIA	(See page 2 for Ordering Information)	(See page 2 for Ordering Information)	µA at +25°C Max/5 Min	% at +25°C 120 Hz Max	Ω at+25°C 100 kHz Max	mA at +25°C 100 kHz	°C	Reflow Temp ≤ 260°C
Rated Voltage	Rated Cap	Case Code/ Case Size	KEMET Part Number	DLA Drawing 07016 Part Number	DC Leakage	DF	Standard ESR	Ripple Current STD ESR (rms)	Maximum Operating Temp	MSL

(1) To complete KEMET/DLA part number, insert M for ± 20%, K for ± 10% or J for 5%. Designates Capacitance tolerance.
(2) To complete KEMET/DLA part number, insert B (0.1%/1,000 Hours) or C (0.01%/1,000 Hours). Designates Reliability Level.
(3) To complete KEMET/DLA part number, insert B = Gold-plated, C = Hot solder dipped, H = Solder-plated. Designates Termination Finish.
(4) To complete KEMET/DLA part number, insert A = + 25°C after Weibull, B = −55°C and +85°C after Weibull, C = −55°C and + 85°C before Weibull or Z or no option= No test required. Designates surge testing option.

Downloaded from Arrow.com.

Recommended Voltage Derating Guidelines

	-55°C to 85°C	85°C to 125°C
% Change in Working DC Voltage with Temperature	V_R	67% of V_R
Recommended Maximum Application Voltage	50% of V_R	33% of V_R

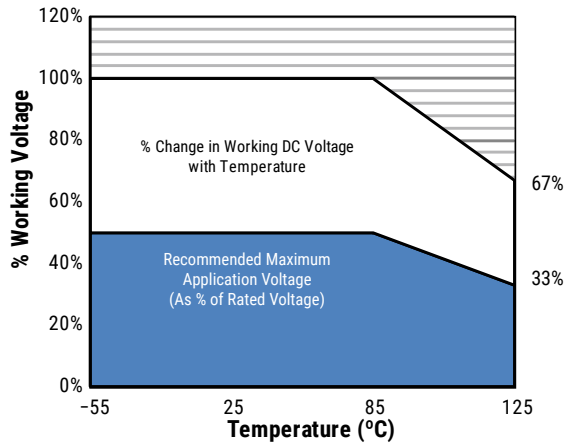

Ripple Current/Ripple Voltage

Permissible AC ripple voltage and current are related to equivalent series resistance (ESR) and the power dissipation capabilities of the device. Permissible AC ripple voltage which may be applied is limited by two criteria:

1. The positive peak AC voltage plus the DC bias voltage, if any, must not exceed the DC voltage rating of the capacitor.
2. The negative peak AC voltage in combination with bias voltage, if any, must not exceed the allowable limits specified for reverse voltage. See the Reverse Voltage section for allowable limits.

The maximum power dissipation by case size can be determined using the table at right. The maximum power dissipation rating stated in the table must be reduced with increasing environmental operating temperatures. Refer to the table below for temperature compensation requirements.

Temperature Compensation Multipliers for Maximum Ripple Current		
T ≤ 25°C	T ≤ 85°C	T ≤ 125°C
1.00	0.90	0.40

T= Environmental Temperature

The maximum power dissipation rating must be reduced with increasing environmental operating temperatures. Refer to the Temperature Compensation Multiplier table for details.

KEMET Case Code	EIA Case Code	Maximum Power Dissipation (P max) mWatts at 25°C w/+20°C Rise
A	3216–18	75
B	3528–21	85
C	6032–28	110
D	7343–31	150
X	7343–43	165
E	7360–38	200
S	3216–12	60
T	3528–12	70
U	6032–15	90
V	7343–20	125
T510X	7343–43	270
T510E	7360–38	285

Using the P max of the device, the maximum allowable rms ripple current or voltage may be determined.

$I(max) = \sqrt{P\ max/R}$
$E(max) = Z\sqrt{P\ max/R}$

I = rms ripple current (amperes)
E = rms ripple voltage (volts)
P max = maximum power dissipation (watts)
R = ESR at specified frequency (ohms)
Z = Impedance at specified frequency (ohms)

Downloaded from Arrow.com.

Reverse Voltage

Solid tantalum capacitors are polar devices and may be permanently damaged or destroyed if connected with the wrong polarity. The positive terminal is identified on the capacitor body by a stripe plus in some cases a beveled edge. A small degree of transient reverse voltage is permissible for short periods per the table. The capacitors should not be operated continuously in reverse mode, even within these limits.

Temperature	Permissible Transient Reverse Voltage
25°C	15% of Rated voltage
85°C	5% of Rated voltage
125°C	1% of Rated voltage

Table 2 – Land Dimensions/Courtyard

KEMET	Metric Size Code	Density Level A: Maximum (Most) Land Protrusion (mm)					Density Level B: Median (Nominal) Land Protrusion (mm)					Density Level C: Minimum (Least) Land Protrusion (mm)				
Case	EIA	W	L	S	V1	V2	W	L	S	V1	V2	W	L	S	V1	V2
A	3216–18	1.35	2.20	0.62	6.02	2.80	1.23	1.80	0.82	4.92	2.30	1.13	1.42	0.98	4.06	2.04
B	3528–21	2.35	2.21	0.92	6.32	4.00	2.23	1.80	1.12	5.22	3.50	2.13	1.42	1.28	4.36	3.24
C	6032–25	2.35	2.77	2.37	8.92	4.50	2.23	2.37	2.57	7.82	4.00	2.13	1.99	2.73	6.96	3.74
D	7343–31	2.55	2.77	3.67	10.22	5.60	2.43	2.37	3.87	9.12	5.10	2.33	1.99	4.03	8.26	4.84
E[1]	7360–38	3.25	2.77	3.67	10.22	7.30	3.13	2.37	3.87	9.12	6.80	3.03	1.99	4.03	8.26	6.54
X[1]	7343–43	2.55	2.77	3.67	10.22	5.60	2.43	2.37	3.87	9.12	5.10	2.33	1.99	4.03	8.26	4.84

Density Level A: *For low-density product applications. Recommended for wave solder applications and provides a wider process window for reflow solder processes.*
Density Level B: *For products with a moderate level of component density. Provides a robust solder attachment condition for reflow solder processes.*
Density Level C: *For high component desity product applications. Before adapting the minimum land pattern variations the user should perform qualification testing based on the conditions outlined in IPC standard 7351 (IPC–7351).*
[1] *Height of these chips may create problems in wave soldering.*

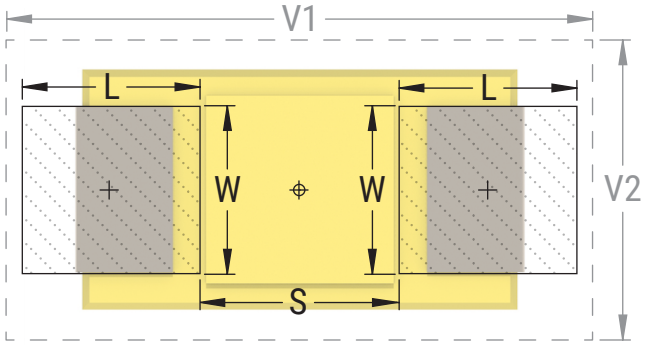

Grid Placement Courtyard

Downloaded from Arrow.com.

Soldering Process

KEMET's families of surface mount capacitors are compatible with wave (single or dual), convection, IR, or vapor phase reflow techniques. Preheating of these components is recommended to avoid extreme thermal stress. KEMET's recommended profile conditions for convection and IR reflow reflect the profile conditions of the IPC/J–STD–020D standard for moisture sensitivity testing. The devices can safely withstand a maximum of three reflow passes at these conditions.

Please note that although the X/7343–43 case size can withstand wave soldering, the tall profile (4.3 mm maximum) dictates care in wave process development.

Hand soldering should be performed with care due to the difficulty in process control. If performed, care should be taken to avoid contact of the soldering iron to the molded case. The iron should be used to heat the solder pad, applying solder between the pad and the termination, until reflow occurs. Once reflow occurs, the iron should be removed immediately. "Wiping" the edges of a chip and heating the top surface is not recommended.

During typical reflow operations, a slight darkening of the gold-colored epoxy may be observed. This slight darkening is normal and not harmful to the product. Marking permanency is not affected by this change.

Profile Feature	SnPb Assembly	Pb-Free Assembly
Preheat/Soak		
Temperature Minimum (T_{Smin})	100°C	150°C
Temperature Maximum (T_{Smax})	150°C	200°C
Time (t_s) from T_{smin} to T_{smax})	60 – 120 seconds	60 – 120 seconds
Ramp-up Rate (T_L to T_P)	3°C/seconds maximum	3°C/seconds maximum
Liquidous Temperature (T_L)	183°C	217°C
Time Above Liquidous (t_L)	60 – 150 seconds	60 – 150 seconds
Peak Temperature (T_P)	220°C* 235°C**	250°C* 260°C**
Time within 5°C of Maximum Peak Temperature (t_p)	20 seconds maximum	30 seconds maximum
Ramp-down Rate (T_P to T_L)	6°C/seconds maximum	6°C/seconds maximum
Time 25°C to Peak Temperature	6 minutes maximum	8 minutes maximum

Note: All temperatures refer to the center of the package, measured on the package body surface that is facing up during assembly reflow.
**Case Size D, E, P, Y, and X*
***Case Size A, B, C, H, I, K, M, R, S, T, U, V, W, and Z*

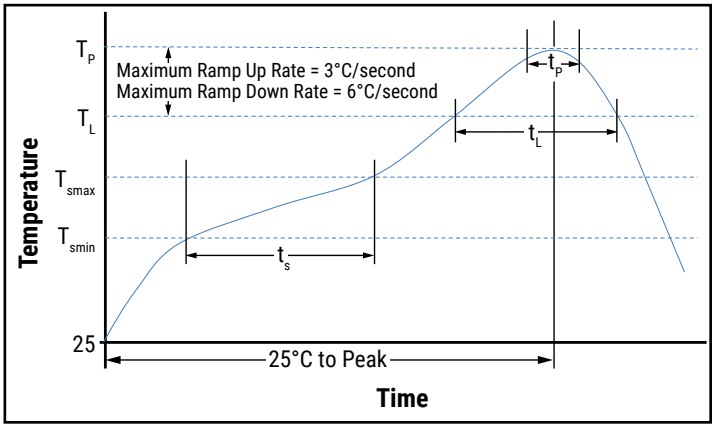

Storage

Tantalum chip capacitors should be stored in normal working environments. While the chips themselves are quite robust in other environments, solderability will be degraded by exposure to high temperatures, high humidity, corrosive atmospheres, and long term storage. In addition, packaging materials will be degraded by high temperature – reels may soften or warp and tape peel force may increase. KEMET recommends that maximum storage temperature not exceed 40ºC and maximum storage humidity not exceed 60% relative humidity. Temperature fluctuations should be minimized to avoid condensation on the parts and atmospheres should be free of chlorine and sulphur bearing compounds. For optimized solderability chip stock should be used promptly, preferably within three years of receipt.

Downloaded from Arrow.com.

Construction

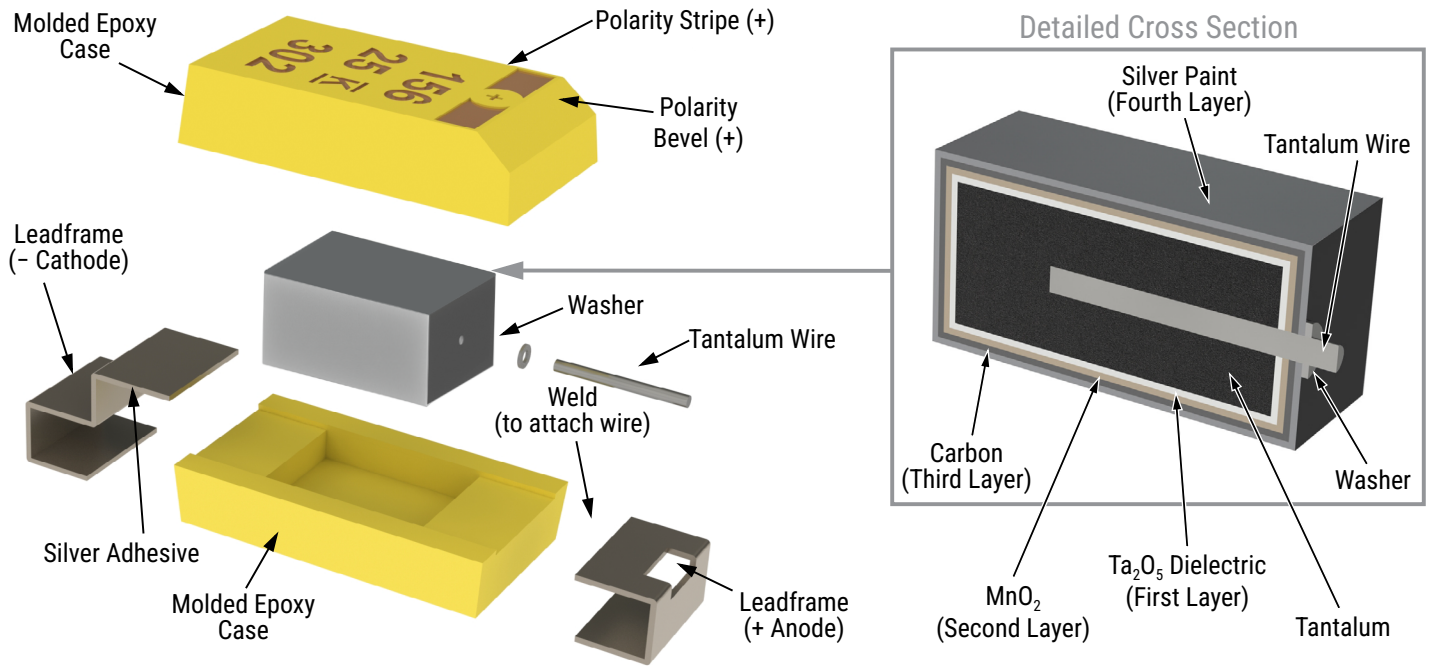

Capacitor Marking

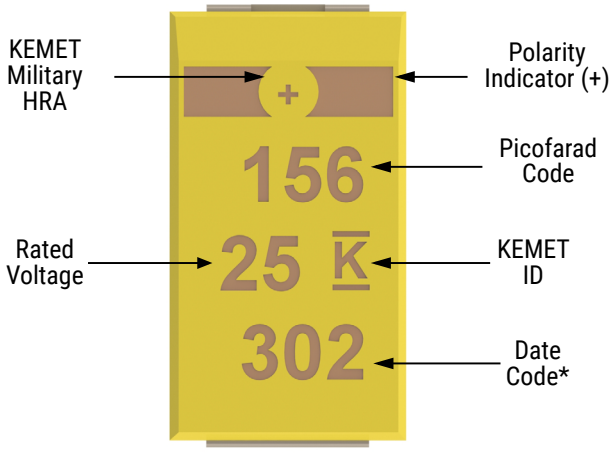

Date Code *	
1st digit = Last number of Year	0 = 2020 1 = 2021 2 = 2022 3 = 2023 4 = 2024
2nd and 3rd digit = Week of the Year	01 = 1st week of the Year to 52 = 52nd week of the Year

* 302 = 2nd week of 2023

Downloaded from Arrow.com.

Tape & Reel Packaging Information

KEMET's molded chip capacitor families are packaged in 8 and 12 mm plastic tape on 7" and 13" reels in accordance with *EIA Standard 481*: Embossed Carrier Taping of Surface Mount Components for Automatic Handling. This packaging system is compatible with all tape-fed automatic pick-and-place systems.

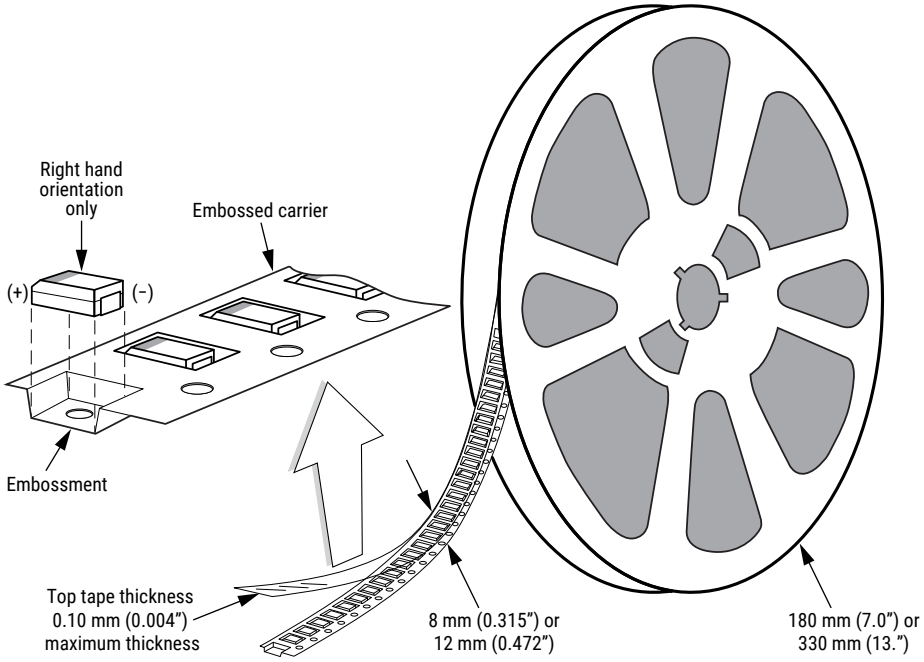

Table 3 – Packaging Quantity

Case Code		Tape Width (mm)	7" Reel*	13" Reel*
KEMET	EIA			
S	3216-12	8	2,500	10,000
T	3528-12	8	2,500	10,000
M	3528-15	8	2,500	8,000
U	6032-15	12	1,000	5,000
L	6032-19	12	1,000	3,000
W	7343-15	12	1,000	3,000
Z	7343-17	12	1,000	3,000
V	7343-20	12	1,000	3,000
A	3216-18	8	2,000	9,000
B	3528-21	8	2,000	8,000
C	6032-28	12	500	3,000
D	7343-31	12	500	2,500
Q	7343-12	12	1,000	3,000
Y	7343-40	12	500	2,000
X	7343-43	12	500	2,000
E/T428P	7360-38	12	500	2,000
H	7360-20	12	1,000	2,500
O	7360-43	12	250	1,000

** No C-Spec required for 7" reel packaging. C-7280 required for 13" reel packaging.*

Downloaded from Arrow.com.

Figure 1 – Embossed (Plastic) Carrier Tape Dimensions

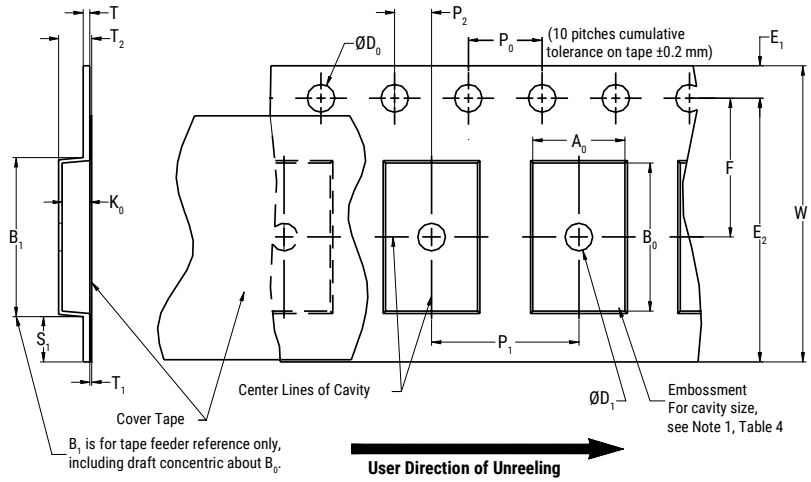

Table 4 – Embossed (Plastic) Carrier Tape Dimensions

Metric will govern

Constant Dimensions — Millimeters (Inches)									
Tape Size	D_0	D_1 Minimum Note 1	E_1	P_0	P_2	R Reference Note 2	S_1 Minimum Note 3	T Maximum	T_1 Maximum
8 mm	1.5 +0.10/−0.0 (0.059 +0.004/−0.0)	1.0 (0.039)	1.75 ±0.10 (0.069 ±0.004)	4.0 ±0.10 (0.157 ±0.004)	2.0 ±0.05 (0.079 ±0.002)	25.0 (0.984)	0.600 (0.024)	0.600 (0.024)	0.100 (0.004)
12 mm		1.5 (0.059)				30 (1.181)			

Variable Dimensions — Millimeters (Inches)								
Tape Size	Pitch	B_1 Maximum Note 4	E_2 Minimum	F	P_1	T_2 Maximum	W Maximum	A_0, B_0 & K_0
8 mm	Single (4 mm)	4.35 (0.171)	6.25 (0.246)	3.5 ±0.05 (0.138 ±0.002)	4.0 ±0.10 (0.157 ±0.004)	2.5 (0.098)	8.3 (0.327)	Note 5
12 mm	Single (4 mm) and Double (8 mm)	8.2 (0.323)	10.25 (0.404)	5.5 ±0.05 (0.217 ±0.002)	4.0 ±0.10 (0.157 ±0.004) or 8.0 ±0.10 (0.315 ±0.004)	4.6 (0.181)	12.3 (0.484)	

1. *The embossment hole location shall be measured from the sprocket hole controlling the location of the embossment. Dimensions of embossment location and hole location shall be applied independent of each other.*
2. *The tape, with or without components, shall pass around R without damage (see Figure 4).*
3. *If S_1 < 1.0 mm, there may not be enough area for cover tape to be properly applied (see EIA Standard 481–D, paragraph 4.3, section b).*
4. *B_1 dimension is a reference dimension for tape feeder clearance only.*
5. *The cavity defined by A_0, B_0 and K_0 shall surround the component with sufficient clearance that:*
   (a) the component does not protrude above the top surface of the carrier tape.
   (b) the component can be removed from the cavity in a vertical direction without mechanical restriction, after the top cover tape has been removed.
   (c) rotation of the component is limited to 20° maximum for 8 and 12 mm tapes (see Figure 2).
   (d) lateral movement of the component is restricted to 0.5 mm maximum for 8 mm and 12 mm wide tape (see Figure 3).
   (e) see Addendum in EIA Standard 481–D for standards relating to more precise taping requirements.

Downloaded from Arrow.com.

Packaging Information Performance Notes

1. Cover tape break force: 1.0 kg minimum.
2. Cover tape peel strength: The total peel strength of the cover tape from the carrier tape shall be:

Tape Width	Peel Strength
8 mm	0.1 to 1.0 newton (10 to 100 gf)
12 mm	0.1 to 1.3 newton (10 to 130 gf)

The direction of the pull shall be opposite the direction of the carrier tape travel. The pull angle of the carrier tape shall be 165° to 180° from the plane of the carrier tape. During peeling, the carrier and/or cover tape shall be pulled at a velocity of 300 ±10 mm/minute.
3. Labeling: Bar code labeling (standard or custom) shall be on the side of the reel opposite the sprocket holes. *Refer to EIA Standards 556 and 624*.

Figure 2 – Maximum Component Rotation

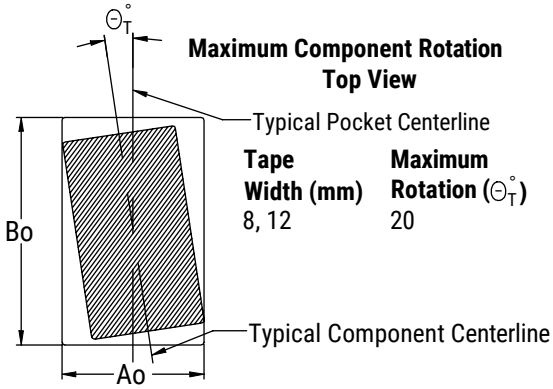

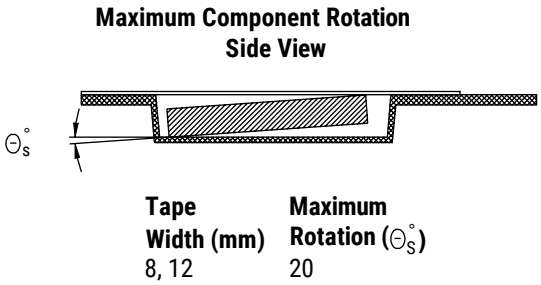

Figure 3 – Maximum Lateral Movement

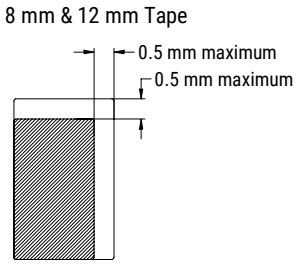

Figure 4 – Bending Radius

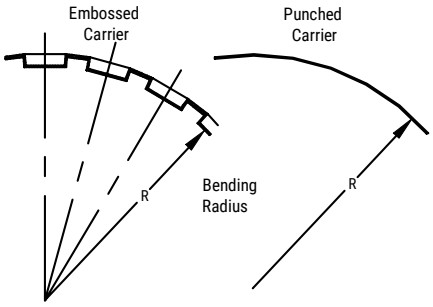

Downloaded from Arrow.com.

Figure 5 – Reel Dimensions

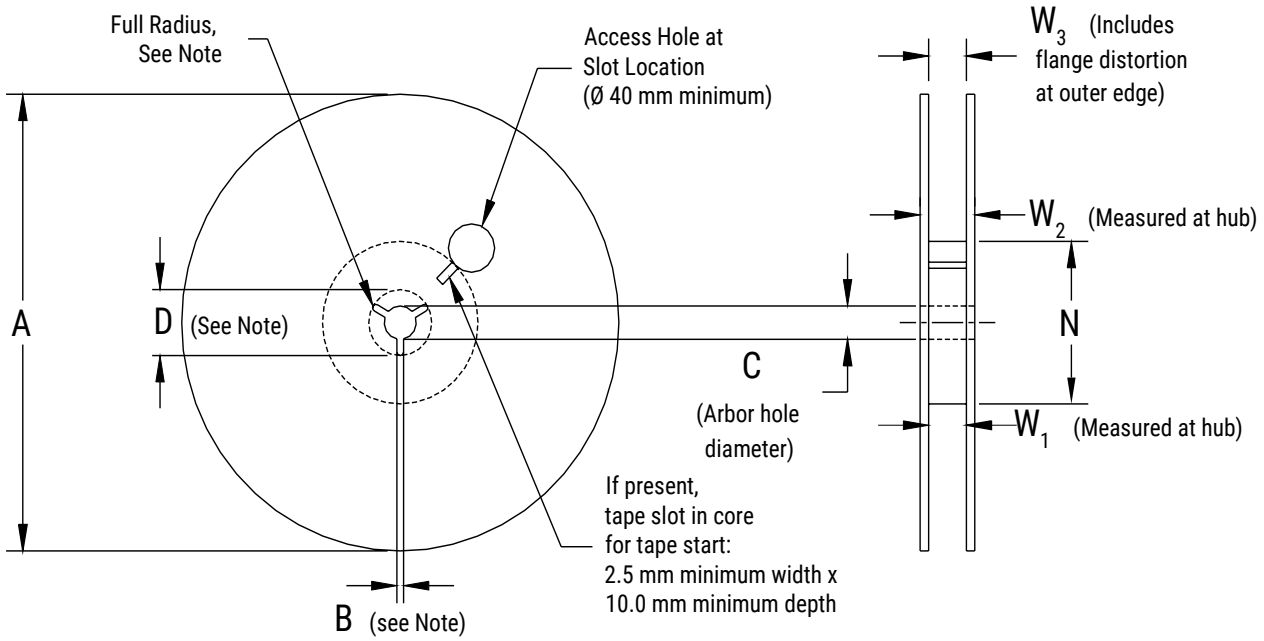

Note: Drive spokes optional; if used, dimensions B and D shall apply.

Table 5 – Reel Dimensions

Metric will govern

Constant Dimensions — Millimeters (Inches)				
Tape Size	A	B Minimum	C	D Minimum
8 mm	178 ±0.20 (7.008 ±0.008) or 330 ±0.20 (13.000 ±0.008)	1.5 (0.059)	13.0 +0.5/−0.2 (0.521 +0.02/−0.008)	20.2 (0.795)
12 mm				

Variable Dimensions — Millimeters (Inches)				
Tape Size	N Minimum	W_1	W_2 Maximum	W_3
8 mm	50 (1.969)	8.4 +1.5/−0.0 (0.331 +0.059/−0.0)	14.4 (0.567)	Shall accommodate tape width without interference
12 mm		12.4 +2.0/−0.0 (0.488 +0.078/−0.0)	18.4 (0.724)	

Downloaded from Arrow.com.

Figure 6 – Tape Leader & Trailer Dimensions

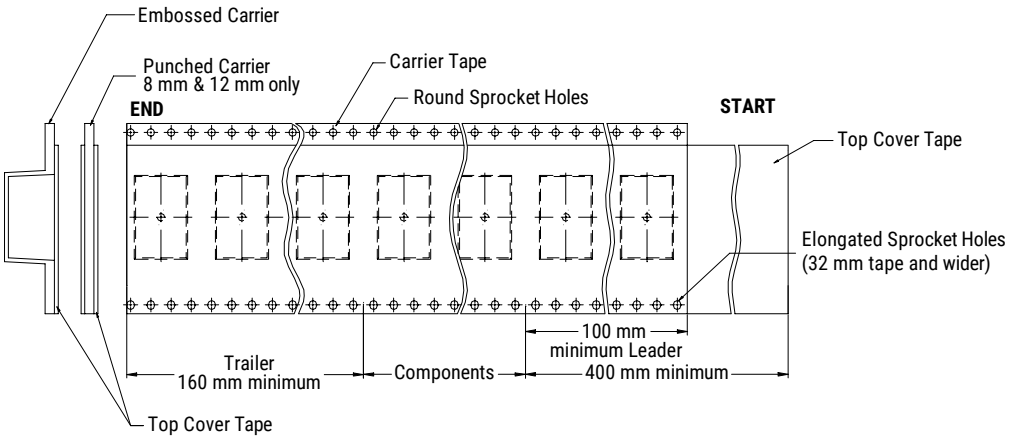

Figure 7 – Maximum Camber

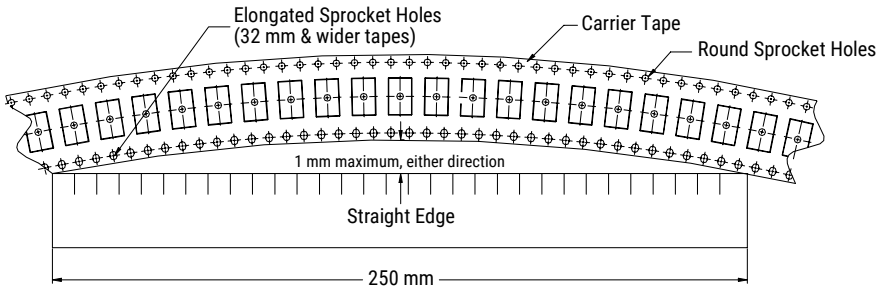

Downloaded from Arrow.com.

KEMET Electronics Corporation Sales Offices

For a complete list of our global sales offices, please visit https://www.yageogroup.com/SalesResources/SalesOffices

Disclaimer

All product specifications, statements, information and data (collectively, the "Information") in this datasheet are subject to change. The customer is responsible for checking and verifying the extent to which the Information contained in this publication is applicable to an order at the time the order is placed. All Information given herein is believed to be accurate and reliable, but it is presented without guarantee, warranty, or responsibility of any kind, expressed or implied.

Statements of suitability for certain applications are based on KEMET Electronics Corporation's ("KEMET") knowledge of typical operating conditions for such applications, but are not intended to constitute – and KEMET specifically disclaims – any warranty concerning suitability for a specific customer application or use. The Information is intended for use only by customers who have the requisite experience and capability to determine the correct products for their application. Any technical advice inferred from this Information or otherwise provided by KEMET with reference to the use of KEMET's products is given gratis, and KEMET assumes no obligation or liability for the advice given or results obtained.

Although KEMET designs and manufactures its products to the most stringent quality and safety standards, given the current state of the art, isolated component failures may still occur. Accordingly, customer applications which require a high degree of reliability or safety should employ suitable designs or other safeguards (such as installation of protective circuitry or redundancies) in order to ensure that the failure of an electrical component does not result in a risk of personal injury or property damage.

Although all product–related warnings, cautions and notes must be observed, the customer should not assume that all safety measures are indicated or that other measures may not be required.

KEMET is a registered trademark of KEMET Electronics Corporation.

Downloaded from Arrow.com.