NACEW Series
Surface Mount Aluminum Electrolytic Capacitors

AEC-Q200 QUALIFIED

ROHS/REACH COMPLIANT HALOGEN FREE

NIC COMPONENTS
Performance Passives By Design

FEATURES
- CYLINDRICAL V-CHIP CONSTRUCTION
- WIDE TEMPERATURE -55 ~ +105°C
- DESIGNED FOR REFLOW SOLDERING
- MEETS THE REQUIREMENTS OF AEC-Q200*

*Contact NIC for supporting test data

New Expanded Value Range (Up to 12,000μF)

CHARACTERISTICS

Rated Voltage Range	6.3 ~ 100Vdc**
Rated Capacitance Range	2.2 ~ 12,000μF
Operating Temp. Range	-55°C ~ +105°C (100V -40°C ~ +105 °C)
Capacitance Tolerance	±20% (M)
Max. Leakage Current After 2 Minutes @ 20°C	0.01CV or 3μA whichever is greater

Max. Tan δ @120Hz/20°C	W.V. (Vdc)		6.3	10	16	25	35	50	63	100
	S.V. (Vdc)		8	13	20	32	44	63	79	125
	4 ~ 6.3mm Dia.		0.24	0.20	0.16	0.14	0.12	0.10	0.12	0.10
	8 & larger	C ≤ 1,000μF	0.28	0.24	0.20	0.16	0.14	0.12	0.12	0.10
		C = 1,500μF	0.28	-	0.20	-	0.14	0.12	-	-
		C = 2,200μF, 2,700μF	-	0.26	-	0.18	0.16	-	-	-
		C = 3,300μF, 3,900μF	0.32	-	0.24	0.20	-	-	-	-
		C = 4,700μF	-	0.30	0.26	-	-	-	-	-
		C = 5,600μF	-	-	0.28	-	-	-	-	-
		C = 6,800μF	0.38	0.34	-	-	-	-	-	-
		C = 8,200μF	-	0.38	-	-	-	-	-	-
		C = 10,000μF	0.46	-	-	-	-	-	-	-
		C = 12,000μF	0.50	-	-	-	-	-	-	-
Low Temperature Stability Impedance Ratio @ 120Hz	W.V. (Vdc)		6.3	10	16	25	35	50	63	100
	Z-40°C/Z+20°C		3	3	2	2	2	2	2	3
	Z-55°C/Z+20°C		8	6	4	4	3	3	3	-

Load Life Test	4 ~ 6.3mm Dia. & 10x8mm +105°C 1,000 hours	Capacitance Change	Within ± 25% of initial measured value
		Tan δ	Less than 200% of specified max. value
	8 ~ 16mm Dia. +105°C 2,000 hours	Leakage Current	Less than specified max. value

PART NUMBER SYSTEM

NACEW 331 M 35V 10x10.5 TR 15 Y F

- F — RoHS Compliant
- Y — Optional: Suitable for automotive equipment, sourced to special production and inspection at IATF-16949 certified production site
- 15 — Reel Size (See Standard Values Tables)
- TR — Tape & Reel
- 10x10.5 — Size in mm
- 35V — Working Voltage
- M — Tolerance Code M=20%
- 331 — Capacitance Code in mF, first 2 digits are significant Third digit is no. of zeros, "R" indicates decimal for values under 10μF
- NACEW — Series

Case Diameter	Termination Material
4 ~ 10mm ϕ	97% Sn, 3% Bi
12.5mm	99.3% Sn, 0.7% Bi
16mm	100% Sn

Downloaded from Arrow.com.

NACEW Series
Surface Mount Aluminum Electrolytic Capacitors

AEC-Q200 QUALIFIED

ROHS/REACH COMPLIANT HALOGEN FREE

NIC COMPONENTS
Performance Passives By Design

STANDARD VALUES, CASE SIZES AND SPECIFICATIONS

NIC Part Number	Cap. (µF)	W.V. (Vdc)	Dissipation Factor (Tan δ)	Max. Ripple Current (mA) +105°C/120Hz	Maximum ESR (Ω) +20°C/120Hz	Load Life Hours @ +105°C
NACEW220M6.3V4X5.5TR15F	22	6.3	0.24	22	18.1	1,000
NACEW330M6.3V5X5.5TR13F	33		0.24	27	12.1	1,000
NACEW470M6.3V5X5.5TR13F	47		0.24	33	8.47	1,000
NACEW101M6.3V6.3X5.5TR13F	100		0.24	50	3.98	1,000
NACEW221M6.3V6.3X6.3TR15F	220		0.24	67	1.81	1,000
NACEW331M6.3V6.3X8TR15F	330		0.24	105	1.21	1,000
NACEW471M6.3V8X10.5TR15F	470		0.28	210	0.99	2,000
NACEW681M6.3V8X10.5TR15F	680		0.28	210	0.68	2,000
NACEW681M6.3V10X8TR15F	680		0.28	210	0.68	1,000
NACEW102M6.3V8X10.5TR15F	1000		0.28	280	0.46	2,000
NACEW152M6.3V10X10.5TR15F	1500		0.28	310	0.31	2,000
NACEW332M6.3V12.5X14TR15F	3300		0.32	520	0.14	2,000
NACEW682M6.3V16X17TR15F	6800		0.38	930	0.093	2,000
NACEW103M6.3V18X17.5TR15F	10000		0.46	1200	0.076	2,000
NACEW123M6.3V18X22TR15F	12000		0.50	1350	0.069	2,000
NACEW220M10V5X5.5TR13F	22	10	0.20	25	15.1	1,000
NACEW330M10V5X5.5TR13F	33		0.20	30	10.1	1,000
NACEW470M10V6.3X5.5TR13F	47		0.20	41	7.06	1,000
NACEW151M10V6.3X6.3TR15F	150		0.20	62	2.21	1,000
NACEW221M10V6.3X8TR15F	220		0.20	105	1.51	1,000
NACEW331M10V8X10.5TR15F	330		0.24	195	1.21	2,000
NACEW471M10V8X10.5TR15F	470		0.24	210	0.85	2,000
NACEW471M10V10X8TR15F	470		0.24	210	0.85	1,000
NACEW102M10V10X10.5TR15F	1000		0.24	310	0.40	2,000
NACEW222M10V12.5X14TR15F	2200		0.24	510	0.18	2,000
NACEW472M10V16X17TR15F	4700		0.24	880	0.11	2,000
NACEW682M10V18X17.5TR15F	6800		0.34	1150	0.083	2,000
NACEW822M10V18X22TR15F	8200		0.38	1350	0.077	2,000
NACEW100M16V4X5.5TR15F	10	16	0.16	18	26.5	1,000
NACEW220M16V5X5.5TR13F	22		0.16	27	12.1	1,000
NACEW330M16V6.3X5.5TR13F	33		0.16	40	8.04	1,000
NACEW470M16V6.3X5.5TR13F	47		0.16	48	5.65	1,000
NACEW101M16V6.3X5.5TR13F	100		0.16	60	2.66	1,000
NACEW151M16V6.3X8TR15F	150		0.16	95	1.77	1,000
NACEW221M16V6.3X8TR15F	220		0.16	105	1.21	1,000
NACEW331M16V8X10.5TR15F	330		0.20	195	1.00	2,000
NACEW331M16V10X8TR15F	330		0.20	195	1.00	1,000
NACEW471M16V8X10.5TR15F	470		0.20	230	0.71	2,000
NACEW681M16V10X10.5TR15F	680		0.20	310	0.49	2,000
NACEW152M16V12.5X14TR15F	1500		0.20	500	0.23	2,000
NACEW332M16V16X17TR15F	3300		0.20	840	0.12	2,000
NACEW472M16V18X17.5TR15F	4700		0.26	1090	0.092	2,000
NACEW562M16V18X22TR15F	5600		0.28	1300	0.083	2,000
NACEW4R7M25V4X5.5TR15F	4.7	25	0.14	13	49.4	1,000
NACEW100M25V5X5.5TR13F	10		0.14	20	23.2	1,000
NACEW220M25V6.3X5.5TR13F	22		0.14	36	10.6	1,000
NACEW330M25V6.3X5.5TR13F	33		0.14	44	7.04	1,000
NACEW470M25V6.3X6.3TR15F	47		0.14	48	4.95	1,000
NACEW101M25V6.3X8TR15F	100		0.14	91	2.32	1,000
NACEW151M25V8X10.5TR15F	150		0.16	140	1.77	2,000
NACEW221M25V8X10.5TR15F	220		0.16	175	1.21	2,000
NACEW221M25V10X8TR15F	220		0.16	175	1.21	1,000
NACEW331M25V8X10.5TR15F	330		0.16	220	0.80	2,000
NACEW471M25V10X10.5TR15F	470		0.16	300	0.57	2,000
NACEW102M25V12.5X14TR15F	1000		0.16	460	0.27	2,000
NACEW222M25V16X17TR15F	2200		0.16	805	0.14	2,000
NACEW332M25V18X17.5TR15F	3300		0.20	1040	0.10	2,000
NACEW392M25V18X22TR15F	3900		0.20	1280	0.085	2,000

For Automotive Equipment see part number system

Downloaded from Arrow.com.

NACEW Series
Surface Mount Aluminum Electrolytic Capacitors

AEC-Q200 QUALIFIED

ROHS/REACH COMPLIANT HALOGEN FREE

NIC COMPONENTS
Performance Passives By Design

STANDARD VALUES, CASE SIZES AND SPECIFICATIONS

NIC Part Number	Cap. (µF)	W.V. (Vdc)	Dissipation Factor (Tan δ)	Max. Ripple Current (mA) +105°C/120Hz	Maximum ESR (Ω) +20°C/120Hz	Load Life Hours @ +105°C
NACEW4R7M35V4X5.5TR15F	4.7	35	0.12	14	42.3	1,000
NACEW100M35V5X5.5TR13F	10		0.12	21	19.9	1,000
NACEW220M35V6.3X5.5TR13F	22		0.12	38	9.05	1,000
NACEW330M35V6.3X6.3TR15F	33		0.12	42	6.04	1,000
NACEW470M35V6.3X6.3TR15F	47		0.12	49	4.24	1,000
NACEW101M35V6.3X8TR15F	100		0.12	84	2.32	1,000
NACEW151M35V8X10.5TR15F	150		0.14	155	1.55	2,000
NACEW151M35V10X8TR15F	150		0.14	155	1.55	1,000
NACEW221M35V8X10.5TR15F	220		0.14	190	1.06	2,000
NACEW331M35V10X10.5TR15F	330		0.14	300	0.70	2,000
NACEW471M35V12.5X14TR15F	470		0.14	410	0.49	2,000
NACEW681M35V12.5X14TR15F	680		0.14	430	0.34	2,000
NACEW102M35V16X17TR15F	1000		0.14	700	0.23	2,000
NACEW152M35V16X17TR15F	1500		0.14	740	0.15	2,000
NACEW222M35V18X17.5TR15F	2200		0.16	950	0.12	2,000
NACEW272M35V18X22TR15F	2700		0.16	1200	0.098	2,000
NACEW2R2M50V4X5.5TR15F	2.2	50	0.10	11	75.4	1,000
NACEW3R3M50V4X5.5TR15F	3.3		0.10	13	50.3	1,000
NACEW4R7M50V5X5.5TR13F	4.7		0.10	16	35.3	1,000
NACEW100M50V6.3X5.5TR13F	10		0.10	24	16.6	1,000
NACEW220M50V6.3X6.3TR15F	22		0.10	32	7.64	1,000
NACEW330M50V6.3x8TR15F	33		0.10	60	5.03	1,000
NACEW470M50V6.3x8TR15F	47		0.10	63	3.53	1,000
NACEW101M50V8x10.5TR15F	100		0.12	140	1.99	2,000
NACEW221M50V10X10.5TR15F	220		0.12	220	0.91	2,000
NACEW102M50V16X17TR15F	1000		0.12	655	0.20	2,000
NACEW152M50V18X22TR15F	1500		0.12	1100	0.13	2,000
NACEW2R2M63V4X5.5TR15F	2.2	63	0.12	11	90.5	1,000
NACEW3R3M63V4X5.5TR15F	3.3		0.12	14	60.3	1,000
NACEW4R7M63V5X5.5TR13F	4.7		0.12	16	42.3	1,000
NACEW100M63V6.3X5.5TR13F	10		0.12	24	19.9	1,000
NACEW220M63V6.3X8TR15F	22		0.12	49	9.04	1,000
NACEW330M63V8X10.5TR15F	33		0.12	112	6.03	1,000
NACEW470M63V8X10.5TR15F	47		0.12	119	4.24	1,000
NACEW101M63V10X10.5TR15F	100		0.12	196	1.99	2,000
NACEW221M63V12.5X14TR15F	220		0.12	287	0.91	2,000
NACEW471M63V16X17TR15F	470		0.12	630	0.42	2,000
NACEW681M63V18X17.5TR15F	680		0.12	750	0.29	2,000
NACEW102M63V18X22TR15F	1000		0.12	900	0.20	2,000
NACEW4R7M100V6.3X6.3TR15F	4.7	100	0.10	25	35.3	1,000
NACEW100M100V6.3X8TR15F	10		0.10	35	16.6	1,000
NACEW220M100V8X10.5TR15F	22		0.10	84	7.64	2,000
NACEW330M100V10x10.5TR15F	33		0.10	133	5.03	2,000
NACEW470M100V12.5X14TR15F	47		0.10	240	3.53	2,000
NACEW151M100V16X17TR15F	150		0.10	500	1.10	2,000
NACEW221M100V18X17.5TR15F	220		0.10	650	0.75	2,000
NACEW331M100V18X22TR15F	330		0.10	700	0.50	2,000

For Automotive Equipment see part number system

Downloaded from Arrow.com.

NACEW Series
Surface Mount Aluminum Electrolytic Capacitors

AEC-Q200 QUALIFIED

ROHS/REACH COMPLIANT HALOGEN FREE

NIC COMPONENTS
Performance Passives By Design

RIPPLE CURRENT FREQUENCY CORRECTION FACTOR

Frequency (Hz)	100 > f ≤ 1K	1K > f ≤ 10K	10K < 100K	f ≥ 100K
C ≤ 4.7µF	1.00	1.30	1.50	1.80
4.7µF ≤ 33µF	1.00	1.20	1.30	1.45
33µF < 12,000µF	1.00	1.10	1.20	1.30

DIMENSIONS (mm)

Case Size	Dϕ ±0.5	L max.	A ±0.2	B ±0.2	I ±0.2	W	P ±0.2
4x5.5	4.0	5.5	4.3	4.3	2.0	0.5 ~ 0.8	1.0
4x6.3	4.0	6.3	4.3	4.3	2.0	0.5 ~ 0.8	1.0
5x5.5	5.0	5.5	5.3	5.3	2.1	0.5 ~ 0.8	1.4
6.3x5.5	6.3	5.5	6.6	6.6	2.5	0.5 ~ 0.8	2.2
6.3x6.3	6.3	6.3	6.6	6.6	2.5	0.5 ~ 0.8	2.2
6.3x8	6.3	8.0	6.6	6.6	2.5	0.5 ~ 0.8	2.2
8x6.5	8.0	6.5	8.3	8.3	3.4	0.5 ~ 0.8	2.2
8x10.5	8.0	10.5	8.3	8.3	2.9	0.7 ~ 1.1	3.2
10x8	10.0	8.0	10.3	10.3	3.2	0.7 ~ 1.4	4.6
10x10.5	10.0	10.5	10.3	10.3	3.2	0.7 ~ 1.4	4.6
12.5x14	12.5	14.0	12.8	12.8	4.5	1.0 ~ 1.4	4.6
16x17	16.0	17.0	16.3	16.3	5.0	1.7 ~ 2.1	7.0
18x17.5	18.0	17.5	19.0	19.0	6.5	1.7 ~ 2.1	7.0
18x22	18.0	22.0	19.0	19.0	6.5	1.7 ~ 2.1	7.0

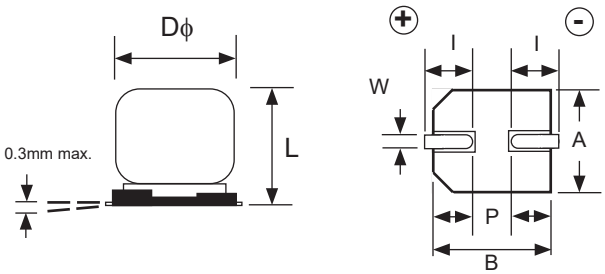

PEAK REFLOW TEMPERATURE AND DURATION

Voltage	Diameter	Peak Temperature (T) 5 seconds	Time Above +200°C (t)	Time Above +217°C (t1)	Time Above +230°C (t2)
6.3V to 63V	ϕ4 ~ 6.3	+250°C	70 sec. max	60 sec. max.	40 sec. max.
	ϕ8	+245°C	60 sec. max	50 sec. max.	30 sec. max.
	ϕ10, 12.5	+240°C	50 sec. max	40 sec. max.	20 sec. max.
	ϕ16, 18	+235°C	50 sec. max	30 sec. max.	15 sec. max.
100V	ϕ4 ~ 6.3	+250°C	60 sec. max	50 sec. max.	40 sec. max.
	ϕ8	+240°C	60 sec. max	40 sec. max.	30 sec. max.
	ϕ10	+240°C	50 sec. max	30 sec. max.	20 sec. max.
	ϕ12.5	+235°C	50 sec. max	30 sec. max.	20 sec. max.
	ϕ16, 18	+235°C	45 sec. max	20 sec. max.	10 sec. max.

RECOMMENDED LAND PATTERN DIMENSIONS (mm)

Diameter	a	b	c
ϕ4	1.0	2.6	1.8
ϕ5	1.4	3.0	1.8
ϕ6.3	1.8	3.6	1.8
ϕ8	2.8	4.1	2.1
ϕ10	4.3	4.4	2.5
ϕ12.5	4.3	5.8	2.5
ϕ16	6.6	6.5	5.0
ϕ18	6.6	7.7	5.0

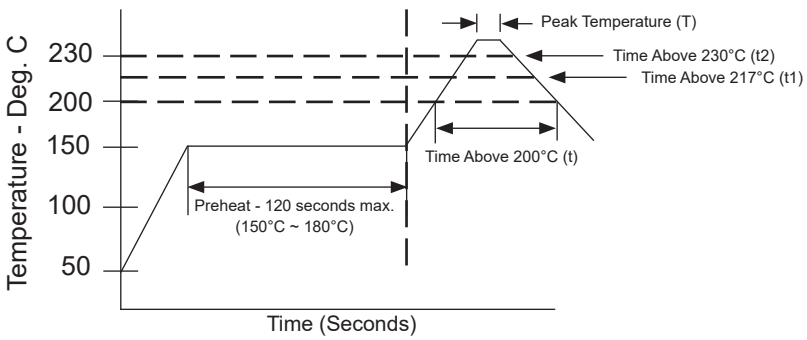

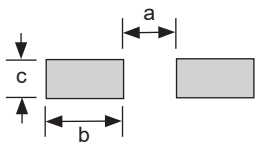

PRECAUTIONS

Please review the notes on correct use, safety and precautions found at
https://www.niccomp.com/wp-content/uploads/files/aluminum/AlumApplInfoCautions.pdf
If in doubt or uncertainty, please review your specific application - process details with
NIC's technical support personnel: tpmg@niccomp.com

Downloaded from Arrow.com.

CARRIER TAPE

Case Size	A ±0.5	B ±0.2	C ±0.3	D ±0.1	P ±0.1	T ±0.2	t max.	S ± 0.1
4x5.5	4.7	4.7	12.0	5.5	8.0	5.8	0.6	-
4x6.3	4.7	4.7	12.0	5.5	8.0	6.4	0.6	-
5x5.5	5.7	5.7	12.0	5.5	12.0	5.8	0.6	-
6.3x5.5	7.0	7.0	16.0	7.5	12.0	5.8	0.6	-
6.3x6.3	7.0	7.0	16.0	7.5	12.0	6.5	0.6	-
6.3x8	7.0	7.0	16.0	7.5	12.0	8.2	0.6	-
8x6.5	8.7	8.7	16.0	7.5	12.0	6.8	0.6	-
8x10.5	8.7	8.7	24.0	7.5	12.0	11.1	0.6	-
10x8	10.7	10.7	24.0	11.5	16.0	8.3	0.6	-
10x10.5	10.7	10.7	24.0	11.5	16.0	11.2	0.6	-
12.5x14	13.2	13.2	32.0	14.2	24.0	14.2	0.6	28.4
16x17	17.5	17.5	44.0	20.2	28.0	17.3	0.6	40.4
18x17.5	19.5	19.5	44.0	20.2	32.0	17.8	0.6	40.4
18x22	19.5	19.5	44.0	20.2	32.0	22.5	0.6	40.4

TR13 330mm (13") REEL
TR15 380mm (15") REEL

Case Size	W ±1.0	Quantity Per Reel	
		13" Reel	15" Reel
4x5.5	14.0	N/A	2,000 pcs
4x6.3	14.0	N/A	2,000 pcs
5x5.5	14.0	1,000 pcs	1,000 pcs
6.3x5.5	18.0	1,000 pcs	1,000 pcs
6.3x6.3	18.0	N/A	1,000 pcs
6.3x8	18.0	N/A	900 pcs
8x6.5	18.0	N/A	1,000 pcs
8x10.5	26.0	N/A	500 pcs
10x8	26.0	N/A	500 pcs
10x10.5	26.0	N/A	500 pcs
12.5x14	34.0	N/A	250 pcs
16x17	46.0	N/A	200 pcs
18x17.5	46.0	N/A	175
18x22	46.0	N/A	125

TAPING SPECIFICATIONS (mm)

1. Both Leader and Trailer tape: Minimum 40mm (1.57") empty carrier tape pockets.
2. Leader tape: Approximately 20cm of cover tape at leader.
3. Connection: Maximum 3 connections (slices) per reel.

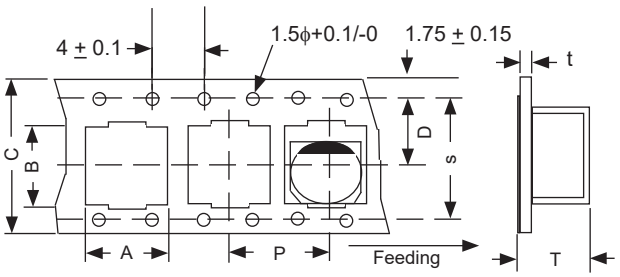

Downloaded from Arrow.com.

V-Chip 380mm Reels (TR15 suffix)

Dimensions (mm)

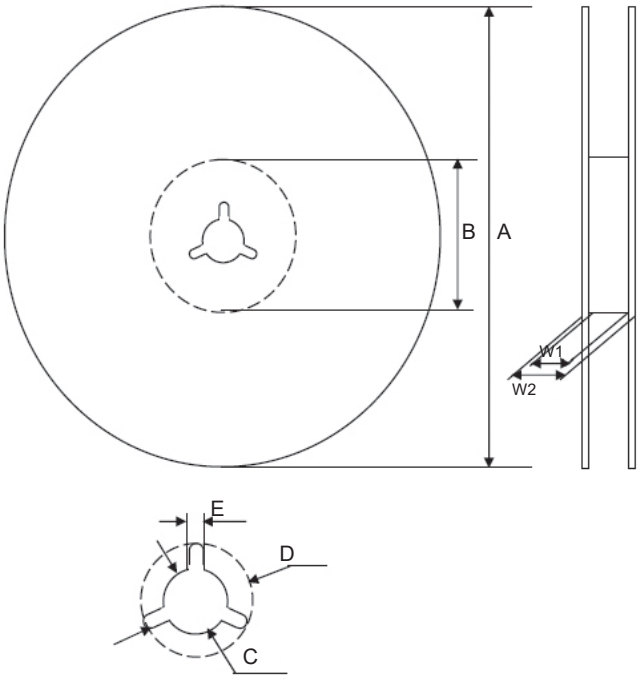

Case Size	Tape Width	W1	W2
4x5.5, 4x6.3	12.0	12.5 ~ 14.0	15.5 ~ 20.0
6.3x6.3, 6.3x8, 8x6.5	16.0	16.5 ~ 18.0	19.5 ~ 24.0
8x10.5, 10x8, 10x10.5	24.0	24.5 ~ 26.0	27.5 ~ 32.0
12.5x14	32.0	33.0 ~ 34.0	36.5 ~ 38.5
16x17, 18x17.5, 18x22	44.0	45.0 ~ 46.0	48.5 ~ 50.5

Case Size	Tape Width	A	B	C	D	E
4x5.5, 4x6.3	12.0	ϕ380 ±2	ϕ80~105	ϕ13 ±0.5	ϕ21 ±1.0	2.0 ±0.5
6.3x6.3, 6.3x8, 8x6.5	16.0					
8x10.5, 10x8, 10x10.5	24.0					
12.5x14	32.0					
16x17, 18x17.5, 18x22	44.0					

V-Chip 330mm Reels (TR13 suffix)

Dimensions (mm)

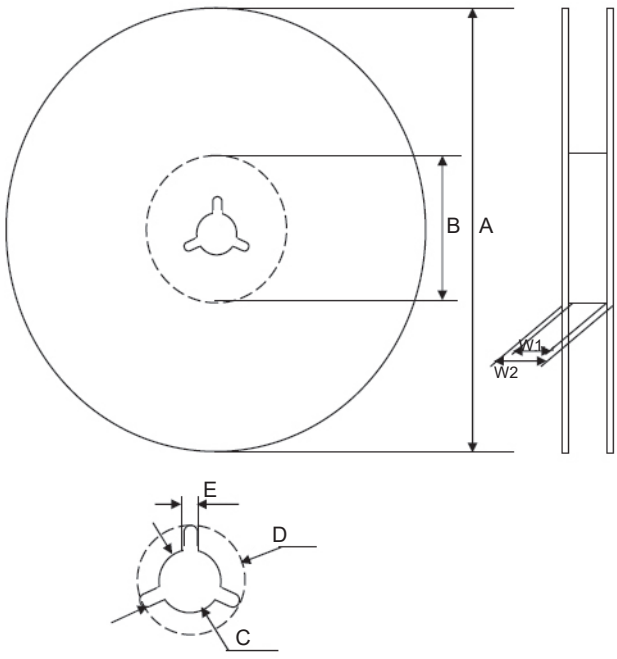

Case Size	Tape Width	W1	W2
5x5.5	12.0	12.4 ~ 14.4	15.5 ~ 20.0
6.3x5.5	16.0	16.4 ~ 18.4	19.5 ~ 24.0

Case Size	Tape Width	A	B	C	D	E
5x5.5	12.0	ϕ330 ±2	ϕ50~105	ϕ13 ±0.5	ϕ21 ±1.0	2.0 ±0.5
6.3x5.5	16.0					

Case Size	Quantity Per Reel	
	13" Reel	15" Reel
4x5.5	N/A	2,000 pcs
4x6.3	N/A	2,000 pcs
5x5.5	1,000 pcs	N/A
6.3x5.5	1,000 pcs	N/A
6.3x6.3	N/A	1,000 pcs
6.3x8	N/A	900 pcs
8x6.5	N/A	1,000 pcs
8x10.5	N/A	500 pcs
10x8	N/A	500 pcs
10x10.5	N/A	500 pcs
12.5x14	N/A	250 pcs
16x17	N/A	200 pcs
18x17.5	N/A	175 pcs
18x22	N/A	125 pcs

Downloaded from Arrow.com.