Series 66 Protective Covers

for MIL-DTL-83723 Series III Connectors

660-021 Plug Cover, Threaded Coupling

M83723/III Plug Cover, Threaded

660-021 protective cover fits MIL-DTL-83723 Series III plug connectors with threaded coupling. Aluminum or stainless steel, with stainless steel fittings. Silicone gasket.

PART NUMBER

660-021 NF 14 H 5 -15

Base P/N	660-021
Material/Finish	*See Table 1*
Shell Size	08 10 12 14 16 18 20 22 24 28
Attachment Type	N No Attachment *See Table 2 for Attachment Types*
Attachment Length	*Omit for Attachment Type N* *Length in One Inch Increments*
Attachment Ring	*Omit for Attachment Types N and SK* -00 No Ring *See Table 3 for Attachment Ring Codes*

TABLE 1 MATERIAL / FINISH

Aluminum	Stainless Steel
C Black Anodize	Z1 Passivate
M Electroless Nickel	
NF Olive Drab Cadmium	
MT Nickel-PTFE	
ZR Black Zinc-Nickel	
TZ Tin-Zinc	

TABLE 2 ATTACHMENT TYPE

D — SST Bead Chain
.125 (3.2) diameter, size 6, -65 to +200 °C

F — Wire Rope, Blue Nylon Jacket
6/6 nylon over stainless steel rope, fair flexibility, good abrasion resistance, -55 to +100 °C

G — Black Nylon Rope
Very flexible, good abrasion and fuel resistance, .094 (2.4) diameter, -55 to +100 °C

H — Wire Rope, Clear FEP Jacket
Clear FEP jacket over SST rope, fair flexibility, good abrasion resistance, .100" diameter, -65 to +200 °C

S — Sash Chain
#8 sash chain, stainless steel.
Length tolerance is ± one link .280 (7.1)

SK — Nylon Rope with Slip Knot
Very flexible, good abrasion and fuel resistance, .094 (2.4) diameter. Length includes .5" (13mm) dia. loop, -55 to +100 °C

T — SST Wire Rope, No Jacket
Good flexibility, good abrasion resistance, .047 (1.2) diameter, passivated, -65 to +200 °C

U — Wire Rope, Black Polyurethane
Stainless steel rope with black polyurethane coating, flexible, excellent abrasion resistance and resistance to fuels, .080" (2mm) diameter, -55 to +125 °C

Shell Size	E Thread	ø F Max In.	ø F Max mm.
08	.5625-24 UNEF-2A	.776	19.7
10	.6875-24 UNEF-2A	.906	23.0
12	.8750-20 UNEF-2A	1.078	27.4
14	.9375-20 UNEF-2A	1.141	29.0
16	1.0625-18 UNEF-2A	1.266	32.2
18	1.1875-18 UNEF-2A	1.375	34.9
20	1.3125-18 UNEF-2A	1.510	38.4
22	1.4375-18 UNEF-2A	1.625	41.3
24	1.5625-18 UNEF-2A	1.760	44.7
28	1.8125-16 UN-2A	2.010	51.1

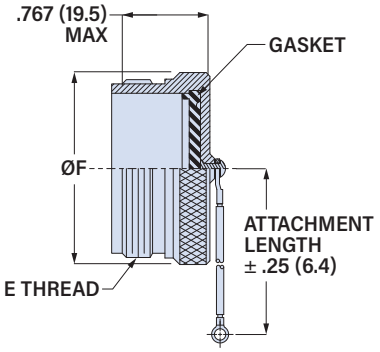

TABLE 3 ATTACHMENT RING

EYELET Code	EYELET Eyelet I.D. ± .010 (0.3)	STYLE A RING Code	STYLE A RING Ring I.D. ± .015 (0.4)	STYLE B RING Code	STYLE B RING Ring I.D. ± .015 (0.4)	SPLIT RING Code	SPLIT RING Ring I.D. ± .015 (0.4)
-06	.125 (3.2)	-095	.312 (7.9)	-10	.593 (15.1)	-50	.425 (10.8)
-01	.140 (3.6)	-100	.391 (9.9)	-12	.718 (18.2)	-52	.485 (12.3)
-09	.156 (4.0)	-101	.516 (13.1)	-13	.765 (19.4)	-54	.640 (16.3)
-05	.167 (4.2)	-103	.641 (16.3)	-14	.844 (21.4)	-56	.750 (19.1)
-02	.182 (4.6)	-104	.708 (18.0)	-15	.890 (22.6)	-58	.890 (22.6)
-03	.191 (4.9)	-105	.766 (19.5)	-17	1.015 (25.8)	-60	1.015 (25.8)
-04	.197 (5.0)	-106	.896 (22.8)	-19	1.140 (29.0)	-62	1.095 (27.8)
-07	.218 (5.5)	-107	1.016 (25.8)	-20	1.203 (30.6)	-64	1.130 (28.7)
		-108	1.141 (29.0)	-21	1.265 (32.1)	-66	1.250 (31.8)
		-208	1.203 (30.6)	-22	1.343 (34.1)	-68	1.350 (34.3)
		-109	1.266 (32.2)	-24	1.484 (37.7)	-70	1.375 (34.9)
		-110	1.391 (35.3)	-27	1.640 (41.7)	-72	1.485 (37.7)
		-111	1.521 (38.6)	-29	1.765 (44.8)	-74	1.625 (41.3)
		-112	1.641 (41.7)	-30	1.890 (48.0)	-76	1.750 (44.5)
		-113	1.766 (44.9)	-31	1.953 (49.6)	-80	1.980 (50.3)
		-114	1.891 (48.0)	-33	2.077 (52.8)	-84	2.235 (56.8)
		-115	2.078 (52.8)	-36	2.187 (55.5)	-86	2.310 (58.7)
		-116	2.406 (61.1)	-40	2.406 (61.1)	-88	2.475 (62.9)
		-117	2.510 (63.8)	-44	2.656 (67.5)	-90	2.655 (67.4)

CABLE TIE

-WS
Black 6/6 nylon cable tie 1.77 (45.0) max. wire bundle dia.

© 2022 Glenair, Inc • 1211 Air Way, Glendale, CA 91201 • 818-247-6000 • www.glenair.com • U.S. CAGE code 06324 • Circular Connector Accessories
Dimensions in Inches (millimeters) are subject to change without notice.

Downloaded from Arrow.com.