

Is Now Part of



ON Semiconductor®

To learn more about ON Semiconductor, please visit our website at
www.onsemi.com

Please note: As part of the Fairchild Semiconductor integration, some of the Fairchild orderable part numbers will need to change in order to meet ON Semiconductor's system requirements. Since the ON Semiconductor product management systems do not have the ability to manage part nomenclature that utilizes an underscore (_), the underscore (_) in the Fairchild part numbers will be changed to a dash (-). This document may contain device numbers with an underscore (_). Please check the ON Semiconductor website to verify the updated device numbers. The most current and up-to-date ordering information can be found at www.onsemi.com. Please email any questions regarding the system integration to Fairchild_questions@onsemi.com.

ON Semiconductor and the ON Semiconductor logo are trademarks of Semiconductor Components Industries, LLC dba ON Semiconductor or its subsidiaries in the United States and/or other countries. ON Semiconductor owns the rights to a number of patents, trademarks, copyrights, trade secrets, and other intellectual property. A listing of ON Semiconductor's product/patent coverage may be accessed at www.onsemi.com/site/pdf/Patent-Marking.pdf. ON Semiconductor reserves the right to make changes without further notice to any products herein. ON Semiconductor makes no warranty, representation or guarantee regarding the suitability of its products for any particular purpose, nor does ON Semiconductor assume any liability arising out of the application or use of any product or circuit, and specifically disclaims any and all liability, including without limitation special, consequential or incidental damages. Buyer is responsible for its products and applications using ON Semiconductor products, including compliance with all laws, regulations and safety requirements or standards, regardless of any support or applications information provided by ON Semiconductor. "Typical" parameters which may be provided in ON Semiconductor data sheets and/or specifications can and do vary in different applications and actual performance may vary over time. All operating parameters, including "Typicals" must be validated for each customer application by customer's technical experts. ON Semiconductor does not convey any license under its patent rights nor the rights of others. ON Semiconductor products are not designed, intended, or authorized for use as a critical component in life support systems or any FDA Class 3 medical devices or medical devices with a same or similar classification in a foreign jurisdiction or any devices intended for implantation in the human body. Should Buyer purchase or use ON Semiconductor products for any such unintended or unauthorized application, Buyer shall indemnify and hold ON Semiconductor and its officers, employees, subsidiaries, affiliates, and distributors harmless against all claims, costs, damages, and expenses, and reasonable attorney fees arising out of, directly or indirectly, any claim of personal injury or death associated with such unintended or unauthorized use, even if such claim alleges that ON Semiconductor was negligent regarding the design or manufacture of the part. ON Semiconductor is an Equal Opportunity/Affirmative Action Employer. This literature is subject to all applicable copyright laws and is not for resale in any manner.

Downloaded from Arrow.com.

FAIRCHILD SEMICONDUCTOR®

June 2011

KA393 / KA393A, KA2903
Dual Differential Comparator

Features

- Single Supply Operation: 2V to 36V
- Dual Supply Operation: ±1V to ±18V
- Allow Comparison of Voltages Near Ground Potential
- Low Current Drain: 800µA Typical
- Compatible with all Forms of Logic
- Low Input Bias Current: 25nA Typical
- Low Input Offset Current: ±5nA Typical
- Low Offset Voltage: ±1mV Typical

Description

The KA393 / KA393A / KA2903 series consists of two independent voltage comparators designed to operate from a single power supply over a wide voltage range.



Figure 1. DIP Package



Figure 2. SOIC Package

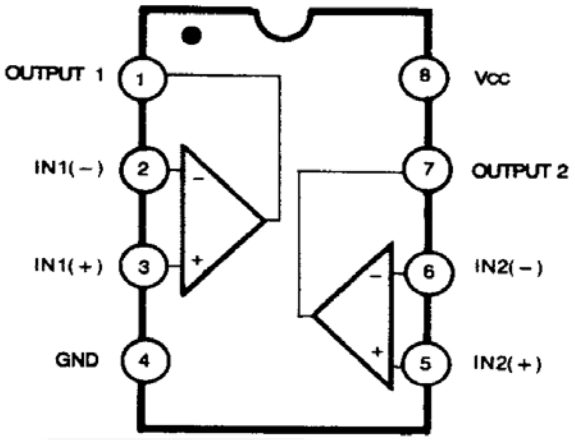

Figure 3. Block Diagram

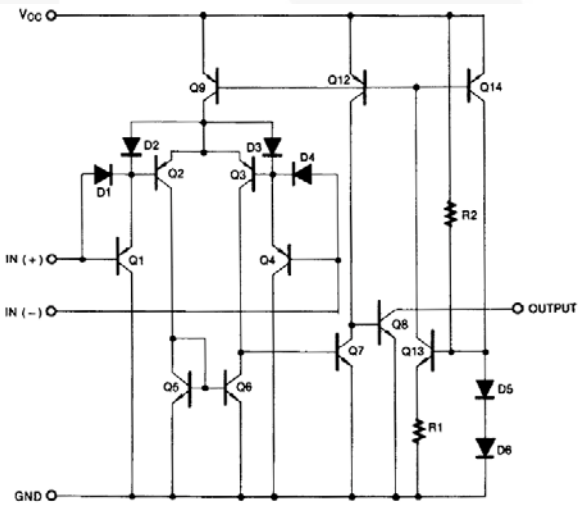

Figure 4. Schematic

Ordering Information

Part Number	Operating Temperature Range	Package	Packing Method
KA393	0 to 70°C	8-Lead DIP	Tube
KA393A	0 to 70°C		Tube
KA393DTF	0 to 70°C	8-Lead SOIC	Tape and Reel
KA393ADTF	0 to 70°C		Tape and Reel
KA2903DTF	-40 to 85°C		Tape and Reel

© 2001 Fairchild Semiconductor Corporation

Downloaded from Arrow.com.

Absolute Maximum Ratings

Stresses exceeding the absolute maximum ratings may damage the device. The device may not function or be operable above the recommended operating conditions and stressing the parts to these levels is not recommended. In addition, extended exposure to stresses above the recommended operating conditions may affect device reliability. The absolute maximum ratings are stress ratings only.

Symbol	Parameter		Min.	Max.	Unit
V_{CC}	Power Supply Voltage		±18	36	V
$V_{I(DIFF)}$	Differential Input Voltage			36	V
V_I	Input Voltage		-0.3	+36.0	V
	Output Short Circuit to GND		Continuous		
P_D	Power Dissipation, T_A = 25°C	8-DIP		1040	mW
		8-SOIC		480	
T_{OPR}	Operating Temperature	KA393 / KA393A	0	+70	°C
		KA2903	-40	+85	
T_{STG}	Storage Temperature		-65	+150	°C
$R\Theta_{JA}$	Thermal Resistance, Junction-to-Ambient	8-DIP		120	°C/W
		8-SOIC		260	
ESD	Electrostatic Discharge Capability	Human Body Model, JESD22-A114		1000	V
		Charged Device Model, JESD22-C101		2000	

© 2001 Fairchild Semiconductor Corporation

Downloaded from Arrow.com.

Electrical Characteristics

V_{CC} = 5V and T_A = 25°C, Unless otherwise specified.

Symbol	Parameter		Conditions	Min.	Typ.	Max.	Unit
V_{IO}	Input Offset Voltage	KA393	$V_{O(P)}$ =1.4V, R_S =0Ω		±1	±5	mV
			V_{CM}= 0 to1.5V, T_A= 0 to +70°C			±9	
		KA393A	$V_{O(P)}$ =1.4V, R_S =0Ω		±1	±2	
			V_{CM}= 0 to1.5V, T_A= 0 to +70°C			±4	
I_{IO}	Input Offset Current		T_A=25°C		±5	±50	nA
			T_A= 0 to +70°C			±150	
I_{BIAS}	Input Bias Current		T_A=25°C		65	250	nA
			T_A= 0 to +70°C			400	
$V_{I(R)}$	Input Common-Mode Voltage Range		T_A=25°C	0		V_{CC}-1.5	V
			T_A= 0 to +70°C	0		V_{CC}-2.0	
I_{CC}	Supply Current		R_L = ∞, V_{CC} = 5V		0.6	1.0	mA
			R_L = ∞, V_{CC} = 30V		0.8	2.5	
V_G	Voltage Gain		V_{CC} =15V, R_L≥15KΩ, (for Large $V_{O(P-P)}$ Swing)	50	200		V/mV
t_{LRES}	Large Signal Response Time		V_I =TTL Logic Swing V_{REF} =1.4V, V_{RL} =5V, R_L =5.1KΩ		350		ns
t_{RES}	Response Time		V_{RL} =5V, R_L =5.1KΩ		1.4		µs
I_{SINK}	Output Sink Current		$V_{I(-)}$ ≥ 1V, $V_{I(+)}$ = 0V, $V_{O(P)}$ ≤ 1.5V	6	18		mA
V_{SAT}	Output Saturation Voltage		$V_{I(-)}$ ≥ 1V, $V_{I(+)}$ =0V		160	400	mV
			I_{SINK}=4mA, T_A= 0 to +70°C			700	
$I_{O(LKG)}$	Output Leakage Current		$V_{I(-)}$ = 0V, $V_{I(+)}$ = 1V, $V_{O(P)}$ = 5V		0.1		nA
			$V_{I(-)}$ = 0V, $V_{I(+)}$ = 1V, $V_{O(P)}$ = 30V			1.0	µA
KA2903							
V_{IO}	Input Offset Voltage		$V_{O(P)}$ =1.4V, R_S =0Ω		±1	±7	mV
			V_{CM}= 0 to1.5V, T_A= -40 to +85°C		±9	±15	
I_{IO}	Input Offset Current		T_A=25°C		±5	±50	nA
			T_A= -40 to +85°C		±50	±200	
I_{BIAS}	Input Bias Current		T_A=25°C		65	250	nA
			T_A= -40 to +85°C			500	
$V_{I(R)}$	Input Common-Mode Voltage Range		T_A=25°C	0		V_{CC}-1.5	V
			T_A= -40 to +85°C	0		V_{CC}-2.0	
I_{CC}	Supply Current		R_L = ∞, V_{CC} = 5V		0.6	1.0	mA
			R_L = ∞, V_{CC} = 30V		1.0	2.5	
V_G	Voltage Gain		V_{CC} =15V, R_L≥15KΩ, (for Large $V_{O(P-P)}$ Swing)	25	100		V/mV
t_{LRES}	Large Signal Response Time		V_I =TTL Logic Swing V_{REF} =1.4V, V_{RL} =5V, R_L =5.1KΩ		350		ns
t_{RES}	Response Time		V_{RL} =5V, R_L =5.1KΩ		1.5		µs
I_{SINK}	Output Sink Current		$V_{I(-)}$ ≥ 1V, $V_{I(+)}$ = 0V, $V_{O(P)}$ ≤ 1.5V	6	16		mA
V_{SAT}	Output Saturation Voltage		$V_{I(-)}$ ≥ 1V, $V_{I(+)}$ =0V		160	400	mV
			I_{SINK}=4mA, T_A= -40 to +85°C			700	
$I_{O(LKG)}$	Output Leakage Current		$V_{I(-)}$ = 0V, $V_{I(+)}$ = 1V, $V_{O(P)}$ = 5V		0.1		nA
			$V_{I(-)}$ = 0V, $V_{I(+)}$ = 1V, $V_{O(P)}$ = 30V			1.0	µA

© 2001 Fairchild Semiconductor Corporation

Downloaded from Arrow.com.

Typical Performance Characteristics

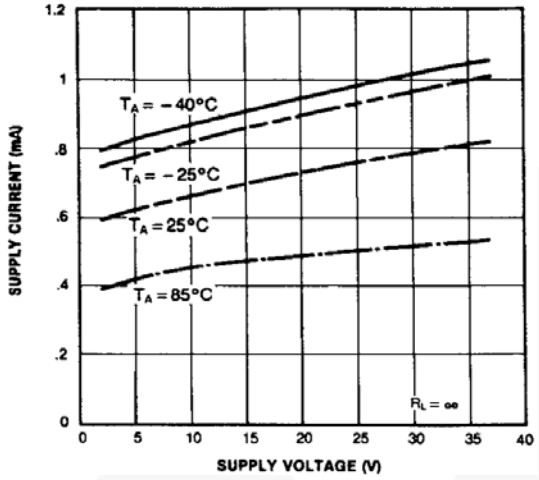

Figure 5. Supply Current vs. Supply Voltage

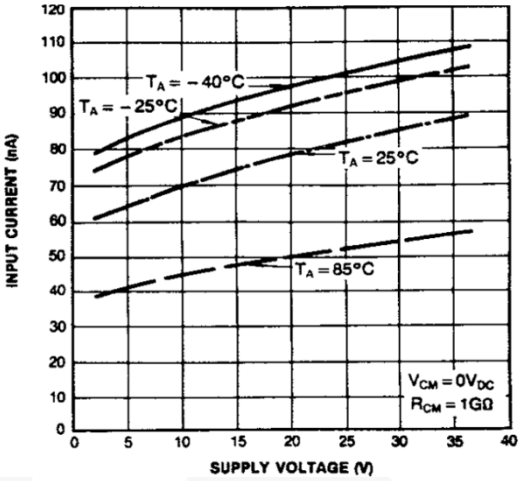

Figure 6. Input Current vs. Supply Voltage

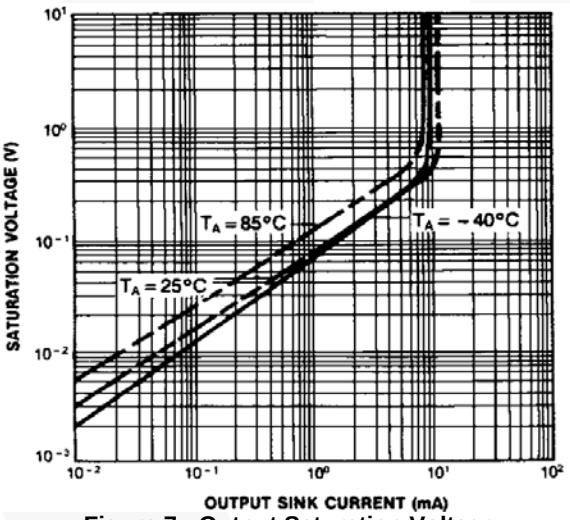

Figure 7. Output Saturation Voltage vs. Sink Current

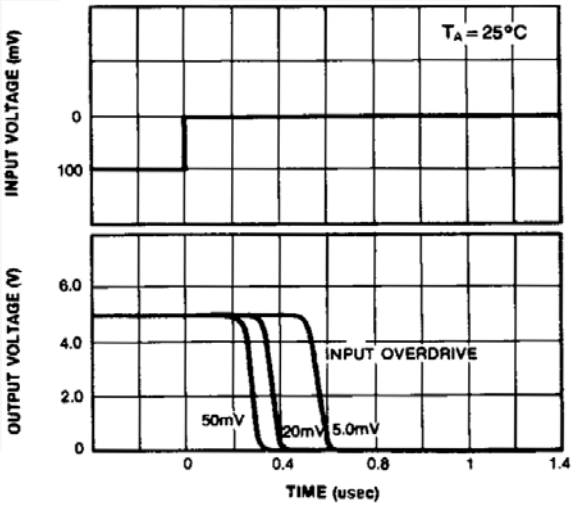

Figure 8. Response Time for Various Input Overdrive-Negative Transitions

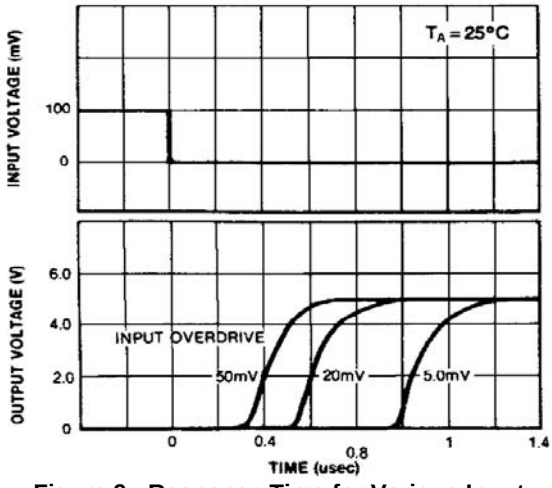

Figure 9. Response Time for Various Input Overdrive-Positive Transitions

© 2001 Fairchild Semiconductor Corporation

Downloaded from Arrow.com.

Physical Dimensions

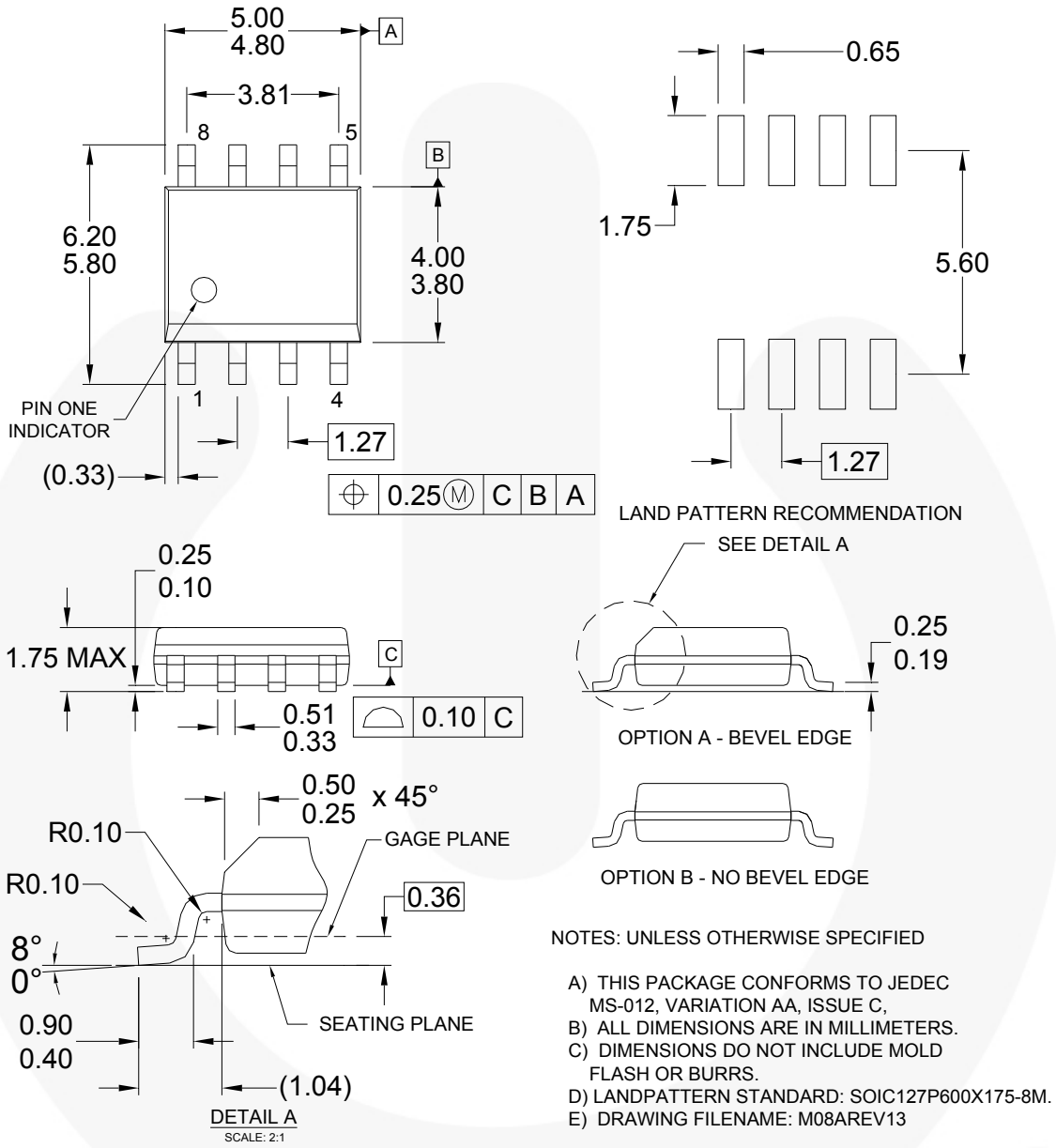

Figure 10.8-Lead, Small-Outline Integrated Circuit (SOIC), JEDEC MS-012, .150" Narrow Body

Package drawings are provided as a service to customers considering Fairchild components. Drawings may change in any manner without notice. Please note the revision and/or date on the drawing and contact a Fairchild Semiconductor representative to verify or obtain the most recent revision. Package specifications do not expand the terms of Fairchild's worldwide terms and conditions, specifically the warranty therein, which covers Fairchild products.

Always visit Fairchild Semiconductor's online packaging area for the most recent package drawings:
http://www.fairchildsemi.com/packaging/.

© 2001 Fairchild Semiconductor Corporation

Downloaded from Arrow.com.

Physical Dimensions

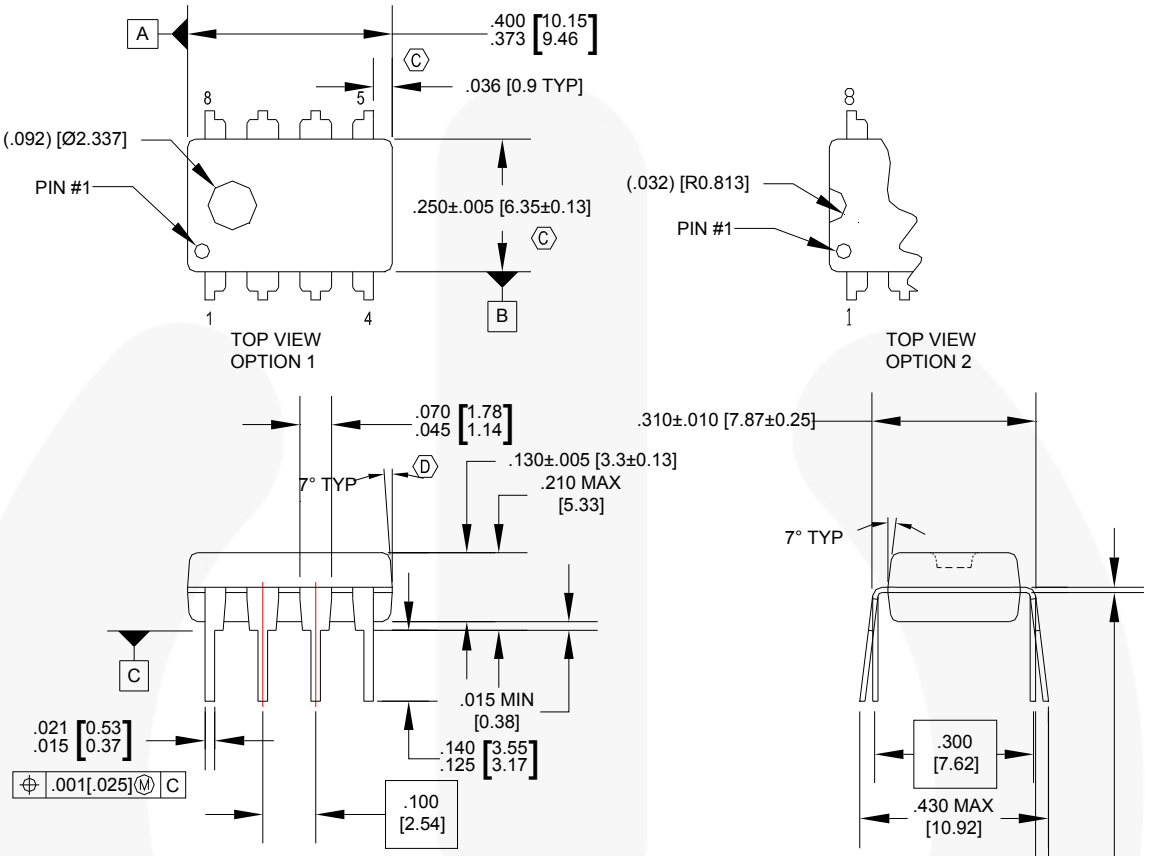

NOTES:

A. CONFORMS TO JEDEC REGISTRATION MS-001, VARIATIONS BA
B. CONTROLING DIMENSIONS ARE IN INCHES
REFERENCE DIMENSIONS ARE IN MILLIMETERS
C. DOES NOT INCLUDE MOLD FLASH OR PROTRUSIONS. MOLD FLASH OR PROTRUSIONS SHALL NOT EXCEED .010 INCHES OR 0.25MM.
D. DOES NOT INCLUDE DAMBAR PROTRUSIONS. DAMBAR PROTRUSIONS SHALL NOT EXCEED .010 INCHES OR 0.25MM.
E. DIMENSIONING AND TOLERANCING PER ASME Y14.5M-1994.

N08EREVG

Figure 1. 8-Lead, DIP, JEDEC MS-001, .300" Wide

Package drawings are provided as a service to customers considering Fairchild components. Drawings may change in any manner without notice. Please note the revision and/or date on the drawing and contact a Fairchild Semiconductor representative to verify or obtain the most recent revision. Package specifications do not expand the terms of Fairchild's worldwide terms and conditions, specifically the warranty therein, which covers Fairchild products.

Always visit Fairchild Semiconductor's online packaging area for the most recent package drawings:
http://www.fairchildsemi.com/packaging/.

© 2001 Fairchild Semiconductor Corporation

Downloaded from Arrow.com.

FAIRCHILD SEMICONDUCTOR®

TRADEMARKS

The following includes registered and unregistered trademarks and service marks, owned by Fairchild Semiconductor and/or its global subsidiaries, and is not intended to be an exhaustive list of all such trademarks.

AccuPower™
Auto-SPM™
AX-CAP™*
BitSiC®
Build it Now™
CorePLUS™
CorePOWER™
CROSSVOLT™
CTL™
Current Transfer Logic™
DEUXPEED®
Dual Cool™
EcoSPARK®
EfficientMax™
ESBC™
F®
Fairchild®
Fairchild Semiconductor®
FACT Quiet Series™
FACT®
FAST®
FastvCore™
FETBench™
FlashWriter®*
FPS™
F-PFS™
FRFET®
Global Power Resource℠
Green FPS™
Green FPS™ e-Series™
Gmax™
GTO™
IntelliMAX™
ISOPLANAR™
MegaBuck™
MICROCOUPLER™
MicroFET™
MicroPak™
MicroPak2™
MillerDrive™
MotionMax™
Motion-SPM™
mWSaver™
OptoHiT™
OPTOLOGIC®
OPTOPLANAR®
®
PDP SPM™
Power-SPM™
PowerTrench®
PowerXS™
Programmable Active Droop™
QFET®
QS™
Quiet Series™
RapidConfigure™
™
Saving our world, 1mW/W/kW at a time™
SignalWise™
SmartMax™
SMART START™
SPM®
STEALTH™
SuperFET®
SuperSOT™-3
SuperSOT™-6
SuperSOT™-8
SupreMOS®
SyncFET™
Sync-Lock™
SYSTEM GENERAL®*
The Power Franchise®
The Right Technology for Your Success™
the power franchise
TinyBoost™
TinyBuck™
TinyCalc™
TinyLogic®
TINYOPTO™
TinyPower™
TinyPWM™
TinyWire™
TranSiC®
TriFault Detect™
TRUECURRENT®*
µSerDes™
µ SerDes
UHC®
Ultra FRFET™
UniFET™
VCX™
VisualMax™
XS™

* Trademarks of System General Corporation, used under license by Fairchild Semiconductor.

DISCLAIMER

FAIRCHILD SEMICONDUCTOR RESERVES THE RIGHT TO MAKE CHANGES WITHOUT FURTHER NOTICE TO ANY PRODUCTS HEREIN TO IMPROVE RELIABILITY, FUNCTION, OR DESIGN. FAIRCHILD DOES NOT ASSUME ANY LIABILITY ARISING OUT OF THE APPLICATION OR USE OF ANY PRODUCT OR CIRCUIT DESCRIBED HEREIN; NEITHER DOES IT CONVEY ANY LICENSE UNDER ITS PATENT RIGHTS, NOR THE RIGHTS OF OTHERS. THESE SPECIFICATIONS DO NOT EXPAND THE TERMS OF FAIRCHILD'S WORLDWIDE TERMS AND CONDITIONS, SPECIFICALLY THE WARRANTY THEREIN, WHICH COVERS THESE PRODUCTS.

LIFE SUPPORT POLICY

FAIRCHILD'S PRODUCTS ARE NOT AUTHORIZED FOR USE AS CRITICAL COMPONENTS IN LIFE SUPPORT DEVICES OR SYSTEMS WITHOUT THE EXPRESS WRITTEN APPROVAL OF FAIRCHILD SEMICONDUCTOR CORPORATION.

As used herein:

1. Life support devices or systems are devices or systems which, (a) are intended for surgical implant into the body or (b) support or sustain life, and (c) whose failure to perform when properly used in accordance with instructions for use provided in the labeling, can be reasonably expected to result in a significant injury of the user.
2. A critical component in any component of a life support, device, or system whose failure to perform can be reasonably expected to cause the failure of the life support device or system, or to affect its safety or effectiveness.

ANTI-COUNTERFEITING POLICY

Fairchild Semiconductor Corporation's Anti-Counterfeiting Policy. Fairchild's Anti-Counterfeiting Policy is also stated on our external website, www.fairchildsemi.com, under Sales Support.

Counterfeiting of semiconductor parts is a growing problem in the industry. All manufacturers of semiconductor products are experiencing counterfeiting of their parts. Customers who inadvertently purchase counterfeit parts experience many problems such as loss of brand reputation, substandard performance, failed applications, and increased cost of production and manufacturing delays. Fairchild is taking strong measures to protect ourselves and our customers from the proliferation of counterfeit parts. Fairchild strongly encourages customers to purchase Fairchild parts either directly from Fairchild or from Authorized Fairchild Distributors who are listed by country on our web page cited above. Products customers buy either from Fairchild directly or from Authorized Fairchild Distributors are genuine parts, have full traceability, meet Fairchild's quality standards for handling and storage and provide access to Fairchild's full range of up-to-date technical and product information. Fairchild and our Authorized Distributors will stand behind all warranties and will appropriately address any warranty issues that may arise. Fairchild will not provide any warranty coverage or other assistance for parts bought from Unauthorized Sources. Fairchild is committed to combat this global problem and encourage our customers to do their part in stopping this practice by buying direct or from authorized distributors.

PRODUCT STATUS DEFINITIONS

Definition of Terms

Datasheet Identification	Product Status	Definition
Advance Information	Formative / In Design	Datasheet contains the design specifications for product development. Specifications may change in any manner without notice.
Preliminary	First Production	Datasheet contains preliminary data; supplementary data will be published at a later date. Fairchild Semiconductor reserves the right to make changes at any time without notice to improve design.
No Identification Needed	Full Production	Datasheet contains final specifications. Fairchild Semiconductor reserves the right to make changes at any time without notice to improve the design.
Obsolete	Not In Production	Datasheet contains specifications on a product that is discontinued by Fairchild Semiconductor. The datasheet is for reference information only.

Rev. I54

© 2001 Fairchild Semiconductor Corporation

Downloaded from Arrow.com.

ON Semiconductor and ON are trademarks of Semiconductor Components Industries, LLC dba ON Semiconductor or its subsidiaries in the United States and/or other countries. ON Semiconductor owns the rights to a number of patents, trademarks, copyrights, trade secrets, and other intellectual property. A listing of ON Semiconductor's product/patent coverage may be accessed at www.onsemi.com/site/pdf/Patent−Marking.pdf. ON Semiconductor reserves the right to make changes without further notice to any products herein. ON Semiconductor makes no warranty, representation or guarantee regarding the suitability of its products for any particular purpose, nor does ON Semiconductor assume any liability arising out of the application or use of any product or circuit, and specifically disclaims any and all liability, including without limitation special, consequential or incidental damages. Buyer is responsible for its products and applications using ON Semiconductor products, including compliance with all laws, regulations and safety requirements or standards, regardless of any support or applications information provided by ON Semiconductor. "Typical" parameters which may be provided in ON Semiconductor data sheets and/or specifications can and do vary in different applications and actual performance may vary over time. All operating parameters, including "Typicals" must be validated for each customer application by customer's technical experts. ON Semiconductor does not convey any license under its patent rights nor the rights of others. ON Semiconductor products are not designed, intended, or authorized for use as a critical component in life support systems or any FDA Class 3 medical devices or medical devices with a same or similar classification in a foreign jurisdiction or any devices intended for implantation in the human body. Should Buyer purchase or use ON Semiconductor products for any such unintended or unauthorized application, Buyer shall indemnify and hold ON Semiconductor and its officers, employees, subsidiaries, affiliates, and distributors harmless against all claims, costs, damages, and expenses, and reasonable attorney fees arising out of, directly or indirectly, any claim of personal injury or death associated with such unintended or unauthorized use, even if such claim alleges that ON Semiconductor was negligent regarding the design or manufacture of the part. ON Semiconductor is an Equal Opportunity/Affirmative Action Employer. This literature is subject to all applicable copyright laws and is not for resale in any manner.

PUBLICATION ORDERING INFORMATION

LITERATURE FULFILLMENT:
Literature Distribution Center for ON Semiconductor
19521 E. 32nd Pkwy, Aurora, Colorado 80011 USA
Phone: 303−675−2175 or 800−344−3860 Toll Free USA/Canada
Fax: 303−675−2176 or 800−344−3867 Toll Free USA/Canada
Email: orderlit@onsemi.com

N. American Technical Support: 800−282−9855 Toll Free USA/Canada
Europe, Middle East and Africa Technical Support:
Phone: 421 33 790 2910
Japan Customer Focus Center
Phone: 81−3−5817−1050

ON Semiconductor Website: **www.onsemi.com**

Order Literature: http://www.onsemi.com/orderlit

For additional information, please contact your local Sales Representative

Downloaded from Arrow.com.