XF series

Multi-axis rugged fingertip controllers • non-contacting Hall effect technology

DISTINCTIVE FEATURES

Rugged design for vehicle applications
Up to three axis
CAN bus J1939 & CANopen protocol options
USB protocol options
Panel sealed up to IP67

ENVIRONMENTAL SPECIFICATIONS

- Operating Temperature: -40 °C to +85 °C (-40 °F to 185 °F)
- Storage Temperature: -40 °C to +85 °C (-40 °F to 185 °F)
- Above Panel Sealing: Up to IP67 (subject to final specifications)
- EMC Immunity Level (V/M): EN61000-4-3
- EMC Emissions Level: EN61000-6-3:2001
- ESD: EN61000-4-2
- Output linearity: ±200 mV
- Dual output interlinearity (X/Y): ±400 mV
- Dual output interlinearity (Z): ±600 mV

SENSOR SPECIFICATIONS

- Sensor: Hall effect, single or dual
- Supply Voltage Range: 5 VDC ±0.0 1 VDC
- Supply Current: 15 mA, +10 mA per axis (single sensor)
- Reverse Polarity Max: -10 VDC
- Transient Overvoltage Max: 16 VDC
- Ratiometric Output Voltage: see output options
- Output Impedance: 2 Ω

MATERIALS

- Shaft: Stainless Steel
- Boot: Silicone
- Handles: Glass filled nylon*
- Body: Glass filled nylon

The company reserves the right to change specifications without notice.

Downloaded from Arrow.com.

XF series

Multi-axis rugged fingertip controllers • non-contacting Hall effect technology

MECHANICAL SPECIFICATIONS (X/Y AXIS)

- Break Out Force: 1.3 N (0.3 lbf)
- Operating Force: 2.8 N (0.63 lbf)
- Maximum Applied Force: 350 N (78.00 lbs)
- Deflection Angle: 36° (±18° from center)
- Expected Mechanical Life: 5 million lifecycles
  - If Z axis: 2.5 million life cycles (X and Y combined)
- Lever Action: Single spring, omnidirectional

MECHANICAL SPECIFICATIONS (Z AXIS)

- Break Out Torque: 0.09 Nm (0.80 lbf in)
- Operating Torque: 0.121 Nm (1.07 lbf in)
- Maximum Allowable Torque: 9.0 Nm (80 lbf in)
- Degrees of rotation: 60° (30° from center)
- Expected Mechanical Life: 2.5 million lifecycles
- Handle Action: Spring centering

TERMINATION (ANALOG OUTPUTS ONLY)

- The XF series (Output options AA-HH **only**) features a **Hirose DF11-12DP-2DS9 (24)** header (male receptacle) (Fig 1)
- The mating wire harness is not included but may be selected from the BUILD YOUR PART NUMBER option selection guide. This optional harness features a **Hirose DF11-12DS-2C** connector (female socket) (Fig 2) to individual stripped and tinned wire leads
- Header specifications: 12 position, 2mm pitch dual row (2x6) pin header
- Wire harness specifications: 22 AWG Teflon, 25 cm multi-conductor with heat shrink. Hirose **DF11-12DS-2C** to stripped and tinned wire leads

Fig. 1

Hirose DF11-12DP-2DS9(24) header

Fig. 2

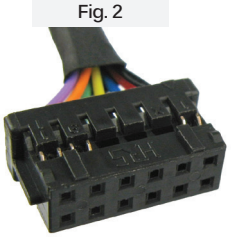

Mating wire harness fitted with Hirose DF11-12DS-2C connector

* Most handles, dependent upon configurations

The company reserves the right to change specifications without notice.

JOYSTICK HEADER - HIROSE DF11-12DP-2DS9 (24) PINOUT (FIG 1)

PIN 2	PIN 4	PIN 6	PIN 8	PIN 10	PIN 12
RED	BLUE	YELLOW	GREEN	WHITE	--
BLACK	BLU/WHT	YEL/BLK	GRN/BLK	ORANGE	VIOLET
PIN 1	PIN 3	PIN 5	PIN 7	PIN 9	PIN 11

MATING WIRE HARNESS COLOR DEFINITION (FIG 2)

HIROSE DF11-12DS-2C CONNECTOR PIN #	WIRE COLOR	JOYSTICK FUNCTION
1	Black	Ground
2	Red	Supply power
3	Blue / white	X axis (dual output)
4	Blue	X axis
5	Yellow / black	Y axis (dual output)
6	Yellow	Y axis
7	Green / black	Z axis (dual output)
8	Green	Z axis
9	Orange	Button one
10	White	Button common
11	Violet	Button two
12	--	--

Downloaded from Arrow.com.

XF series

Multi-axis rugged fingertip controllers • non-contacting Hall effect technology

MOUNTING

MOUNTING DIMENSIONS & SUGGESTED PANEL OPENING

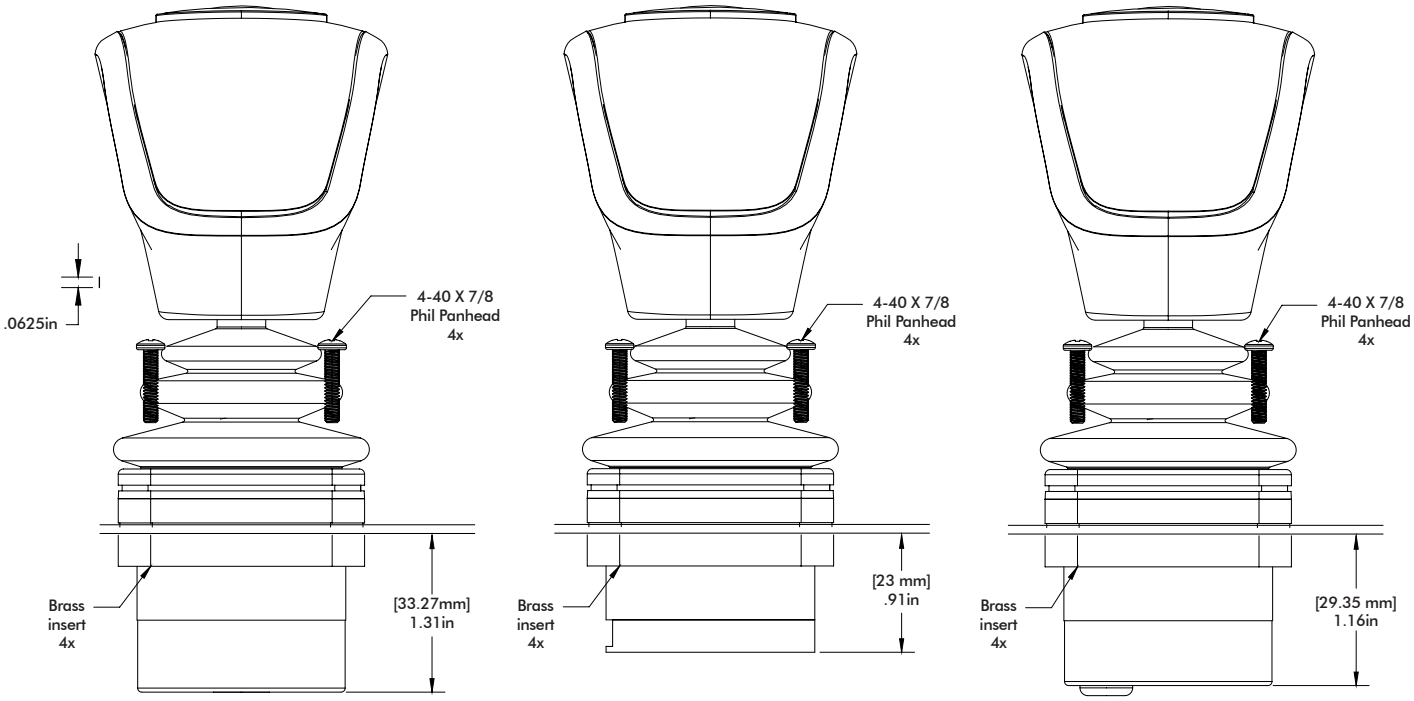

CAN bus Outputs (output options: NN-QQ)

Analog Outputs (output options: AA-HH)

Votage Regulator (output options: AA-HH,VV)

* = Recommended maximum torque: 0.1 - 0.125 Nm evenly per screw (18 oz-in).

PANEL CUT-OUT

DROP-IN MOUNT

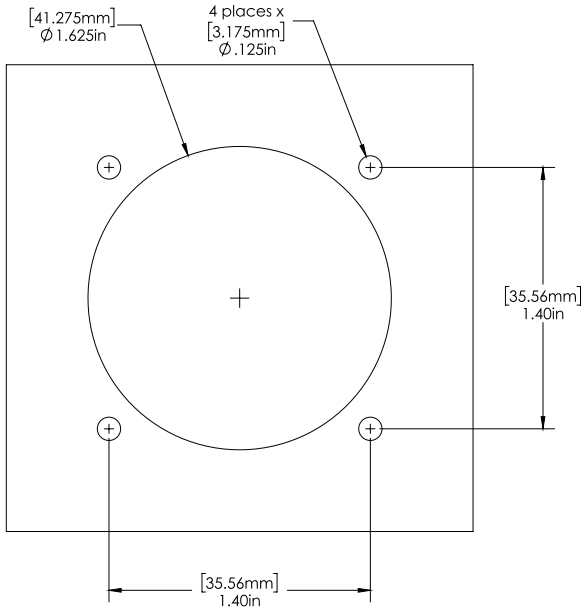

Downloaded from Arrow.com.

XF series

Multi-axis rugged fingertip controllers • non-contacting Hall effect technology

CAN J1939 INTERFACE SPECIFICATION

The XF Series joystick can be configured with a maximum of three axis and two buttons.
All axis and button data are delivered on a CAN 2.0B compliant physical interface. Two additional signals allow configuration of the controller Source Address. Controller messages are delivered per the SAEJ1939-71 message protocol.

- Supply voltage range: 6 – 35 V

CAN 2.0B INTERFACE PARAMETERS

- Baud rate: 250 Kbps
- Transmission repetition rate: 50ms
- BJMI/EJMI interval time: 20ms
- Terminating resistor: No
  (available by special request to factory)

CAN MESSAGE PROTOCOL

- Primary Axis and button data on Basic Joystick Message 1 (BJM1):
  - Priority: 3
  - Base PGN: 0xFDD6
  - Source address: 0x16
  - Data field: 8 bytes
- Redundant Axis data on Extended Joystick Message 1 (EJMI):
  - Priority: 3
  - Base PGN: 0xFDD7
  - Source address: 0x16
  - Data field: 8 bytes

CAN SOURCE ADDRESSES

Alternate source addresses may be selected by gounding combinations of the blue and/or orange wires. For further information, please see TERMINATION on page 6.

CAN SOURCE ADDRESS	ORANGE WIRE	BLUE WIRE
0x16 (default)	OPEN	OPEN
0x26	OPEN	Grounded
0x36	Grounded	OPEN
0x46	Grounded	Grounded

BJM1 DATA FIELD STRUCTURE:

START POSITION (BYTE/BIT)	LENGTH (BITS)	FUNCTION
1/1	2	Primary X-axis neutral position status
1/3	2	Primary X-axis left position status
1/5	2	Primary X-axis right position status
1/7 to 2/8	10	Primary X-axis position data
3/1	2	Primary Y-axis neutral position status
3/3	2	Primary Y-axis down position status
3/5	2	Primary Y-axis up position status
3/7 to 4/8	10	Primary Y-axis position data
6/5	2	Button 2 status
6/7	2	Button 1 status

EJM1 DATA FIELD STRUCTURE:

START POSITION (BYTE/BIT)	LENGTH (BITS)	FUNCTION
5/1	2	Primary Z-axis neutral position status
5/3	2	Primary Z-axis counter-clockwise position status
5/5	2	Primary Z-axis clockwise position status
5/7 TO 6/8	10	Primary Z-axis position data

CUSTOM CAN BUS J1939 FIRMWARE*

- Baud rate: 125 Kbps, 500 Kbps, 1 Mbps (250 Kbps default)
- Custom CAN addresses
- Custom CAN bus output

* Custom CAN bus firmware available upon request.

Downloaded from Arrow.com.

XF series

Multi-axis rugged fingertip controllers • non-contacting Hall effect technology

CANOPEN INTERFACE SPECIFICATION

- Supply voltage range: 6 – 35 V

CANOPEN INTERFACE PARAMETERS*

- Baud rate: 250 Kbps
- Node ID: 20h
- Buttons: 1A0H (180H + NODE ID)
- Analog (axis) outputs: 2A0h (280h + Node ID)
- Heartbeat (500ms): 720h (700h + Node ID)
- Axis resolution: 8 bit
- Network Management: Auto start enabled

CANOPEN NODE ID SELECTION

Alternate NODE IDs may be selected by gounding the blue and/or orange wires. For further information, please see TERMINATION on page 6.

NODE ID SELECT	ORANGE WIRE	BLUE WIRE
20H (default)	OPEN	OPEN
21H	OPEN	Grounded
22H	Grounded	OPEN
23H	Grounded	Grounded

CANOPEN BUTTON OUTPUT CONFIGURATION

Button status is transmitted in the one byte data field of frames with an identifier of 1A0 (default)	
Identifier	Byte 0
1A0	Buttons (2:0)

CANOPEN ANALOG OUTPUT CONFIGURATION

Eight bit analog data is transmitted in the three byte data field of frames with an identifier of 2A0 (default)			
Identifier	Byte 0	Byte 1	Byte 2
2A0	A_IN0 (7:0)	A_IN1 (7:0)	A_IN2 (7:0)

CUSTOM CANOPEN FIRMWARE*

- Baud rate: 125 Kbps, 500 Kbps, 1 Mbps (250 Kbps default)
- Custom Node IDs (default 20 hexadecimal)
- 10-bit axis resolution
- 12-bit axis resolution
- Signed resolution
- Custom CANopen output

CANOPEN LSS INTERFACE SPECIFICATION

The CANopen LSS interface option follows the CiA305 and CiA401 standards for CAN in automation. The node ID, baud rate and additional configurations can be set and stored in the EEPROM by Service Data Object. The default settings are as follows:

CANOPEN LSS INTERFACE SPECIFICATION

CANOPEN INTERFACE PARAMETERS*

- Baud rate: 250 Kbps
- Node ID: 20h (default)
- Buttons: 1A0H (180H + NODE ID)
- Analog (axis) outputs: 2A0h (280h + Node ID)
- Heartbeat (500ms): 720h (700h + Node ID)
- Axis resolution: 10-bit
- Network Management: Auto start enabled

CANOPEN LSS BUTTON OUTPUT CONFIGURATION

Button status is transmitted in the one byte data field of frames with an identifier of 1A0 (default)	
Identifier	Byte 0
1A0	Buttons (2:0)

CANOPEN LSS ANALOG OUTPUT CONFIGURATION

Ten bit analog data is transmitted in the six byte data field of frames with an identifier of 2A0 (default)			
Identifier	Byte 0	Byte 1	Byte 2
2A0	A_IN0 (7:0)	A_IN1 (9:8)	A_IN2 (7:0)
Identifier	Byte 3	Byte 4	Byte 5
2A0	A_IN1 (9:8)	A_IN2 (7:0)	A_IN2 (9:8)

* Custom CAN bus firmware available upon request.

Downloaded from Arrow.com.

XF series

Multi-axis rugged fingertip controllers • non-contacting Hall effect technology

TERMINATION (CAN OUTPUTS ONLY)

- XF series joysticks configured with CAN outputs (Output options NN-QQ only) feature a JST B06B-PASK-1(LF)(SN) locking header (male receptacle). An optional mating wire harness may be specified from the part number configuration guide.
- Header specifications: JST B06B-PASK-1(LF)(SN) - 6 position, 2 mm pitch, single row locking header.
- Optional Mating wire harness specifications: Six conductor, 22AWG, 45 cm (18") PTFE, JST PAP-06V-S locking connector to stripped and tinned wire leads.

HEADER PINOUT AND MATING WIRE HARNESS COLOR DEFINITION

WIRING CHART			
DEUTSCH CONNECTOR	JST CONNECTOR	WIRE COLOR	FUNCTION
1	1	WHITE	CAN LO
2	2	GREEN	CAN HI
3	3	BLUE	ID SELECT LSB
4	4	ORANGE	ID SELECT MSB
5	5	BLACK	GND
6	6	RED	VDC+

JST B06B-PASK-1(LF)(SN) HEADER

VOLTAGE REGULATOR SPECIFICATIONS

The Voltage Regulator allows APEM's Hall effect joysticks to operate with a range of supply voltages.

Voltage Regulator - Unipolar

- Supply Voltage Range: 8-35 VDC
- Output Voltage Range: see output options
- Maximum Current: 90 mA

Voltage Regulator - Bipolar

- Supply Voltage Range: 12-35 VDC
- Output Voltage Range: ±10 VDC
- Maximum Current: 90mA

Termination (flying leads)

- 28 AWG 20.32 cm ±2.54 cm (8.0" ±1.0") PTFE

* Custom CAN bus firmware available upon request.

Downloaded from Arrow.com.

XF series

Multi-axis rugged fingertip controllers • non-contacting Hall effect technology

USB SPECIFICATION

- Supply Voltage Range: 5.00 VDC
- Maximum current: 70 mA
- USB version: 2.0

USB GAME CONTROLLER

Featuring USB 2.0 HID compliant interface, APEM's USB joysticks are recognized as standard HID "game controller" devices. Adhering to the HID specification, APEM's USB joysticks are plug-and-play with most versions of Windows. Joystick button and axis assignments are dependent upon the controlled application.

Features

- USB 2.0 HID compliant "game controller" device
- Easy to install and operate
- Functions determined by controlled application
- 12-bit (0 to 4095) axis resolution

Termination (supplied cable)

- Overmolded USB Male Type A to mini B connector (182 cm / 6.0')

USB CURSOR EMULATION

The Cursor Emulation option converts multi-axis joystick output into a mouse or cursor control device. The Cursor Emulation option is ideal for vehicle applications subjected to dirt and high vibration which makes operating a traditional cursor control device difficult.

Features

- HID compliant "mouse" device

Button Function

- B1: Left Mouse Click
- B2: Right Mouse Click

Termination (supplied cable)

- USB Male Type A Connector (182 cm / 6.0')

SUPPORTED OPERATING SYSTEMS: USB GAME CONTROLLER AND CURSOR EMULATION

Windows Operating System

- Windows 7
- Windows 8.1
- Windows 10

Linux Operating System

APEM's USB joysticks are compatible with Linux, although system compatibility is not guaranteed. The user is responsible for verifying specific Linux OS compatibility.

Custom Firmware

Custom configurations and firmware is available upon request. Available options include:

- 8-bit axis resolution
- 10-bit axis resolution
- Signed bit axis resolution
- Custom USB product name

Downloaded from Arrow.com.

XF series

Multi-axis rugged fingertip controllers • non-contacting Hall effect technology

BUILD YOUR PART NUMBER

XF			N						N			A		

SERIES

HANDLE

27	1 pushbutton[7]

BUTTONS

B	NO & NC contact

HANDLE ROTATION

N	Locked Z axis

LIMITER PLATE

D	Diamond	◇
T	Square	□
R	Round	○
Y	Slotted	‖
X	Slotted	—
P	Plus [5]	✚

CENTERING

S	Spring Centering

OPERATING TORQUE

A	.04 Nm
B	.05 Nm
C	.06Nm[6]
D	.07 Nm[6]

MECHANICAL FEATURES

N	None
G	Guided feel

OUTPUT

AA	0V-5V
BB	0.25V-4.75V
CC	0.5V-4.5V
DD	1V-4V
EE	(0V-5V)(5V-0V)
FF	(0.25V - 4.75V) (4.75V - 0.25V)
GG	(0.5V - 4.5V) (4.5V - 0.5V)
HH	(1V - 4V) (4V - 1V)
VV	±10V
NN	CAN bus J1939-71
PP	CANopen
QQ	CANopen LSS
UU	USB joystick, Game Controller
TT	USB mouse, Cursor Control

SEALING

E	IP67 as standard

TERMINATION/ MATING WIRE HARNESS

A	None: No mating wire harness provided
B	Outputs AA - HH - Mating wire harness to flying leads for analog outputs. No connector [2]
C	Output NN - QQ - Mating wire harness to flying leads for CAN bus outputs. No connector [3]
D	Output NN - QQ - Mating wire harness with Deutsch DTM04-6P connector for CAN bus outputs.
E	Output UU - TT – Overmolded USB cable – Male A to Mini B / 6' [4]

SPECIAL OPTIONS

V	Voltage Regulator [1]

1: Available for output options AA-VV
Voltage regulator available for Output Options AA - HH and VV.
Select "A" from the TERMINATION / MATING WIRE HARNESS field from the configuration guide.
2: See page 2
3: See page 6
4: See page 7
5: If Plus limiter plate is selected, it is HIGHLY recommended to select the guided feel (option G).
6: Option qualified up tp 3 million cycles
7: Using APEM IM switch

DIMENSIONS

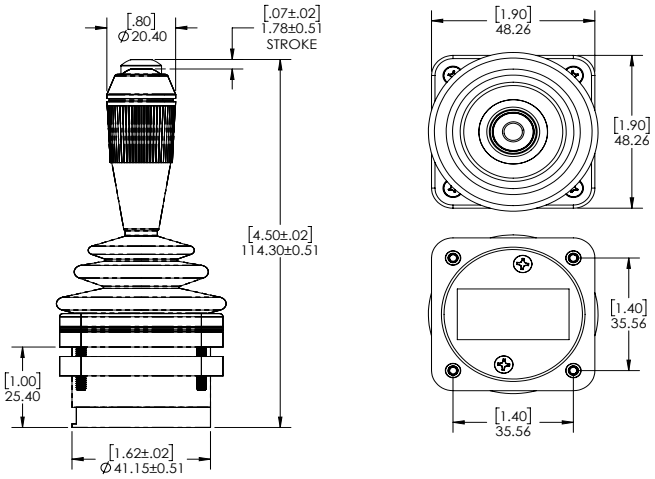

Downloaded from Arrow.com.

XF series

Multi-axis rugged fingertip controllers • non-contacting Hall effect technology

BUILD YOUR PART NUMBER

XF			N						N			A		

SERIES

HANDLE

28	2 axis, pushbutton actuator[7]

BUTTONS

B	NO & NC contact

HANDLE ROTATION

N	Locked Z axis

LIMITER PLATE

D	Diamond	◇
T	Square	□
R	Round	○
Y	Slotted	ǀ
X	Slotted	—
P	Plus [5]	+

CENTERING

S	Spring Centering

OPERATING TORQUE

A	.04 Nm
B	.05 Nm
C	.06Nm[6]
D	.07 Nm[6]

MECHANICAL FEATURES

N	None
G	Guided feel

OUTPUT

AA	0V-5V
BB	0.25V-4.75V
CC	0.5V-4.5V
DD	1V-4V
EE	(0V-5V)(5V-0V)
FF	(0.25V - 4.75V) (4.75V - 0.25V)
GG	(0.5V - 4.5V) (4.5V - 0.5V)
HH	(1V - 4V) (4V - 1V)
VV	±10V
NN	CAN bus J1939-71
PP	CANopen
QQ	CANopen LSS
UU	USB joystick, Game Controller
TT	USB mouse, Cursor Control

SEALING

E	IP67 as standard

TERMINATION/ MATING WIRE HARNESS

A	None: No mating wire harness provided
B	Outputs AA - HH - Mating wire harness to flying leads for analog outputs. No connector [2]
C	Output NN - QQ - Mating wire harness to flying leads for CAN bus outputs. No connector [3]
D	Output NN - QQ - Mating wire harness with Deutsch DTM04-6P connector for CAN bus outputs.
E	Output UU - TT – Overmolded USB cable – Male A to Mini B / 6' [4]

SPECIAL OPTIONS

V	Voltage Regulator [1]

1: Available for output options AA-VV
Voltage regulator available for Output Options AA - HH and VV.
Select «A» from the TERMINATION / MATING WIRE HARNESS field from the configuration guide.
2: See page 2
3: See page 6
4: See page 7
5: If Plus limiter plate is selected, it is HIGHLY recommended to select the guided feel (option G).
6: Option qualified up to 3 million cycles
7: Push down actuator using APEM IG switch and qualified for 1 million cycles

DIMENSIONS

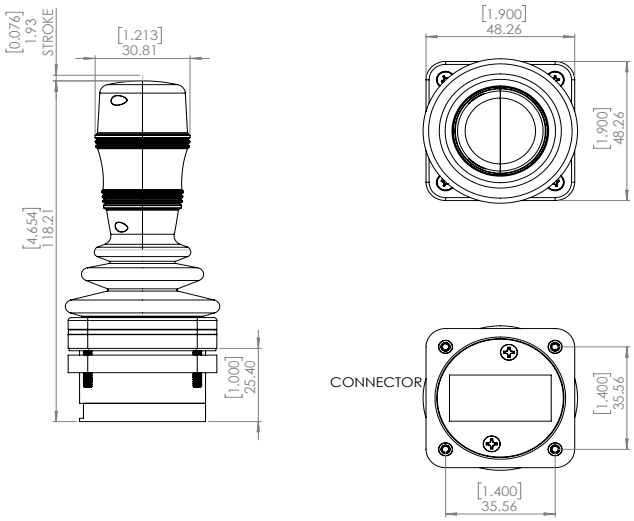

Downloaded from Arrow.com.

XF series

Multi-axis rugged fingertip controllers • non-contacting Hall effect technology

BUILD YOUR PART NUMBER

XF		A	N						N			A		

SERIES

HANDLE

50	Three axis No button

HANDLE ROTATION

N	Locked Z axis
Z	Third axis Z active

CENTERING

S	Spring Centering

MECHANICAL FEATURES

N	None
G	Guided feel

SEALING

E	IP67 as standard

SPECIAL OPTIONS

V	Voltage Regulator [1]

LIMITER PLATE

D	Diamond ◇
T	Square □
R	Round ○
Y	Slotted ‖
X	Slotted —
P	Plus [5] ✚

OPERATING TORQUE

A	.04 Nm
B	.05 Nm
C	.06 Nm
D	.07 Nm

OUTPUT

AA	0V-5V
BB	0.25V-4.75V
CC	0.5V-4.5V
DD	1V-4V
EE	(0V-5V)(5V-0V)
FF	(0.25V - 4.75V) (4.75V - 0.25V)
GG	(0.5V - 4.5V) (4.5V - 0.5V)
HH	(1V - 4V) (4V - 1V)
VV	±10V
NN	CAN bus J1939-71
PP	CANopen
QQ	CANopen LSS
UU	USB joystick, Game Controller
TT	USB mouse, Cursor Control

TERMINATION/ MATING WIRE HARNESS

A	None: No mating wire harness provided
B	Outputs AA - HH - Mating wire harness to flying leads for analog outputs. No connector [2]
C	Output NN - QQ - Mating wire harness to flying leads for CAN bus outputs. No connector [3]
D	Output NN - QQ - Mating wire harness with Deutsch DTM04-6P connector for CAN bus outputs.
E	Output UU - TT – Overmolded USB cable – Male A to Mini B / 6' [4]

1: Available for output options AA-VV
Voltage regulator available for Output Options AA - HH and VV.
Select «A» from the TERMINATION / MATING WIRE HARNESS field from the configuration guide.
2: See page 2
3: See page 6
4: See page 7
5: If Plus limiter plate is selected, it is HIGHLY recommended to select the guided feel (option G).

DIMENSIONS

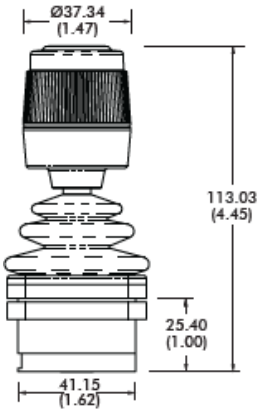

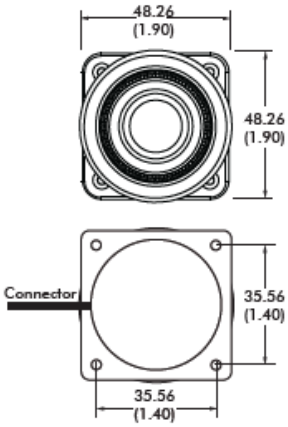

Downloaded from Arrow.com.

XF series

Multi-axis rugged fingertip controllers • non-contacting Hall effect technology

BUILD YOUR PART NUMBER

XF		A	N						N			A		

SERIES

HANDLE

51	Three axis One button

HANDLE ROTATION

N	Locked Z axis
Z	Third axis Z active

CENTERING

S	Spring Centering

MECHANICAL FEATURES

N	None
G	Guided feel

SEALING

E	IP67 as standard

SPECIAL OPTIONS

V	Voltage Regulator [1]

LIMITER PLATE

D	Diamond	◇
T	Square	□
R	Round	○
Y	Slotted	‖
X	Slotted	—
P	Plus [5]	✚

OPERATING TORQUE

A	.04 Nm
B	.05 Nm
C	.06 Nm
D	.07 Nm

OUTPUT

AA	0V-5V
BB	0.25V-4.75V
CC	0.5V-4.5V
DD	1V-4V
EE	(0V-5V)(5V-0V)
FF	(0.25V - 4.75V) (4.75V - 0.25V)
GG	(0.5V - 4.5V) (4.5V - 0.5V)
HH	(1V - 4V) (4V - 1V)
VV	±10V
NN	CAN bus J1939-71
PP	CANopen
QQ	CANopen LSS
UU	USB joystick, Game Controller
TT	USB mouse, Cursor Control

TERMINATION/ MATING WIRE HARNESS

A	None: No mating wire harness provided
B	Outputs AA - HH - Mating wire harness to flying leads for analog outputs. No connector [2]
C	Output NN - QQ - Mating wire harness to flying leads for CAN bus outputs. No connector [3]
D	Output NN - QQ - Mating wire harness with Deutsch DTM04-6P connector for CAN bus outputs.
E	Output UU - TT – Overmolded USB cable – Male A to Mini B / 6' [4]

1: Available for output options AA-VV
Voltage regulator available for Output Options AA - HH and VV.
Select «A» from the TERMINATION / MATING WIRE HARNESS field from the configuration guide.
2: See page 2
3: See page 6
4: See page 7
5: If Plus limiter plate is selected, it is HIGHLY recommended to select the guided feel (option G).

DIMENSIONS

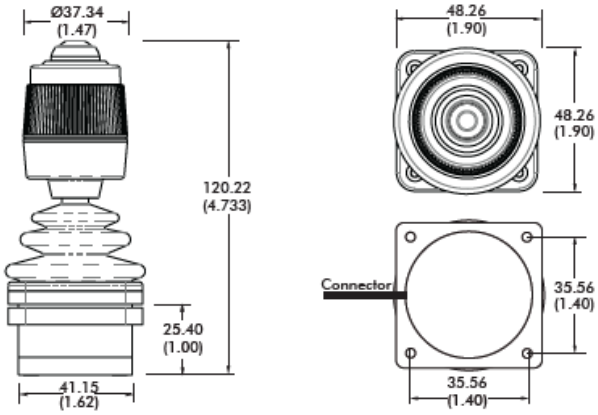

Downloaded from Arrow.com.

XF series

Multi-axis rugged fingertip controllers • non-contacting Hall effect technology

BUILD YOUR PART NUMBER

XF		A	N						N			A		

SERIES

HANDLE

52	Three axis Two buttons

HANDLE ROTATION

N	Locked Z axis
Z	Third axis Z active

CENTERING

S	Spring Centering

MECHANICAL FEATURES

N	None
G	Guided feel

SEALING

E	IP67 as standard

SPECIAL OPTIONS

V	Voltage Regulator [1]

LIMITER PLATE

D	Diamond	◇
T	Square	□
R	Round	○
Y	Slotted	▮
X	Slotted	▬
P	Plus [5]	╬

OPERATING TORQUE

A	.04 Nm
B	.05 Nm
C	.06 Nm
D	.07 Nm

OUTPUT

AA	0V-5V
BB	0.25V-4.75V
CC	0.5V-4.5V
DD	1V-4V
EE	(0V-5V)(5V-0V)
FF	(0.25V - 4.75V) (4.75V - 0.25V)
GG	(0.5V - 4.5V) (4.5V - 0.5V)
HH	(1V - 4V) (4V - 1V)
VV	±10V
NN	CAN bus J1939-71
PP	CANopen
QQ	CANopen LSS
UU	USB joystick, Game Controller
TT	USB mouse, Cursor Control

TERMINATION/ MATING WIRE HARNESS

A	None: No mating wire harness provided
B	Outputs AA - HH - Mating wire harness to flying leads for analog outputs. No connector [2]
C	Output NN - QQ - Mating wire harness to flying leads for CAN bus outputs. No connector [3]
D	Output NN - QQ - Mating wire harness with Deutsch DTM04-6P connector for CAN bus outputs.
E	Output UU - TT – Overmolded USB cable – Male A to Mini B / 6' [4]

1: Available for output options AA-VV
Voltage regulator available for Output Options AA - HH and VV.
Select «A» from the TERMINATION / MATING WIRE HARNESS field from the configuration guide.
2: See page 2
3: See page 6
4: See page 7
5: If Plus limiter plate is selected, it is HIGHLY recommended to select the guided feel (option G).

DIMENSIONS

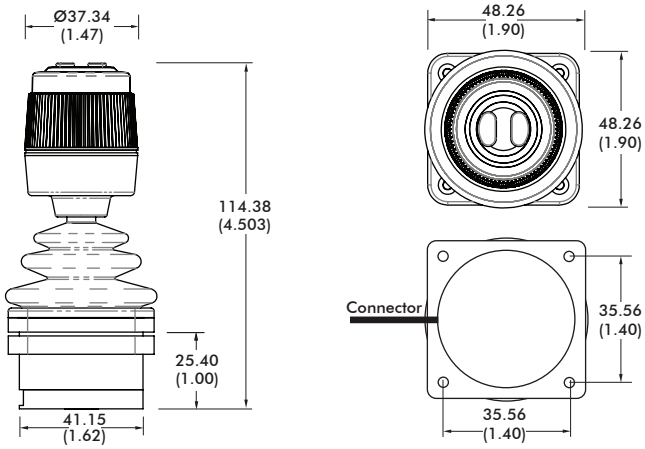

Downloaded from Arrow.com.

XF series

Multi-axis rugged fingertip controllers • non-contacting Hall effect technology

BUILD YOUR PART NUMBER

XF			B							N			A		

SERIES

HANDLE

55	Three axis

HANDLE COATING

N	None
S	Soft Touch

BUTTONS

2	Two
N	No buttons

HANDLE ROTATION

N	Locked Z axis
Z	Third axis Z active

LIMITER PLATE

D	Diamond	◇
T	Square	□
R	Round	○
Y	Slotted	‖
X	Slotted	═
P	Plus [5]	╪

CENTERING

S	Spring Centering

OPERATING TORQUE

A	.04 Nm
B	.05 Nm
C	.06 Nm
D	.07 Nm

MECHANICAL FEATURES

N	None
G	Guided feel

OUTPUT

AA	0V-5V
BB	0.25V-4.75V
CC	0.5V-4.5V
DD	1V-4V
EE	(0V-5V)(5V-0V)
FF	(0.25V - 4.75V) (4.75V - 0.25V)
GG	(0.5V - 4.5V) (4.5V - 0.5V)
HH	(1V - 4V) (4V - 1V)
VV	±10V
NN	CAN bus J1939-71
PP	CANopen
QQ	CANopen LSS
UU	USB joystick, Game Controller
TT	USB mouse, Cursor Control

SEALING

E	IP67 as standard

SPECIAL OPTIONS

V	Voltage Regulator [1]

TERMINATION/ MATING WIRE HARNESS

A	None: No mating wire harness provided
B	Outputs AA - HH - Mating wire harness to flying leads for analog outputs. No connector [2]
C	Output NN - QQ - Mating wire harness to flying leads for CAN bus outputs. No connector [3]
D	Output NN - QQ - Mating wire harness with Deutsch DTM04-6P connector for CAN bus outputs.
E	Output UU - TT – Overmolded USB cable – Male A to Mini B / 6' [4]

1: Available for output options AA-VV
Voltage regulator available for Output Options AA - HH and VV.
Select «A» from the TERMINATION / MATING WIRE HARNESS field from the configuration guide.
2: See page 2
3: See page 6
4: See page 7
5: If Plus limiter plate is selected, it is HIGHLY recommended to select the guided feel (option G).

DIMENSIONS

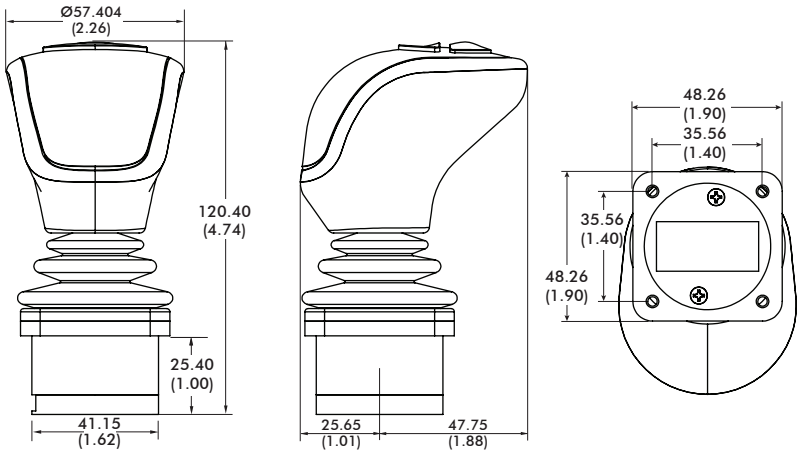

Downloaded from Arrow.com.

XF series

Multi-axis rugged fingertip controllers • non-contacting Hall effect technology

VOLTAGE REGULATOR

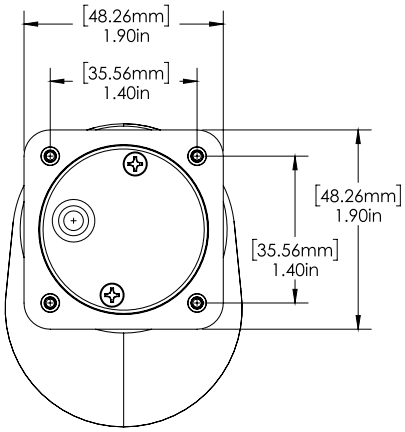

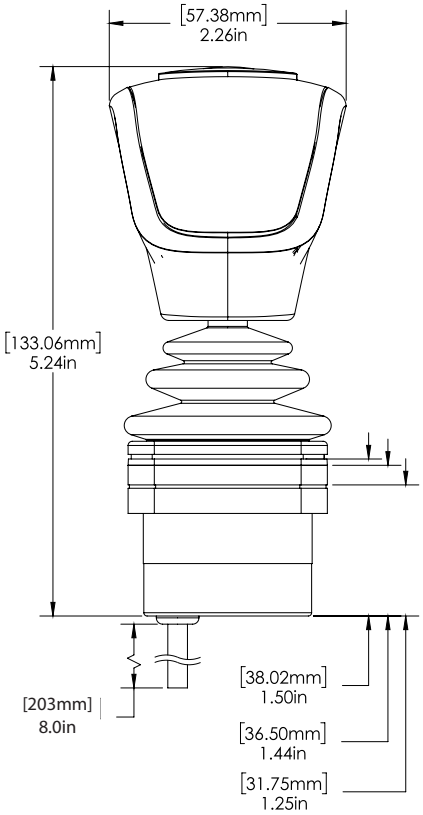

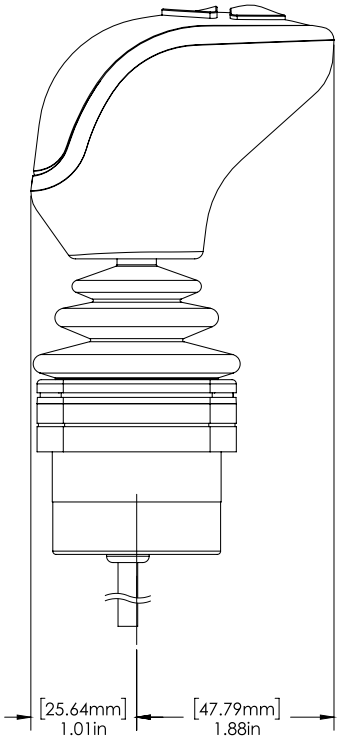

Downloaded from Arrow.com.

XF series

Multi-axis rugged fingertip controllers • non-contacting Hall effect technology

CAN BUS OUTPUT

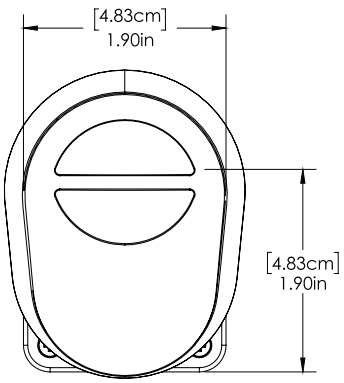

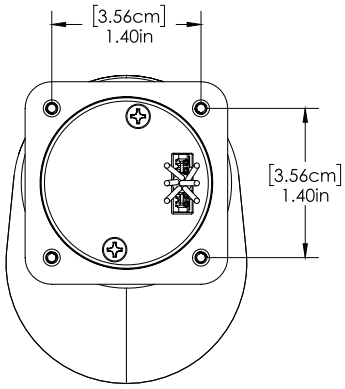

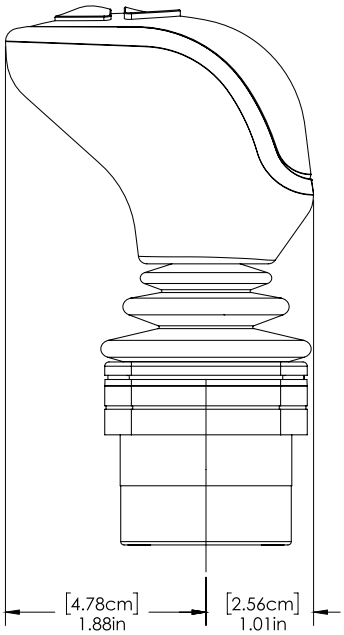

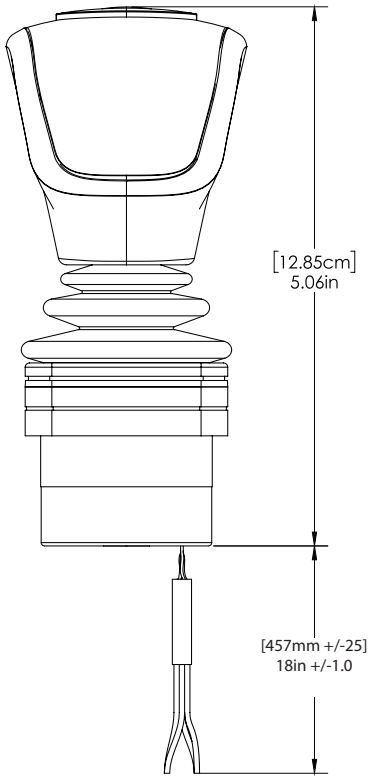

Downloaded from Arrow.com.

XF series

Multi-axis rugged fingertip controllers •
non-contacting Hall effect technology

ANALOG

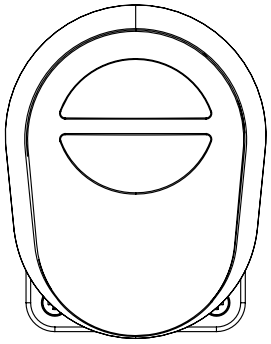

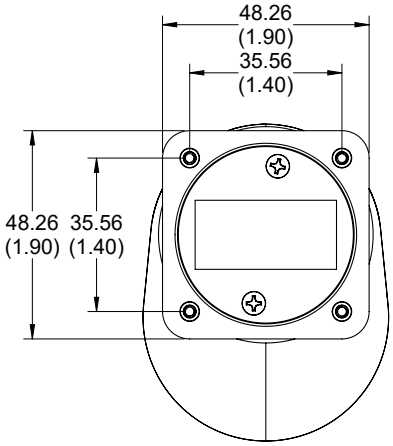

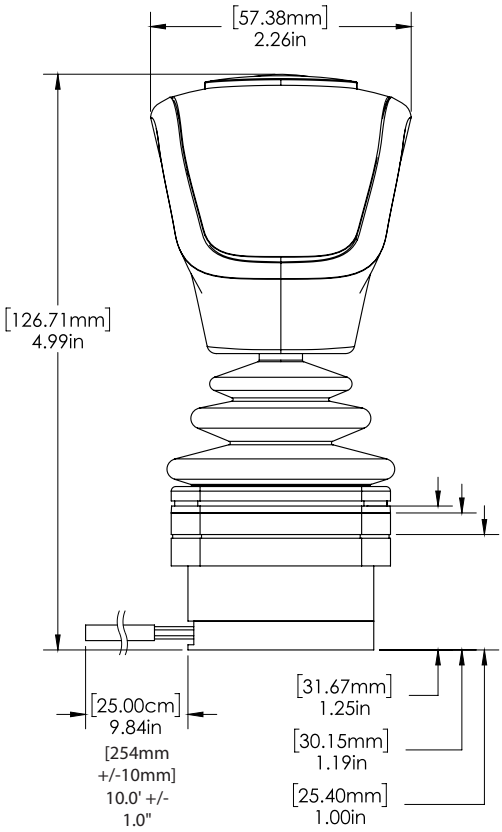

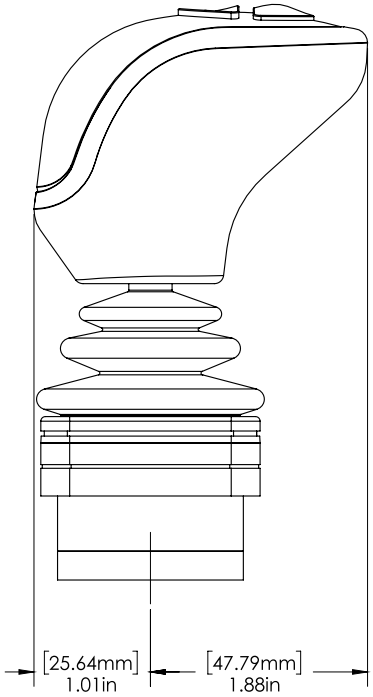

Downloaded from Arrow.com.