view shown without plastic pin and grounding

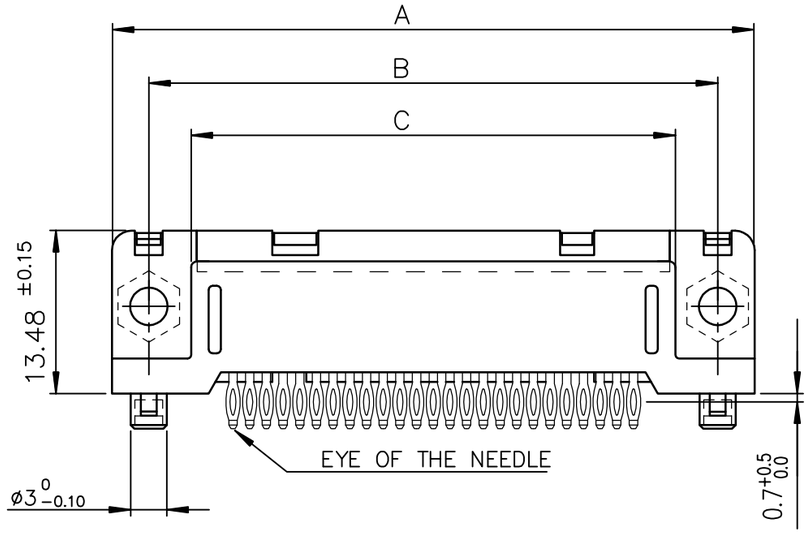

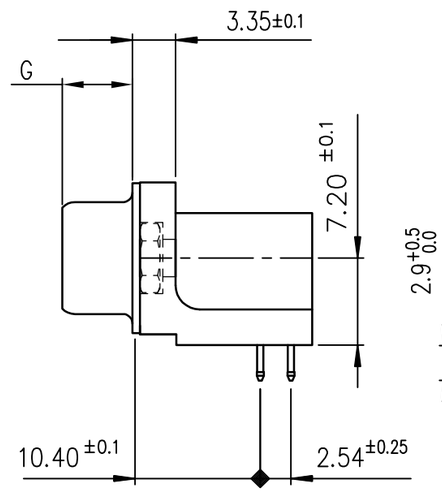

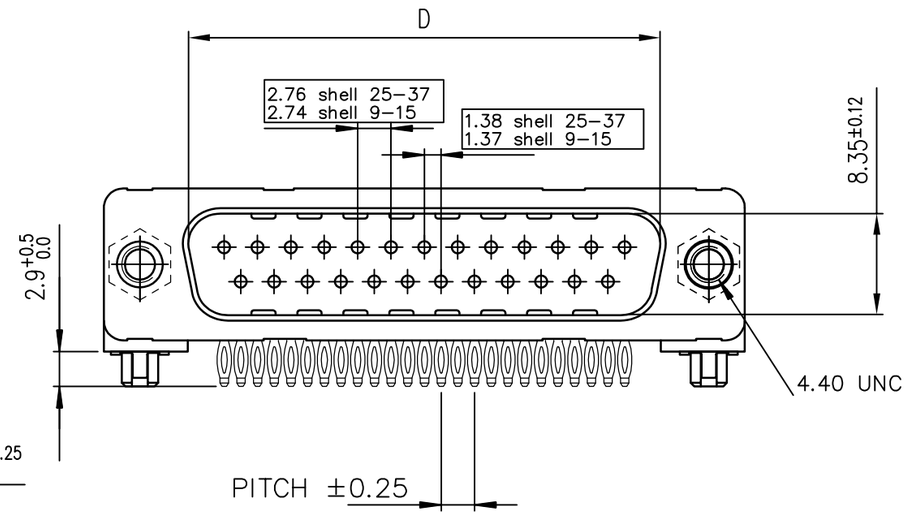

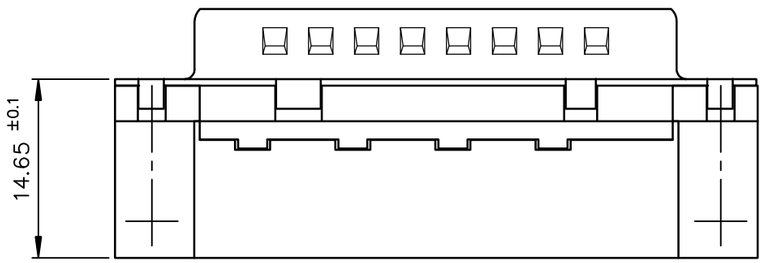

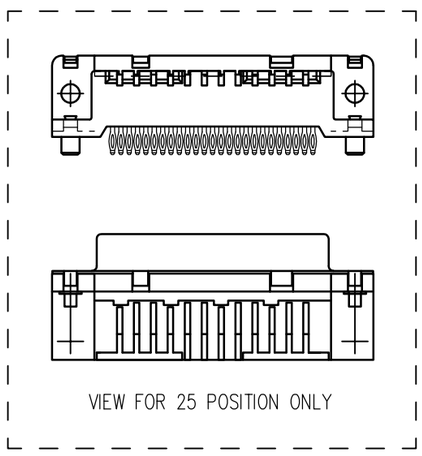

PC card drilling dimensions(after plating)
(thickness 1.60 ±0.20)

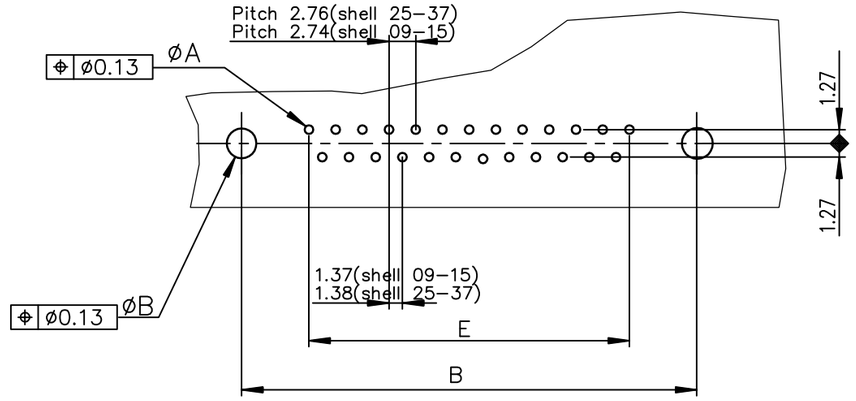

SHELL	A±0.38	B±0.12	C±0.10	D +0.25 0	E±0.07	G	LEAD FREE PART NUMBER	LEAD FREE PART NUMBER
09	30.81	24.99	18.00	16.79	10.96	5.90 +0.15 0	D09P81C4GX00LF	D09P81C6GX00LF
15	39.14	33.32	26.32	25.12	19.18	5.90 +0.15 0	D15P81C4GX00LF	D15P81C6GX00LF
25	53.03	47.04	40.04	38.84	33.12	5.70 +0.25 0	D25P81C4GX00LF	D25P81C6GX00LF
37	69.32	63.50	56.50	55.30	49.68	5.70 +0.25 0	D37P81C4GX00LF	D37P81C6GX00LF
							Gold flash	0.76 µ gold/GxT

GENERAL CHARACTERISTICS AND ROHS INFORMATIONS:

SEE DRAWING C01−8646−0001

ltr	ecn no	dr	date
J	ELX-I-18050	MP	2014/06/23
K	ELX-I-35350	GM	2019/11/08

mat'l. code: −

surface: ISO 1302

tolerance: ISO 406 ISO 1101

tolerances unless otherwise specified: angles 0°±2°; linear .0±.0.1; .00±0.1; .000±0.1

projection

MM

scale 2:1

dr	PESSON	1996/11/06
engr	GREGAR M	2014/06/23
chr	SREERAJ K R	2019/11/08
appd	SANOJ P K	2019/11/08

product family: D−SUB

title: MALE CONNECTOR DELTA-D EUROPE RIGHT ANGLED PRESS FIT

dwg no: C01−8646−0513 sheet 1 of 1 size A3

type: Product Customer Drawing

sheet index: revision K; sheet 1

© 2016 AFCI

form: A3-2016-02-24

Downloaded from Arrow.com.