molex
one company › a world of innovation

This document was generated on 02/19/2021

PLEASE CHECK WWW.MOLEX.COM FOR LATEST PART INFORMATION

Part Number: 0354301900

Status: Active

Description: 6.00mm Tab Wire-to-Wire Terminal, Female, Two-Piece Type, Wire Range AVS

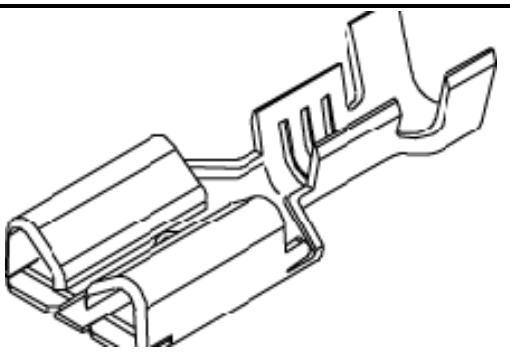

Series image - Reference only

Documents:

Drawing (PDF)
Product Specification PS-35270-001-001 (PDF)
Product Specification PS-35385-001-001 (PDF)
Packaging Specification PK-35430-001-001 (PDF)
RoHS Certificate of Compliance (PDF)

General

Product Family	Crimp Terminals
Series	35430
Application	Power, Wire-to-Wire
Crimp Quality Equipment	Yes
Product Name	N/A
UPC	756054160459

Physical

Gender	Female
Material - Metal	Copper-Nickel-Tin, High Copper Alloy
Material - Plating Mating	Tin
Material - Plating Termination	Tin
Net Weight	1.120/g
Packaging Type	Reel
Plating min - Mating	0.813µm
Plating min - Termination	0.813µm
Termination Interface: Style	Crimp or Compression
Wire Insulation Diameter	3.10-4.20mm
Wire Size AWG	12, 14
Wire Size mm²	N/A

Electrical

Current - Maximum per Contact	30.0A

Solder Process Data

Lead-freeProcess Capability	N/A

Material Info

Reference - Drawing Numbers

Crimp Specification	CS-35430-001-001
Packaging Specification	PK-35430-001-001
Product Specification	PS-35270-001-001, PS-35385-001-001
Sales Drawing	SD-35430-001-001

EU ELV
Compliant

EU RoHS
Compliant

China RoHS

REACH SVHC
Not Contained Per - D(2020)9139-DC (19 Jan 2021)

Halogen-Free Status
Low-Halogen

For more information, please visit Contact US

China ROHS	Not Relevant
ELV	Compliant
RoHS Phthalates	Not Contained

Search Parts in this Series
35430 Series

Mates With
35725 Terminal

Use With
35270 Housing

This document was generated on 02/19/2021

PLEASE CHECK WWW.MOLEX.COM FOR LATEST PART INFORMATION

Downloaded from Arrow.com.