MICRO SWITCH
FREEPORT ILLINOIS, U.S.A
A DIVISION OF HONEYWELL
FED. MFG. CODE 91929

SWITCH – BASIC

CATALOG LISTING
BA-2RV191-A2

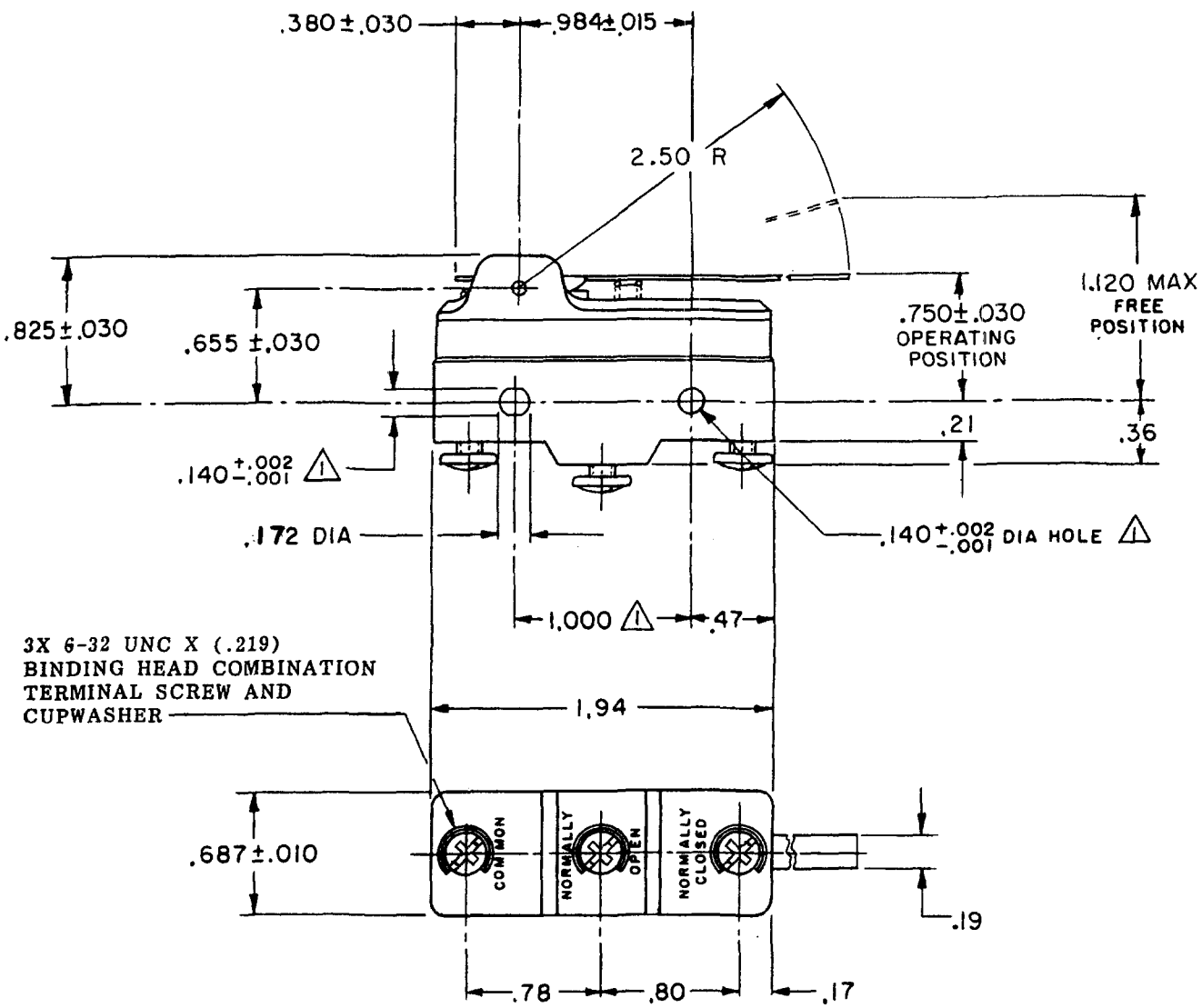

NOTE-
1 – MOUNTING HOLES WILL ACCEPT PINS OR SCREWS OF .139 MAX DIA ON 1.000±.002 CENTERS

THIS DRAWING COVERS A PROPRIETARY ITEM AND IS THE PROPERTY OF MICRO SWITCH. A DIVISION OF HONEYWELL. THIS DRAWING IS NOT TO BE COPIED OR USED WITHOUT THE APPROVAL OF MICRO SWITCH.

THIRD ANGLE PROJECTION

CHARACTERISTICS

OPERATING FORCE – – – – 10 OZ MAX
RELEASE FORCE – – – – 3 1/4 OZ MIN
PRETRAVEL – – – – – – – – .400 MAX
DIFFERENTIAL TRAVEL – – – – .070 MAX
OVERTRAVEL – – – – – – – – .050 MIN

ELECTRICAL DATA

CONTACT ARRANGEMENT
S P D T

UL LISTED – FILE E12252
20A–125, 250 OR 480 VAC; 10A–125 VAC "L"
1HP–125 VAC; 2HP–250 VAC
CODE L23 1/2A-125 VDC; 1/4A-250 VDC

L288
L299
L308
20(3)A 250V ~ T85 5E4

SCALE FULL
DO NOT SCALE PRINT

TOLERANCES
APPLY TO DESIGN UNITS. CONVERSIONS ARE ONLY FOR REFERENCE. UNLESS NOTED, TOLERANCES ARE ±

	DIM. mm	TOL. mm/in	DIM. in	TOL. mm/in
NO PLACES	X	1/.04		
ONE PLACE	X.X	0.4/.016	X.X	0.8/.03
TWO PLACES	X.XX	0.15/.006	X.XX	0.38/.015
THREE PLACES			X.XXX	0.13/.005
ANGLES				

DESIGN UNITS SI METRIC ☐ US CUSTOMARY ☒

WEIGHT .065 LB

BA-2RV191-A2
PAGE 1 OF 1
M
DRAWING NUMBER
ISSUE 7
RELEASE NO. PR-6208
REPLACES

REVISIONS
A CO 38387 K S W 5 MAR 77
B CO 45511 T M M 19 FEB 79
C CO-73287-J J A L 22 NOV 93
D CO 77590 SAD 9 JUN94
E CO-82886 JALA 23 APR 96
F C093346 DLT 26 AUG 98

CHECK CEB 30 NOV 76
CHECK 76
CHECK
R E R 24 NOV 76
DRAWN
FORMTEK
FO-52848-A

Downloaded from Arrow.com.