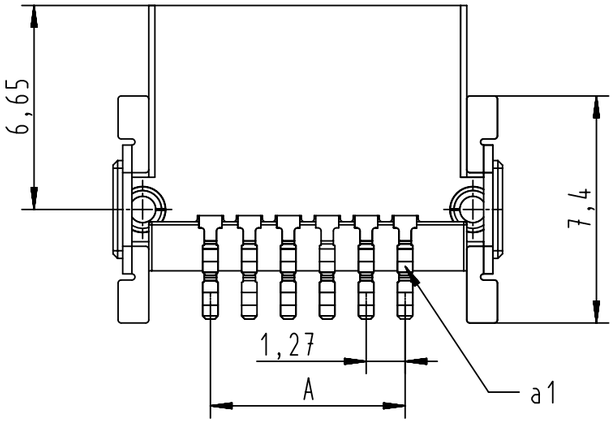

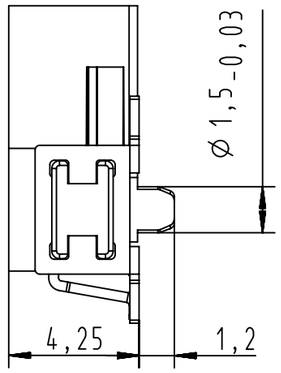

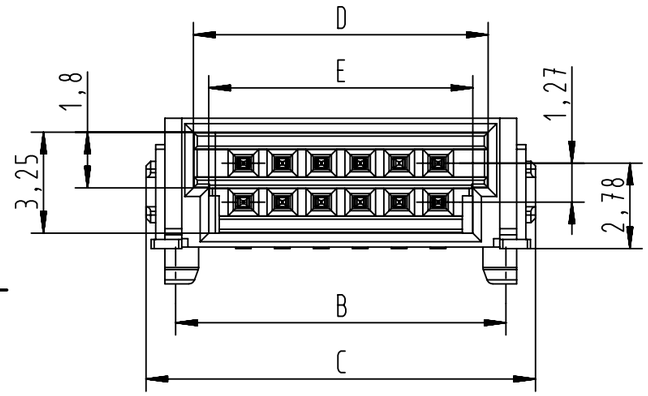

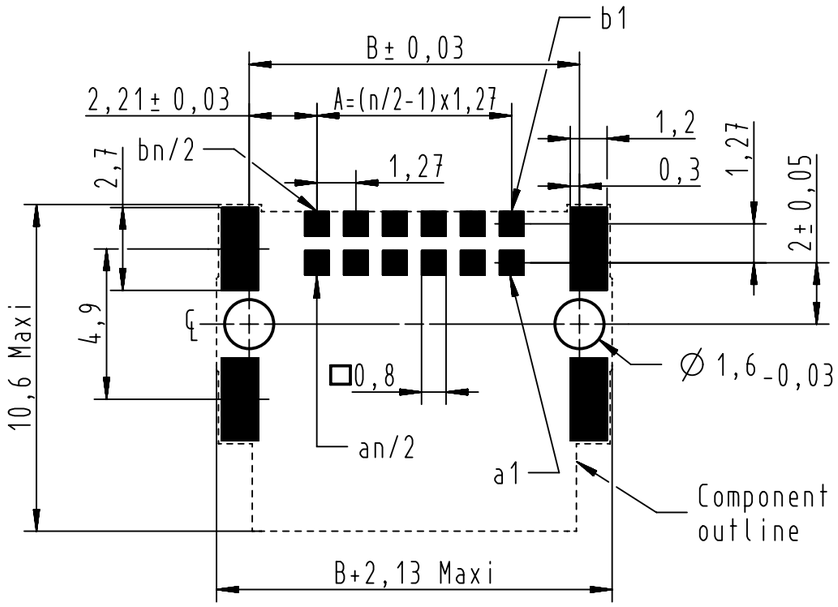

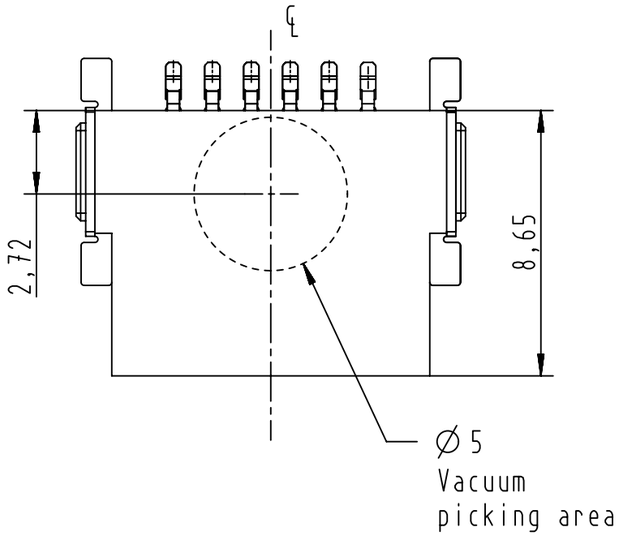

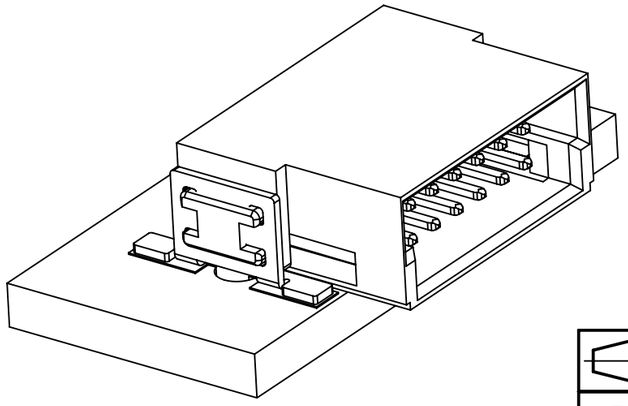

Part number	nb of cont.	A	B	C	D	E
15 15 006 x601xxx	006	2.54	6.96	8.89	5.76	4.76
15 15 008 x601xxx	008	3.81	8.23	10.16	7.03	6.03
15 15 010 x601xxx	010	5.08	9.50	11.43	8.30	7.30
15 15 012 x601xxx	012	6.35	10.77	12.70	9.57	8.57
15 15 014 x601xxx	014	7.62	12.04	13.97	10.84	9.84
15 15 016 x601xxx	016	8.89	13.31	15.24	12.11	11.11
15 15 018 x601xxx	018	10.16	14.58	16.51	13.38	12.38
15 15 020 x601xxx	020	11.43	15.85	17.78	14.65	13.65
15 15 022 x601xxx	022	12.70	17.12	19.05	15.92	14.92
15 15 024 x601xxx	024	13.97	18.39	20.32	17.19	16.19
15 15 026 x601xxx	026	15.24	19.66	21.59	18.46	17.46
15 15 028 x601xxx	028	16.51	20.93	22.86	19.73	18.73
15 15 030 x601xxx	030	17.78	22.20	24.13	21.00	20.00
15 15 032 x601xxx	032	19.05	23.47	25.40	22.27	21.27
15 15 034 x601xxx	034	20.32	24.74	26.67	23.54	22.54
15 15 036 x601xxx	036	21.59	26.01	27.94	24.81	23.81
15 15 038 x601xxx	038	22.86	27.28	29.21	26.08	25.08
15 15 040 x601xxx	040	24.13	28.55	30.48	27.35	26.35
15 15 042 x601xxx	042	25.40	29.82	31.75	28.62	27.62
15 15 044 x601xxx	044	26.67	31.09	33.02	29.89	28.89
15 15 046 x601xxx	046	27.94	32.36	34.29	31.16	30.16
15 15 048 x601xxx	048	29.21	33.63	35.56	32.43	31.43
15 15 050 x601xxx	050	30.48	34.90	36.83	33.70	32.70
15 15 052 x601xxx	052	31.75	36.17	38.10	34.97	33.97
15 15 054 x601xxx	054	33.02	37.44	39.37	36.24	35.24
15 15 056 x601xxx	056	34.29	38.71	40.64	37.51	36.51
15 15 058 x601xxx	058	35.56	39.98	41.91	38.78	37.78
15 15 060 x601xxx	060	36.83	41.25	43.18	40.05	39.05
15 15 062 x601xxx	062	38.10	42.52	44.45	41.32	40.32
15 15 064 x601xxx	064	39.37	43.79	45.72	42.59	41.59
15 15 066 x601xxx	066	40.64	45.06	46.99	43.86	42.86
15 15 068 x601xxx	068	41.91	46.33	48.26	45.13	44.13
15 15 070 x601xxx	070	43.18	47.60	49.53	46.40	45.40
15 15 072 x601xxx	072	44.45	48.87	50.80	47.67	46.67
15 15 074 x601xxx	074	45.72	50.14	52.07	48.94	47.94
15 15 076 x601xxx	076	46.99	51.41	53.34	50.21	49.21
15 15 078 x601xxx	078	48.26	52.68	54.61	51.48	50.48
15 15 080 x601xxx	080	49.53	53.95	55.88	52.75	51.75
15 15 082 x601xxx	082	50.80	55.22	57.15	54.02	53.02
15 15 084 x601xxx	084	52.07	56.49	58.42	55.29	54.29
15 15 086 x601xxx	086	53.34	57.76	59.69	56.56	55.56
15 15 088 x601xxx	088	54.61	59.03	60.96	57.83	56.83
15 15 090 x601xxx	090	55.88	60.30	62.23	59.10	58.10
15 15 092 x601xxx	092	57.15	61.57	63.50	60.37	59.37
15 15 094 x601xxx	094	58.42	62.84	64.77	61.64	60.64
15 15 096 x601xxx	096	59.69	64.11	66.04	62.91	61.91
15 15 098 x601xxx	098	60.96	65.38	67.31	64.18	63.18
15 15 100 x601xxx	100	62.23	66.65	68.58	65.45	64.45

Performance Level	
PL1 : >500 mating cycles	2
PL2 : >250 mating cycles	6
PLS4 : min 0.06µm Au over 0.7+0.2µm PdNi	5

Packaging	
tape & reel with 560pcs per reel	000
samples	333

All Dimensions in mm
Original Size DIN A3

Scale 5:1

Free size tol.

Ref.
Sub.

All rights reserved

Department EC PD - FR

HARTING Electronics GmbH
D-32339 Espelkamp

Created by	Inspected by	Standardisation	Date	State
ATIRIS	DAUCHELLE	HOFFMANN	2013-10-18	Final Release

Title: har-flex angled male connector

Doc-Key / ECM-Nr.: 100223537/UGD/008/C 500000060939

Type: TB

Number: 1515XXXX601_XXX

Rev.: C

Page: 1/1

A3

Downloaded from Arrow.com.