XLamp® XP-L LEDs

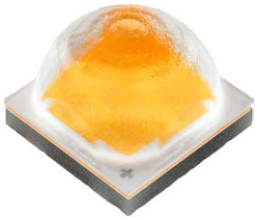

XP-L High Density LED

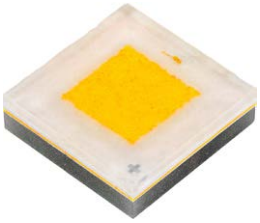

XP-L High Intensity LED

PRODUCT DESCRIPTION

XLamp® XP-L LEDs are available in two versions: High Density (HD) and High Intensity (HI).

The XLamp XP-L HD LED is the highest performing discrete in Cree LED's HD class of LEDs, delivering the next generation of lumen output and efficacy in the compact 3.45 mm x 3.45 mm XP footprint. Cree LED's HD LEDs, optimized to deliver maximum lumen output in a small form factor, enable lighting manufacturers to improve the performance of any lighting design, create smaller and less expensive systems, and develop new lighting solutions that were previously not possible.

The XLamp XP-L HI LED is the first of Cree LED's new class of high-intensity LEDs optimized to deliver maximum candela through secondary optics. The XP-L HI LED delivers 120 percent more candela than the XP-L HD LED through the same optic. The XP-L HI LED leverages the industry's highest single-die performance and a new innovative primary optic design that radically reduces the optical source size to deliver both lumens and intensity.

FEATURES

- Available in white, 70-CRI white, 80-CRI white, and 90-CRI white
- ANSI-compatible chromaticity bins
- Binned at 85 °C
- Maximum drive current: 3000 mA
- Low thermal resistance: 0.5 °C/W
- Wide viewing angle: 125° (XP-L HD), 115° (XP-L HI)
- Unlimited floor life at ≤ 30 ºC/85% RH
- Reflow solderable - JEDEC J-STD-020C
- Electrically neutral thermal path
- RoHS and REACH compliant
- UL® recognized component (E349212)

TABLE OF CONTENTS

Characteristics 2
Order Codes Suggested for New Designs - XP-L High Density 3
Order Codes Suggested for New Designs - XP-L High Intensity..... 8
Relative Spectral Power Distribution 11
Relative Flux vs. Junction Temperature..... 11
Electrical Characteristics..... 12
Relative Flux vs. Current 12
Relative Chromaticity vs. Current..... 13
Relative Chromaticity vs. Temperature..... 14
Typical Spatial Distribution..... 15
Thermal Design 15
Performance Groups - Luminous Flux..... 16
Performance Groups - Chromaticity 17
Standard Cool White Kits Plotted on ANSI Standard Chromaticity Regions 20
Standard Warm and Neutral White Kits Plotted on ANSI Standard Chromaticity Regions..... 21
Standard Chromaticity Kits 23
Bin and Order Code Formats..... 24
Reflow Soldering Characteristics..... 25
Notes 26
Mechanical Dimensions 28
Tape and Reel..... 32
Packaging..... 36
Appendix - Order Codes Not For New Designs..... 37

Cree LED / 4001 E. Hwy. 54, Suite 2000 / Durham, NC 27713 USA / +1.919.313.5330 / www.cree-led.com

© 2014-2026 Cree LED. The information in this document is subject to change without notice. Cree®, the Cree logo, XLamp®, and the Cree LED logo are registered trademarks of Cree LED. UL® and the UL logo are registered trademarks of UL LLC. Other trademarks, product, and company names are the property of their respective owners and do not imply specific product and/or vendor endorsement, sponsorship or association.

Downloaded from Arrow.com.

CHARACTERISTICS

Characteristics	Unit	Minimum	Typical	Maximum
Thermal resistance, junction to solder point*	°C/W		0.5	
Viewing angle (FWHM) - XP-L High Density	degrees		125	
Viewing angle (FWHM) - XP-L High Intensity	degrees		115	
Temperature coefficient of voltage	mV/°C		-1.3	
ESD withstand voltage (HBM per Mil-Std-883D)			Class 3B	
DC forward current	mA			3000
Reverse voltage	V			1
Forward voltage (@ 1050 mA, 85 °C)	V		2.79	3.25
LED junction temperature	°C			150

* Thermal resistance measurement was performed per the JEDEC JESD51-14 standard. See the Thermal Resistance Measurement application note for more details.

© 2014-2026 Cree LED. The information in this document is subject to change without notice. Cree®, the Cree logo, XLamp®, and the Cree LED logo are registered trademarks of Cree LED. UL® and the UL logo are registered trademarks of UL LLC. Other trademarks, product, and company names are the property of their respective owners and do not imply specific product and/or vendor endorsement, sponsorship or association.

Downloaded from Arrow.com.

ORDER CODES SUGGESTED FOR NEW DESIGNS - XP-L HIGH DENSITY (T_J = 85 °C)

The following tables provide order codes for XLamp XP-L High Density LEDs. For a complete description of the order code nomenclature, please see the Bin and Order Code Formats section (page 24). For definitions of the chromaticity kits, please see the Standard Chromaticity Kits section (page 23).

Chromaticity		Minimum Luminous Flux (lm) @ 1050 mA			Order Codes	
Kit	CCT	Code	Flux (lm) @ 85 °C	Flux (lm) @ 25 °C*	65 CRI Typical	70 CRI Minimum
51	6200 K	W2	500	549	XPLAWT-00-0000-0000W2051	XPLAWT-00-0000-000BW2051
		V6	480	535	XPLAWT-00-0000-0000V6051	XPLAWT-00-0000-000BV6051
		V5	460	513	XPLAWT-00-0000-0000V5051	XPLAWT-00-0000-000BV5051
53	6000 K	W2	500	549	XPLAWT-00-0000-0000W2053	XPLAWT-00-0000-000BW2053
		V6	480	535	XPLAWT-00-0000-0000V6053	XPLAWT-00-0000-000BV6053
		V5	460	513	XPLAWT-00-0000-0000V5053	XPLAWT-00-0000-000BV5053
50	6200 K	W2	500	549	XPLAWT-00-0000-0000W2050	XPLAWT-00-0000-000BW2050
		V6	480	535	XPLAWT-00-0000-0000V6050	XPLAWT-00-0000-000BV6050
		V5	460	513	XPLAWT-00-0000-0000V5050	XPLAWT-00-0000-000BV5050
E1	6500 K	W2	500	549	XPLAWT-00-0000-0000W20E1	XPLAWT-00-0000-000BW20E1
		V6	480	535	XPLAWT-00-0000-0000V60E1	XPLAWT-00-0000-000BV60E1
		V5	460	513	XPLAWT-00-0000-0000V50E1	XPLAWT-00-0000-000BV50E1
E2	5700 K	W2	500	549	XPLAWT-00-0000-0000W20E2	XPLAWT-00-0000-000BW20E2
		V6	480	535	XPLAWT-00-0000-0000V60E2	XPLAWT-00-0000-000BV60E2
		V5	460	513	XPLAWT-00-0000-0000V50E2	XPLAWT-00-0000-000BV50E2

Notes

- Cree LED maintains a tolerance of ±7% on flux and power measurements, ±0.005 on chromaticity (CCx, CCy) measurements and a tolerance of ±2 on CRI measurements. See the Measurements section (page 26).
- XLamp XP-L LED order codes specify only a minimum flux bin and not a maximum. Cree LED may ship reels in flux bins higher than the minimum specified by the order code without advance notice. Shipments will always adhere to the chromaticity bin restrictions specified by the order code.

* Flux values @ 25 °C are calculated and for reference only.

© 2014-2026 Cree LED. The information in this document is subject to change without notice. Cree®, the Cree logo, XLamp®, and the Cree LED logo are registered trademarks of Cree LED. UL® and the UL logo are registered trademarks of UL LLC. Other trademarks, product, and company names are the property of their respective owners and do not imply specific product and/or vendor endorsement, sponsorship or association.

Downloaded from Arrow.com.

ORDER CODES SUGGESTED FOR NEW DESIGNS - XP-L HIGH DENSITY (T_J = 85 °C) - CONTINUED

Chromaticity		Minimum Luminous Flux (lm) @ 1050 mA			Order Codes		
Kit	CCT	Code	Flux (lm) @ 85 °C	Flux (lm) @ 25 °C*	70 CRI Minimum	75 CRI Typical	80 CRI Minimum
E3	5000 K	W2	500	549	XPLAWT-00-0000-000BW20E3		
		V6	480	535	XPLAWT-00-0000-000BV60E3		
		V5	460	513	XPLAWT-00-0000-000BV50E3	XPLAWT-00-0000-000LV50E3	
		V4	440	491		XPLAWT-00-0000-000LV40E3	
		V3	420	468		XPLAWT-00-0000-000LV30E3	
		V2	400	446		XPLAWT-00-0000-000LV20E3	
F4	4750 K	W2	500	549	XPLAWT-00-0000-000BW20F4		
		V6	480	535	XPLAWT-00-0000-000BV60F4		
		V5	460	513	XPLAWT-00-0000-000BV50F4	XPLAWT-00-0000-000LV50F4	
		V4	440	491		XPLAWT-00-0000-000LV40F4	
		V3	420	468		XPLAWT-00-0000-000LV30F4	
		V2	400	446		XPLAWT-00-0000-000LV20F4	
E4	4500 K	W2	500	549	XPLAWT-00-0000-000BW20E4		
		V6	480	535	XPLAWT-00-0000-000BV60E4		
		V5	460	513	XPLAWT-00-0000-000BV50E4	XPLAWT-00-0000-000LV50E4	
		V4	440	491		XPLAWT-00-0000-000LV40E4	
		V3	420	468		XPLAWT-00-0000-000LV30E4	
		V2	400	446		XPLAWT-00-0000-000LV20E4	
F5	4250 K	W2	500	549	XPLAWT-00-0000-000BW20F5		
		V6	480	535	XPLAWT-00-0000-000BV60F5		
		V5	460	513	XPLAWT-00-0000-000BV50F5	XPLAWT-00-0000-000LV50F5	
		V4	440	491		XPLAWT-00-0000-000LV40F5	
		V3	420	468		XPLAWT-00-0000-000LV30F5	
		V2	400	446		XPLAWT-00-0000-000LV20F5	
E5	4000 K	W2	500	549	XPLAWT-00-0000-000BW20E5		
		V6	480	535	XPLAWT-00-0000-000BV60E5		
		V5	460	513	XPLAWT-00-0000-000BV50E5	XPLAWT-00-0000-000LV50E5	XPLAWT-00-0000-000HV50E5
		V4	440	491		XPLAWT-00-0000-000LV40E5	XPLAWT-00-0000-000HV40E5
		V3	420	468		XPLAWT-00-0000-000LV30E5	XPLAWT-00-0000-000HV30E5
		V2	400	446		XPLAWT-00-0000-000LV20E5	

Notes

- Cree LED maintains a tolerance of ±7% on flux and power measurements, ±0.005 on chromaticity (CCx, CCy) measurements and a tolerance of ±2 on CRI measurements. See the Measurements section (page 26).
- XLamp XP-L LED order codes specify only a minimum flux bin and not a maximum. Cree LED may ship reels in flux bins higher than the minimum specified by the order code without advance notice. Shipments will always adhere to the chromaticity bin restrictions specified by the order code.

* Flux values @ 25 °C are calculated and for reference only.

© 2014-2026 Cree LED. The information in this document is subject to change without notice. Cree®, the Cree logo, XLamp®, and the Cree LED logo are registered trademarks of Cree LED. UL® and the UL logo are registered trademarks of UL LLC. Other trademarks, product, and company names are the property of their respective owners and do not imply specific product and/or vendor endorsement, sponsorship or association.

Downloaded from Arrow.com.

ORDER CODES SUGGESTED FOR NEW DESIGNS - XP-L HIGH DENSITY (T_J = 85 °C) - CONTINUED

Chromaticity		Minimum Luminous Flux (lm) @ 1050 mA			Order Codes		
Kit	CCT	Code	Flux (lm) @ 85 °C	Flux (lm) @ 25 °C*	70 CRI Minimum	75 CRI Typical	80 CRI Minimum
Z5	4000 K	V6	480	535	XPLAWT-00-0000-000BV60Z5		
		V5	460	513	XPLAWT-00-0000-000BV50Z5	XPLAWT-00-0000-000LV50Z5	XPLAWT-00-0000-000HV50Z5
		V4	440	491	XPLAWT-00-0000-000BV40Z5	XPLAWT-00-0000-000LV40Z5	XPLAWT-00-0000-000HV40Z5
		V3	420	468		XPLAWT-00-0000-000LV30Z5	XPLAWT-00-0000-000HV30Z5
		V2	400	446		XPLAWT-00-0000-000LV20Z5	
F6	3700 K	V4	440	491		XPLAWT-00-0000-000LV40F6	XPLAWT-00-0000-000HV40F6
		V3	420	468		XPLAWT-00-0000-000LV30F6	XPLAWT-00-0000-000HV30F6
		V2	400	446		XPLAWT-00-0000-000LV20F6	

Notes

- Cree LED maintains a tolerance of ±7% on flux and power measurements, ±0.005 on chromaticity (CCx, CCy) measurements and a tolerance of ±2 on CRI measurements. See the Measurements section (page 26).
- XLamp XP-L LED order codes specify only a minimum flux bin and not a maximum. Cree LED may ship reels in flux bins higher than the minimum specified by the order code without advance notice. Shipments will always adhere to the chromaticity bin restrictions specified by the order code.

* Flux values @ 25 °C are calculated and for reference only.

© 2014-2026 Cree LED. The information in this document is subject to change without notice. Cree®, the Cree logo, XLamp®, and the Cree LED logo are registered trademarks of Cree LED. UL® and the UL logo are registered trademarks of UL LLC. Other trademarks, product, and company names are the property of their respective owners and do not imply specific product and/or vendor endorsement, sponsorship or association.

Downloaded from Arrow.com.

ORDER CODES SUGGESTED FOR NEW DESIGNS - XP-L HIGH DENSITY (T_J = 85 °C) - CONTINUED

Chromaticity		Minimum Luminous Flux (lm) @ 1050 mA			Order Codes		
Kit	CCT	Code	Flux (lm) @ 85 °C	Flux (lm) @ 25 °C*	80 CRI Typical	80 CRI Minimum	90 CRI Minimum
E6	3500 K	V4	440	491	XPLAWT-00-0000-000LV40E6	XPLAWT-00-0000-000HV40E6	
		V3	420	468	XPLAWT-00-0000-000LV30E6	XPLAWT-00-0000-000HV30E6	
		V2	400	446	XPLAWT-00-0000-000LV20E6		
Z6	3500 K	V4	440	491	XPLAWT-00-0000-000LV40Z6	XPLAWT-00-0000-000HV40Z6	
		V3	420	468	XPLAWT-00-0000-000LV30Z6	XPLAWT-00-0000-000HV30Z6	
		V2	400	446	XPLAWT-00-0000-000LV20Z6	XPLAWT-00-0000-000HV20Z6	
		U6	380	424	XPLAWT-00-0000-000LU60Z6		
F7	3250 K	V4	440	491	XPLAWT-00-0000-000LV40F7	XPLAWT-00-0000-000HV40F7	
		V3	420	468	XPLAWT-00-0000-000LV30F7	XPLAWT-00-0000-000HV30F7	
		V2	400	446	XPLAWT-00-0000-000LV20F7	XPLAWT-00-0000-000HV20F7	
		U6	380	424	XPLAWT-00-0000-000LU60F7		
E7	3000 K	V4	440	491	XPLAWT-00-0000-000LV40E7	XPLAWT-00-0000-000HV40E7	
		V3	420	468	XPLAWT-00-0000-000LV30E7	XPLAWT-00-0000-000HV30E7	
		V2	400	446	XPLAWT-00-0000-000LV20E7	XPLAWT-00-0000-000HV20E7	
		U6	380	424	XPLAWT-00-0000-000LU60E7		
		U5	360	401			XPLAWT-00-0000-000UU50E7
		U4	340	379			XPLAWT-00-0000-000UU40E7
		U3	320	357			XPLAWT-00-0000-000UU30E7
Z7	3000 K	V3	420	468	XPLAWT-00-0000-000LV30Z7	XPLAWT-00-0000-000HV30Z7	
		V2	400	446	XPLAWT-00-0000-000LV20Z7	XPLAWT-00-0000-000HV20Z7	
		U6	380	424	XPLAWT-00-0000-000LU60Z7	XPLAWT-00-0000-000HU60Z7	
		U5	360	401	XPLAWT-00-0000-000LU50Z7		XPLAWT-00-0000-000UU50Z7
		U4	340	379			XPLAWT-00-0000-000UU40Z7
		U3	320	357			XPLAWT-00-0000-000UU30Z7
F8	2850 K	V3	420	468	XPLAWT-00-0000-000LV30F8	XPLAWT-00-0000-000HV30F8	
		V2	400	446	XPLAWT-00-0000-000LV20F8	XPLAWT-00-0000-000HV20F8	
		U6	380	424	XPLAWT-00-0000-000LU60F8	XPLAWT-00-0000-000HU60F8	
		U5	360	401	XPLAWT-00-0000-000LU50F8		
		U4	340	379			XPLAWT-00-0000-000UU40F8
		U3	320	357			XPLAWT-00-0000-000UU30F8

Notes

- Cree LED maintains a tolerance of ±7% on flux and power measurements, ±0.005 on chromaticity (CCx, CCy) measurements and a tolerance of ±2 on CRI measurements. See the Measurements section (page 26).
- XLamp XP-L LED order codes specify only a minimum flux bin and not a maximum. Cree LED may ship reels in flux bins higher than the minimum specified by the order code without advance notice. Shipments will always adhere to the chromaticity bin restrictions specified by the order code.

* Flux values @ 25 °C are calculated and for reference only.

© 2014-2026 Cree LED. The information in this document is subject to change without notice. Cree®, the Cree logo, XLamp®, and the Cree LED logo are registered trademarks of Cree LED. UL® and the UL logo are registered trademarks of UL LLC. Other trademarks, product, and company names are the property of their respective owners and do not imply specific product and/or vendor endorsement, sponsorship or association.

Downloaded from Arrow.com.

ORDER CODES SUGGESTED FOR NEW DESIGNS - XP-L HIGH DENSITY (T_J = 85 °C) - CONTINUED

Chromaticity		Minimum Luminous Flux (lm) @ 1050 mA			Order Codes		
Kit	CCT	Code	Flux (lm) @ 85 °C	Flux (lm) @ 25 °C*	80 CRI Typical	80 CRI Minimum	90 CRI Minimum
E8	2700 K	V3	420	468	XPLAWT-00-0000-000LV30E8	XPLAWT-00-0000-000HV30E8	
		V2	400	446	XPLAWT-00-0000-000LV20E8	XPLAWT-00-0000-000HV20E8	
		U6	380	424	XPLAWT-00-0000-000LU60E8	XPLAWT-00-0000-000HU60E8	
		U5	360	401	XPLAWT-00-0000-000LU50E8		
		U4	340	379			XPLAWT-00-0000-000UU40E8
		U3	320	357			XPLAWT-00-0000-000UU30E8
		U2	300	334			XPLAWT-00-0000-000UU20E8
Z8	2700 K	V2	400	446	XPLAWT-00-0000-000LV20Z8	XPLAWT-00-0000-000HV20Z8	
		U6	380	424	XPLAWT-00-0000-000LU60Z8	XPLAWT-00-0000-000HU60Z8	
		U5	360	401	XPLAWT-00-0000-000LU50Z8	XPLAWT-00-0000-000HU50Z8	
		U4	340	379	XPLAWT-00-0000-000LU40Z8		XPLAWT-00-0000-000UU40Z8
		U3	320	357			XPLAWT-00-0000-000UU30Z8
		U2	300	334			XPLAWT-00-0000-000UU20Z8

Notes

- Cree LED maintains a tolerance of ±7% on flux and power measurements, ±0.005 on chromaticity (CCx, CCy) measurements and a tolerance of ±2 on CRI measurements. See the Measurements section (page 26).
- XLamp XP-L LED order codes specify only a minimum flux bin and not a maximum. Cree LED may ship reels in flux bins higher than the minimum specified by the order code without advance notice. Shipments will always adhere to the chromaticity bin restrictions specified by the order code.

* Flux values @ 25 °C are calculated and for reference only.

© 2014-2026 Cree LED. The information in this document is subject to change without notice. Cree®, the Cree logo, XLamp®, and the Cree LED logo are registered trademarks of Cree LED. UL® and the UL logo are registered trademarks of UL LLC. Other trademarks, product, and company names are the property of their respective owners and do not imply specific product and/or vendor endorsement, sponsorship or association.

Downloaded from Arrow.com.

ORDER CODES SUGGESTED FOR NEW DESIGNS - XP-L HIGH INTENSITY (T_J = 85 °C)

The following tables provide order codes for XLamp XP-L High Intensity LEDs. For a complete description of the order code nomenclature, please see the Bin and Order Code Formats section (page 24). For definitions of the chromaticity kits, please see the Standard Chromaticity Kits section (page 23).

Chromaticity		Minimum Luminous Flux (lm) @ 1050 mA			Order Codes	
Kit	CCT	Code	Flux (lm) @ 85 °C	Flux (lm) @ 25 °C*	65 CRI Typical	70 CRI Minimum
51	6200 K	V4	440	491	XPLAWT-H0-0000-0000V4051	XPLAWT-H0-0000-000BV4051
		V3	420	468	XPLAWT-H0-0000-0000V3051	XPLAWT-H0-0000-000BV3051
		V2	400	446	XPLAWT-H0-0000-0000V2051	XPLAWT-H0-0000-000BV2051
53	6000 K	V4	440	491	XPLAWT-H0-0000-0000V4053	XPLAWT-H0-0000-000BV4053
		V3	420	468	XPLAWT-H0-0000-0000V3053	XPLAWT-H0-0000-000BV3053
		V2	400	446	XPLAWT-H0-0000-0000V2053	XPLAWT-H0-0000-000BV2053
50	6200 K	V4	440	491	XPLAWT-H0-0000-0000V4050	XPLAWT-H0-0000-000BV4050
		V3	420	468	XPLAWT-H0-0000-0000V3050	XPLAWT-H0-0000-000BV3050
		V2	400	446	XPLAWT-H0-0000-0000V2050	XPLAWT-H0-0000-000BV2050
E1	6500 K	V4	440	491	XPLAWT-H0-0000-0000V40E1	XPLAWT-H0-0000-000BV40E1
		V3	420	468	XPLAWT-H0-0000-0000V30E1	XPLAWT-H0-0000-000BV30E1
		V2	400	446	XPLAWT-H0-0000-0000V20E1	XPLAWT-H0-0000-000BV20E1
E2	5700 K	V4	440	491	XPLAWT-H0-0000-0000V40E2	XPLAWT-H0-0000-000BV40E2
		V3	420	468	XPLAWT-H0-0000-0000V30E2	XPLAWT-H0-0000-000BV30E2
		V2	400	446	XPLAWT-H0-0000-0000V20E2	XPLAWT-H0-0000-000BV20E2

Notes

- Cree LED maintains a tolerance of ±7% on flux and power measurements, ±0.005 on chromaticity (CCx, CCy) measurements and a tolerance of ±2 on CRI measurements. See the Measurements section (page 26).
- XLamp XP-L LED order codes specify only a minimum flux bin and not a maximum. Cree LED may ship reels in flux bins higher than the minimum specified by the order code without advance notice. Shipments will always adhere to the chromaticity bin restrictions specified by the order code.

* Flux values @ 25 °C are calculated and for reference only.

© 2014-2026 Cree LED. The information in this document is subject to change without notice. Cree®, the Cree logo, XLamp®, and the Cree LED logo are registered trademarks of Cree LED. UL® and the UL logo are registered trademarks of UL LLC. Other trademarks, product, and company names are the property of their respective owners and do not imply specific product and/or vendor endorsement, sponsorship or association.

Downloaded from Arrow.com.

ORDER CODES SUGGESTED FOR NEW DESIGNS - XP-L HIGH INTENSITY (T_J = 85 °C) - CONTINUED

Chromaticity		Minimum Luminous Flux (lm) @ 1050 mA			Order Codes		
Kit	CCT	Code	Flux (lm) @ 85 °C	Flux (lm) @ 25 °C*	70 CRI Minimum	75 CRI Typical	80 CRI Minimum
E3	5000 K	V4	440	491	XPLAWT-H0-0000-000BV40E3	XPLAWT-H0-0000-000LV40E3	
		V3	420	468	XPLAWT-H0-0000-000BV30E3	XPLAWT-H0-0000-000LV30E3	
		V2	400	446	XPLAWT-H0-0000-000BV20E3	XPLAWT-H0-0000-000LV20E3	
F4	4750 K	V4	440	491	XPLAWT-H0-0000-000BV40F4	XPLAWT-H0-0000-000LV40F4	
		V3	420	468	XPLAWT-H0-0000-000BV30F4	XPLAWT-H0-0000-000LV30F4	
		V2	400	446	XPLAWT-H0-0000-000BV20F4	XPLAWT-H0-0000-000LV20F4	
E4	4500 K	V4	440	491	XPLAWT-H0-0000-000BV40E4	XPLAWT-H0-0000-000LV40E4	
		V3	420	468	XPLAWT-H0-0000-000BV30E4	XPLAWT-H0-0000-000LV30E4	
		V2	400	446	XPLAWT-H0-0000-000BV20E4	XPLAWT-H0-0000-000LV20E4	
F5	4250 K	V4	440	491	XPLAWT-H0-0000-000BV40F5		
		V3	420	468	XPLAWT-H0-0000-000BV30F5	XPLAWT-H0-0000-000LV30F5	
		V2	400	446	XPLAWT-H0-0000-000BV20F5	XPLAWT-H0-0000-000LV20F5	
		U6	380	424		XPLAWT-H0-0000-000LU60F5	
E5	4000 K	V4	440	491	XPLAWT-H0-0000-000BV40E5		
		V3	420	468	XPLAWT-H0-0000-000BV30E5	XPLAWT-H0-0000-000LV30E5	XPLAWT-H0-0000-000HV30E5
		V2	400	446	XPLAWT-H0-0000-000BV20E5	XPLAWT-H0-0000-000LV20E5	XPLAWT-H0-0000-000HV20E5
		U6	380	424		XPLAWT-H0-0000-000LU60E5	XPLAWT-H0-0000-000HU60E5
F6	3700 K	V2	400	446		XPLAWT-H0-0000-000LV20F6	XPLAWT-H0-0000-000HV20F6
		U6	380	424		XPLAWT-H0-0000-000LU60F6	XPLAWT-H0-0000-000HU60F6
		U5	360	401			XPLAWT-H0-0000-000HU50F6

Notes

- Cree LED maintains a tolerance of ±7% on flux and power measurements, ±0.005 on chromaticity (CCx, CCy) measurements and a tolerance of ±2 on CRI measurements. See the Measurements section (page 26).
- XLamp XP-L LED order codes specify only a minimum flux bin and not a maximum. Cree LED may ship reels in flux bins higher than the minimum specified by the order code without advance notice. Shipments will always adhere to the chromaticity bin restrictions specified by the order code.

* Flux values @ 25 °C are calculated and for reference only.

© 2014-2026 Cree LED. The information in this document is subject to change without notice. Cree®, the Cree logo, XLamp®, and the Cree LED logo are registered trademarks of Cree LED. UL® and the UL logo are registered trademarks of UL LLC. Other trademarks, product, and company names are the property of their respective owners and do not imply specific product and/or vendor endorsement, sponsorship or association.

Downloaded from Arrow.com.

ORDER CODES SUGGESTED FOR NEW DESIGNS - XP-L HIGH INTENSITY (T_J = 85 °C) - CONTINUED

Chromaticity		Minimum Luminous Flux (lm) @ 1050 mA			Order Codes		
Kit	CCT	Code	Flux (lm) @ 85 °C	Flux (lm) @ 25 °C*	80 CRI Typical	80 CRI Minimum	90 CRI Minimum
E6	3500 K	V2	400	446	XPLAWT-H0-0000-000LV20E6	XPLAWT-H0-0000-000HV20E6	
		U6	380	424	XPLAWT-H0-0000-000LU60E6	XPLAWT-H0-0000-000HU60E6	
		U5	360	401		XPLAWT-H0-0000-000HU50E6	
F7	3250 K	V2	400	446	XPLAWT-H0-0000-000LV20F7	XPLAWT-H0-0000-000HV20F7	
		U6	380	424	XPLAWT-H0-0000-000LU60F7	XPLAWT-H0-0000-000HU60F7	
		U5	360	401	XPLAWT-H0-0000-000LU50F7	XPLAWT-H0-0000-000HU50F7	
E7	3000 K	V2	400	446	XPLAWT-H0-0000-000LV20E7	XPLAWT-H0-0000-000HV20E7	
		U6	380	424	XPLAWT-H0-0000-000LU60E7	XPLAWT-H0-0000-000HU60E7	
		U5	360	401	XPLAWT-H0-0000-000LU50E7	XPLAWT-H0-0000-000HU50E7	
		U4	340	379			
		U3	320	357			XPLAWT-H0-0000-000UU30E7
		U2	300	334			XPLAWT-H0-0000-000UU20E7
		T6	280	312			XPLAWT-H0-0000-000UT60E7
F8	2850 K	U6	380	424	XPLAWT-H0-0000-000LU60F8	XPLAWT-H0-0000-000HU60F8	
		U5	360	401	XPLAWT-H0-0000-000LU50F8	XPLAWT-H0-0000-000HU50F8	
		U4	340	379		XPLAWT-H0-0000-000HU40F8	
		U3	320	357			
		U2	300	334			XPLAWT-H0-0000-000UU20F8
		T6	280	312			XPLAWT-H0-0000-000UT60F8
		T5	260	290			XPLAWT-H0-0000-000UT50F8
E8	2700 K	U6	380	424	XPLAWT-H0-0000-000LU60E8	XPLAWT-H0-0000-000HU60E8	
		U5	360	401	XPLAWT-H0-0000-000LU50E8	XPLAWT-H0-0000-000HU50E8	
		U4	340	379		XPLAWT-H0-0000-000HU40E8	
		U3	320	357			
		U2	300	334			XPLAWT-H0-0000-000UU20E8
		T6	280	312			XPLAWT-H0-0000-000UT60E8
		T5	260	290			XPLAWT-H0-0000-000UT50E8

Notes

- Cree LED maintains a tolerance of ±7% on flux and power measurements, ±0.005 on chromaticity (CCx, CCy) measurements and a tolerance of ±2 on CRI measurements. See the Measurements section (page 26).
- XLamp XP-L LED order codes specify only a minimum flux bin and not a maximum. Cree LED may ship reels in flux bins higher than the minimum specified by the order code without advance notice. Shipments will always adhere to the chromaticity bin restrictions specified by the order code.

* Flux values @ 25 °C are calculated and for reference only.

© 2014-2026 Cree LED. The information in this document is subject to change without notice. Cree®, the Cree logo, XLamp®, and the Cree LED logo are registered trademarks of Cree LED. UL® and the UL logo are registered trademarks of UL LLC. Other trademarks, product, and company names are the property of their respective owners and do not imply specific product and/or vendor endorsement, sponsorship or association.

Downloaded from Arrow.com.

RELATIVE SPECTRAL POWER DISTRIBUTION

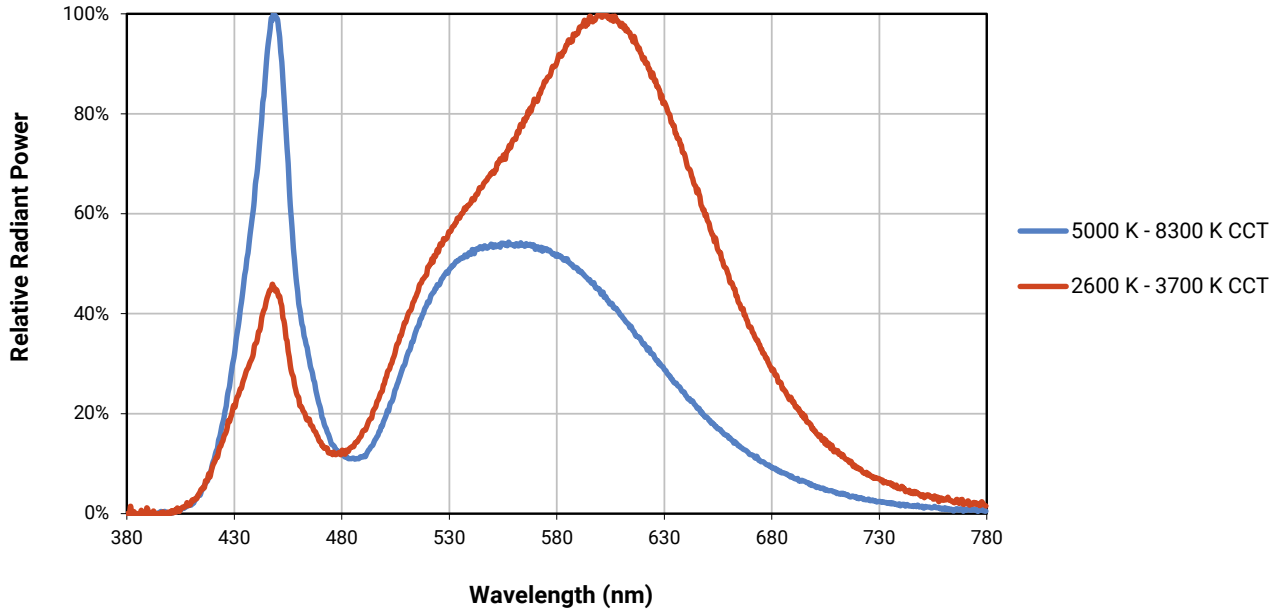

RELATIVE FLUX VS. JUNCTION TEMPERATURE (I_F = 1050 mA)

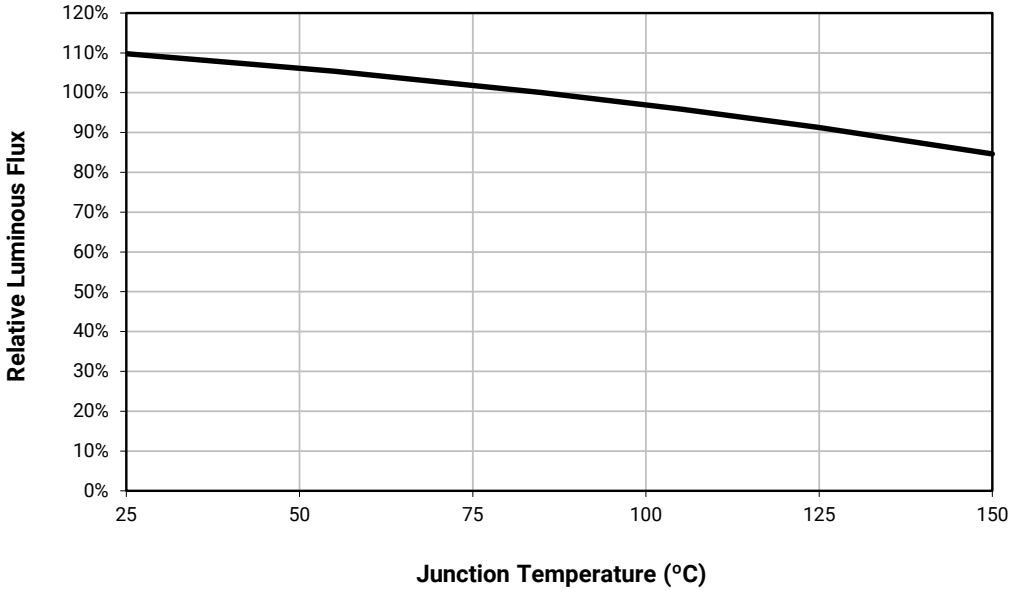

© 2014-2026 Cree LED. The information in this document is subject to change without notice. Cree®, the Cree logo, XLamp®, and the Cree LED logo are registered trademarks of Cree LED. UL® and the UL logo are registered trademarks of UL LLC. Other trademarks, product, and company names are the property of their respective owners and do not imply specific product and/or vendor endorsement, sponsorship or association.

Downloaded from Arrow.com.

ELECTRICAL CHARACTERISTICS (T_J = 85 °C)

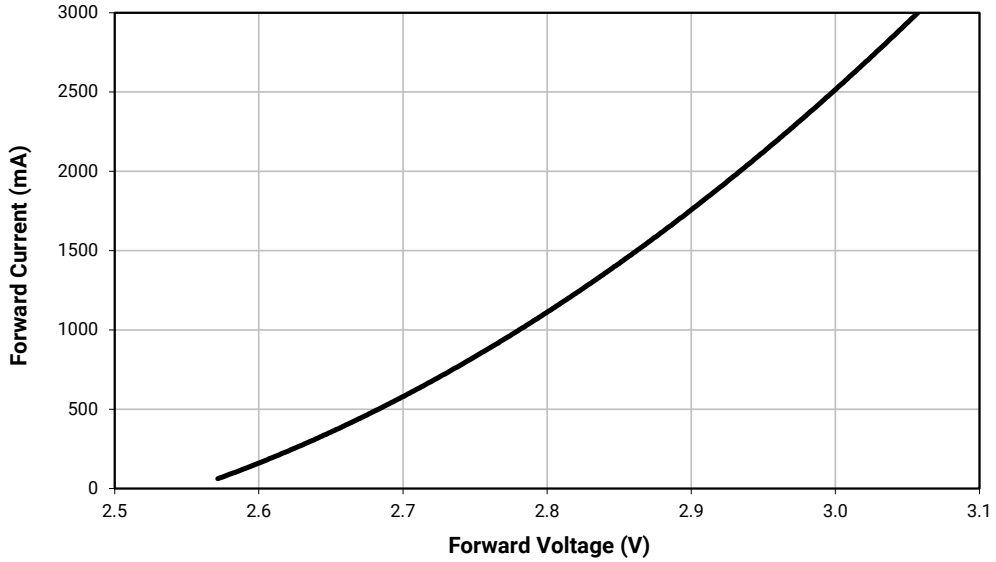

RELATIVE FLUX VS. CURRENT (T_J = 85 °C)

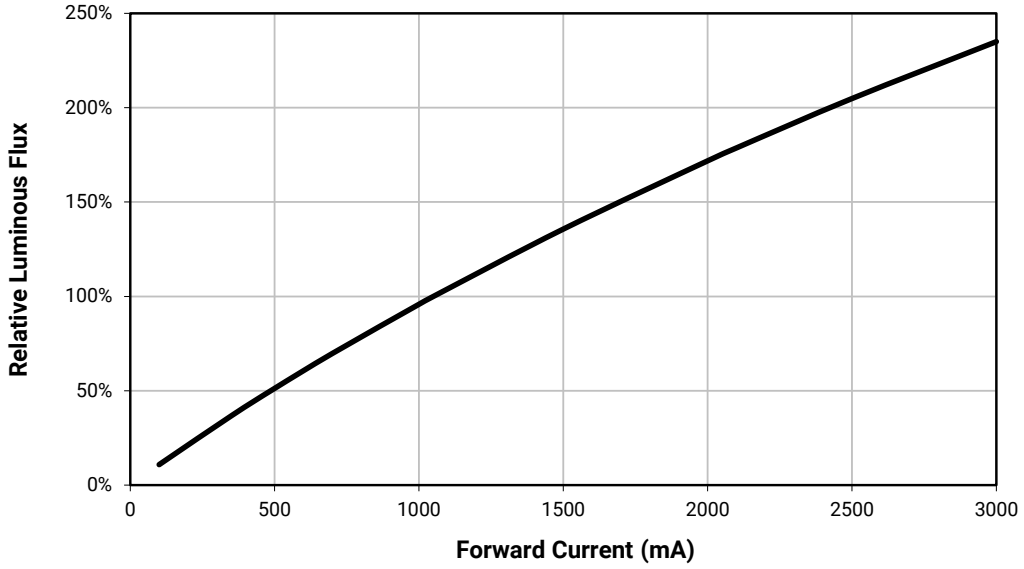

© 2014-2026 Cree LED. The information in this document is subject to change without notice. Cree®, the Cree logo, XLamp®, and the Cree LED logo are registered trademarks of Cree LED. UL® and the UL logo are registered trademarks of UL LLC. Other trademarks, product, and company names are the property of their respective owners and do not imply specific product and/or vendor endorsement, sponsorship or association.

Downloaded from Arrow.com.

RELATIVE CHROMATICITY VS. CURRENT (WARM WHITE)

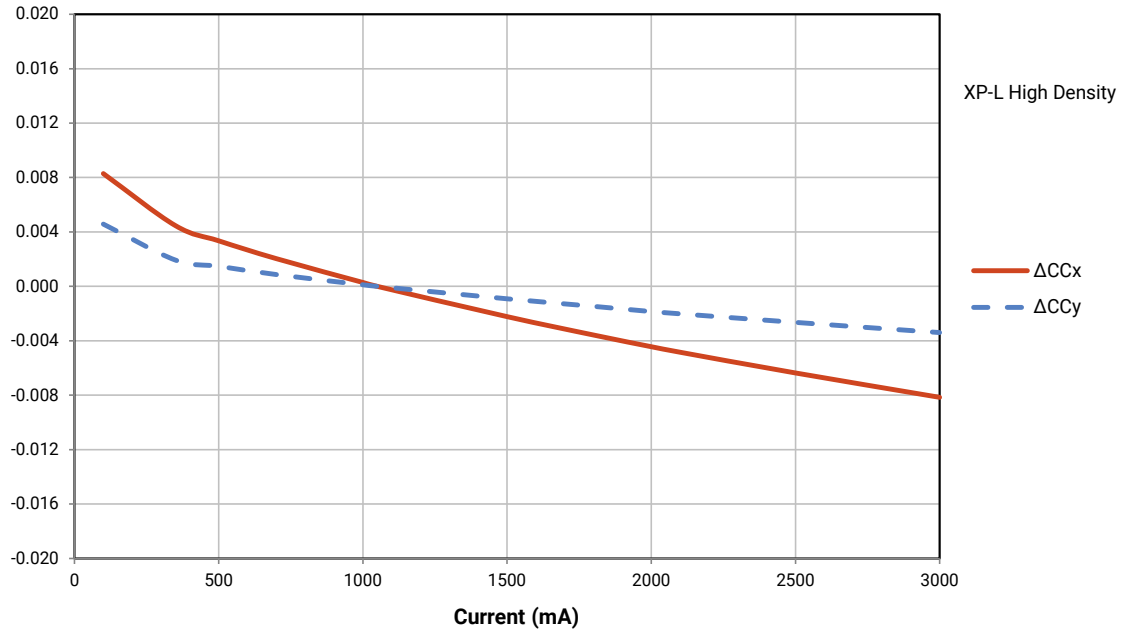

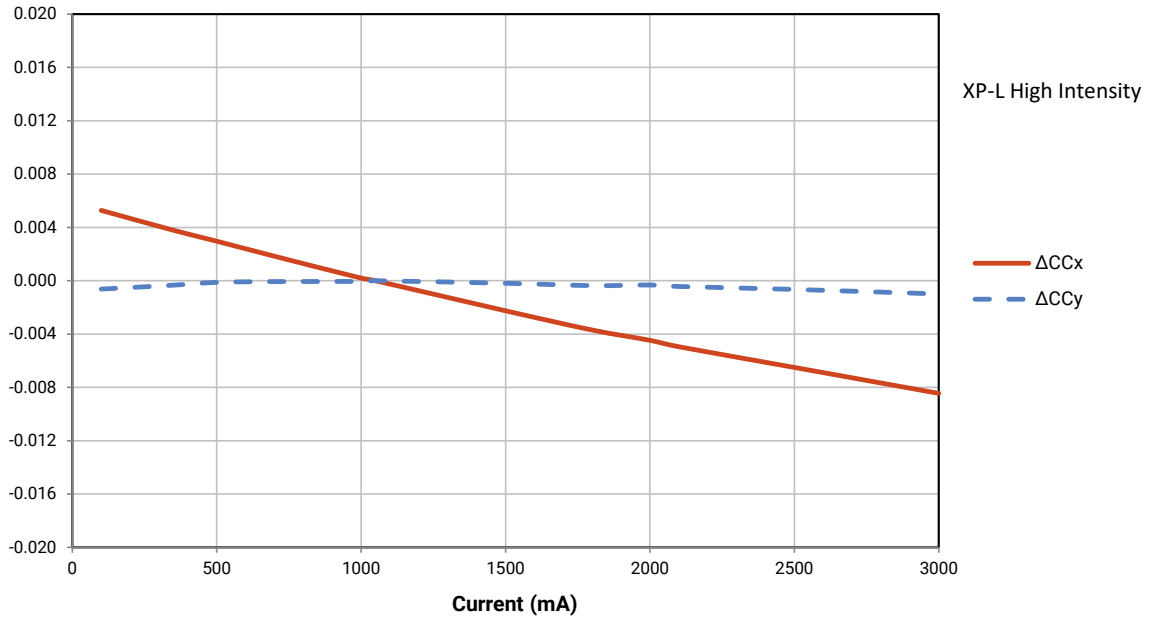

© 2014-2026 Cree LED. The information in this document is subject to change without notice. Cree®, the Cree logo, XLamp®, and the Cree LED logo are registered trademarks of Cree LED. UL® and the UL logo are registered trademarks of UL LLC. Other trademarks, product, and company names are the property of their respective owners and do not imply specific product and/or vendor endorsement, sponsorship or association.

Downloaded from Arrow.com.

RELATIVE CHROMATICITY VS. TEMPERATURE (WARM WHITE)

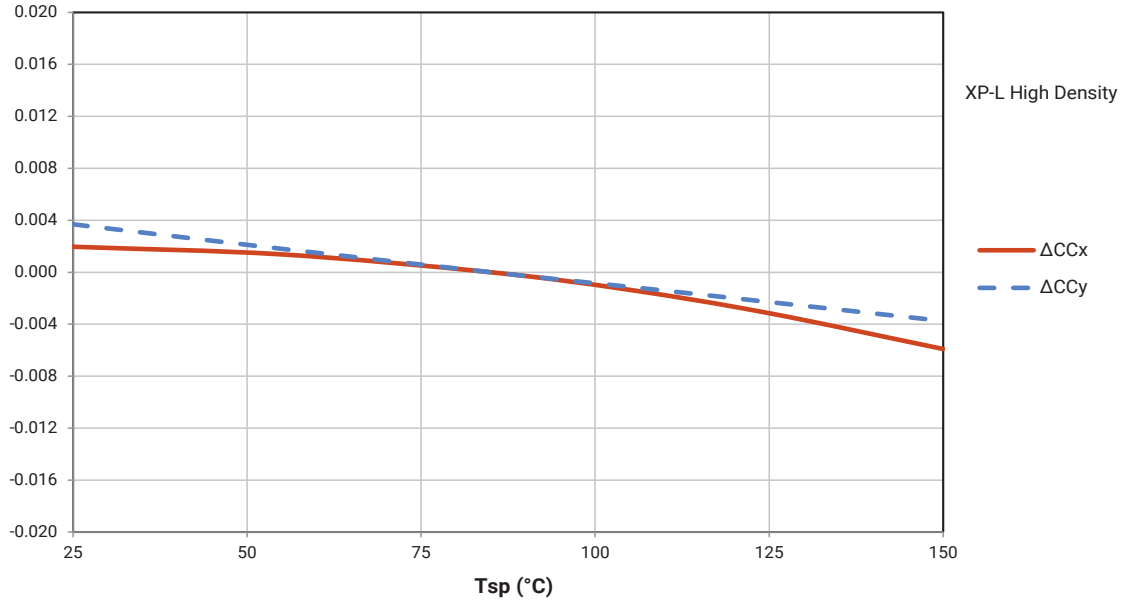

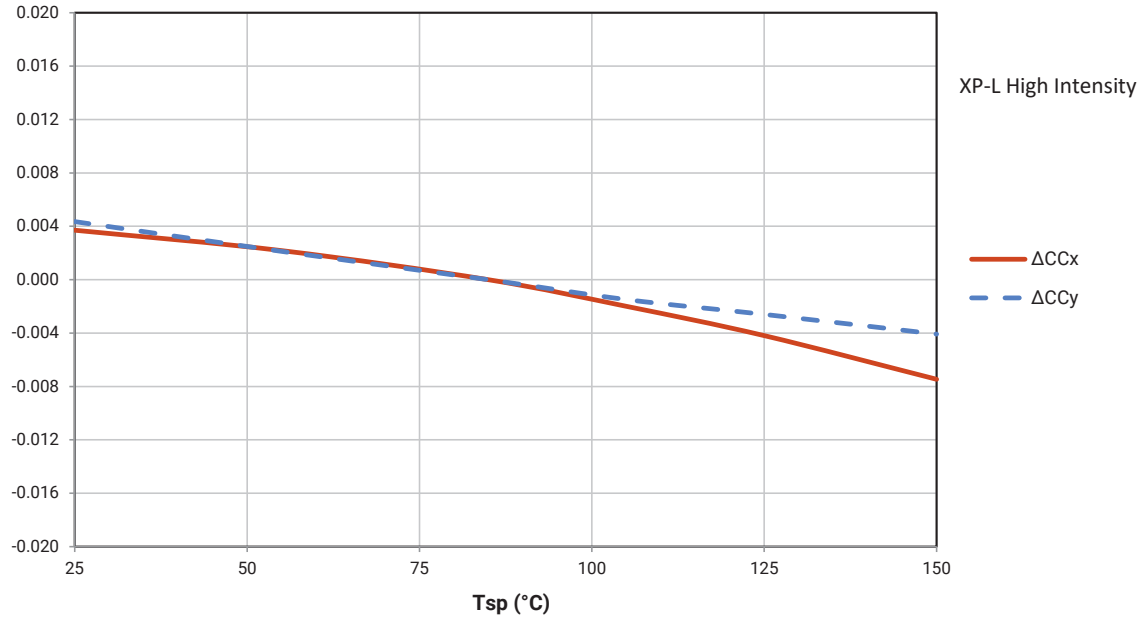

© 2014-2026 Cree LED. The information in this document is subject to change without notice. Cree®, the Cree logo, XLamp®, and the Cree LED logo are registered trademarks of Cree LED. UL® and the UL logo are registered trademarks of UL LLC. Other trademarks, product, and company names are the property of their respective owners and do not imply specific product and/or vendor endorsement, sponsorship or association.

Downloaded from Arrow.com.

TYPICAL SPATIAL DISTRIBUTION

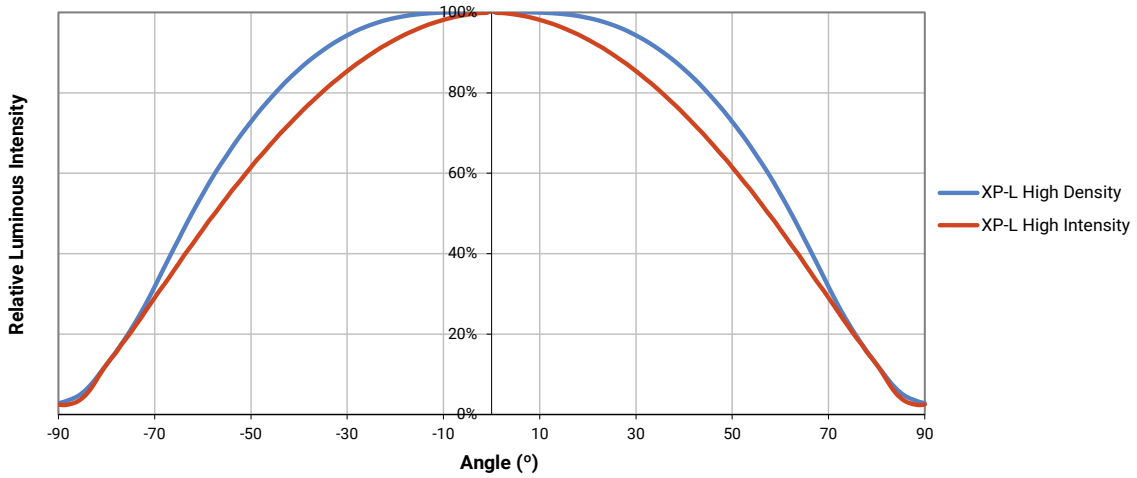

THERMAL DESIGN

The maximum forward current is determined by the thermal resistance between the LED junction and ambient. It is crucial for the end product to be designed in a manner that minimizes the thermal resistance from the solder point to ambient in order to optimize lamp life and optical characteristics.

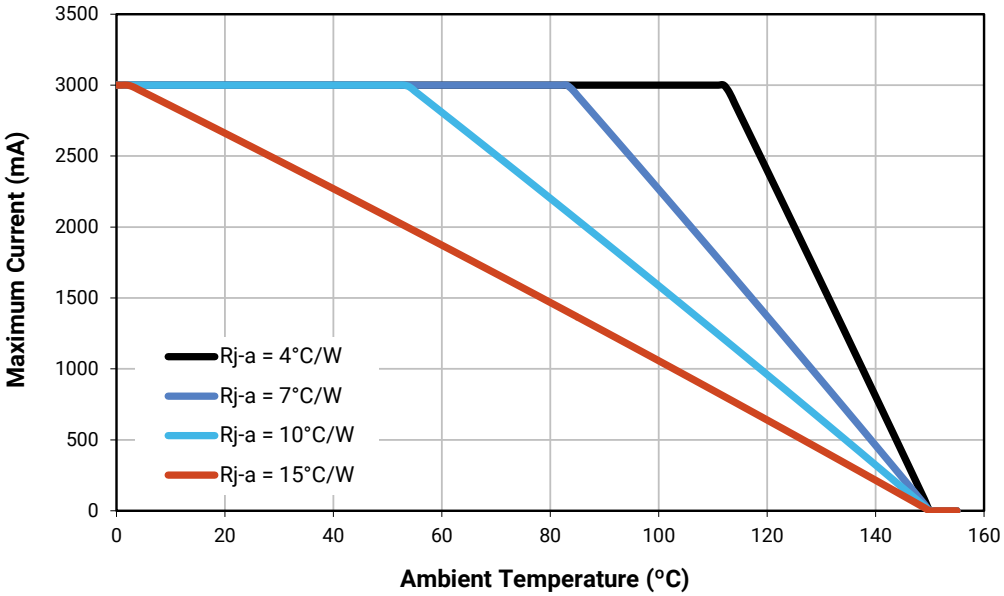

© 2014-2026 Cree LED. The information in this document is subject to change without notice. Cree®, the Cree logo, XLamp®, and the Cree LED logo are registered trademarks of Cree LED. UL® and the UL logo are registered trademarks of UL LLC. Other trademarks, product, and company names are the property of their respective owners and do not imply specific product and/or vendor endorsement, sponsorship or association.

Downloaded from Arrow.com.

PERFORMANCE GROUPS - LUMINOUS FLUX

XLamp XP-L LEDs are tested for luminous flux and placed into one of the following luminous-flux groups:

Group Code	Minimum Luminous Flux (lm) @ 1050 mA	Maximum Luminous Flux (lm) @ 1050 mA
T3	220	240
T4	240	260
T5	260	280
T6	280	300
U2	300	320
U3	320	340
U4	340	360
U5	360	380
U6	380	400
V2	400	420
V3	420	440
V4	440	460
V5	460	480
V6	480	500
W2	500	520
W3	520	540

© 2014-2026 Cree LED. The information in this document is subject to change without notice. Cree®, the Cree logo, XLamp®, and the Cree LED logo are registered trademarks of Cree LED. UL® and the UL logo are registered trademarks of UL LLC. Other trademarks, product, and company names are the property of their respective owners and do not imply specific product and/or vendor endorsement, sponsorship or association.

Downloaded from Arrow.com.

PERFORMANCE GROUPS - CHROMATICITY

Region	x	y	Region	x	y	Region	x	y	Region	x	y
0A	0.2950	0.2970	0B	0.2920	0.3060	0C	0.2984	0.3133	0D	0.2984	0.3133
	0.2920	0.3060		0.2895	0.3135		0.2962	0.3220		0.3048	0.3207
	0.2984	0.3133		0.2962	0.3220		0.3028	0.3304		0.3068	0.3113
	0.3009	0.3042		0.2984	0.3133		0.3048	0.3207		0.3009	0.3042
0R	0.2980	0.2880	0S	0.2895	0.3135	0T	0.2962	0.3220	0U	0.3037	0.2937
	0.2950	0.2970		0.2870	0.3210		0.2937	0.3312		0.3009	0.3042
	0.3009	0.3042		0.2937	0.3312		0.3005	0.3415		0.3068	0.3113
	0.3037	0.2937		0.2962	0.3220		0.3028	0.3304		0.3093	0.2993
1A	0.3048	0.3207	1B	0.3028	0.3304	1C	0.3115	0.3391	1D	0.3130	0.3290
	0.3130	0.3290		0.3115	0.3391		0.3205	0.3481		0.3213	0.3373
	0.3144	0.3186		0.3130	0.3290		0.3213	0.3373		0.3221	0.3261
	0.3068	0.3113		0.3048	0.3207		0.3130	0.3290		0.3144	0.3186
1R	0.3068	0.3113	1S	0.3005	0.3415	1T	0.3099	0.3509	1U	0.3144	0.3186
	0.3144	0.3186		0.3099	0.3509		0.3196	0.3602		0.3221	0.3261
	0.3161	0.3059		0.3115	0.3391		0.3205	0.3481		0.3231	0.3120
	0.3093	0.2993		0.3028	0.3304		0.3115	0.3391		0.3161	0.3059
2A	0.3215	0.3350	2B	0.3207	0.3462	2C	0.3290	0.3538	2D	0.3290	0.3417
	0.3290	0.3417		0.3290	0.3538		0.3376	0.3616		0.3371	0.3490
	0.3290	0.3300		0.3290	0.3417		0.3371	0.3490		0.3366	0.3369
	0.3222	0.3243		0.3215	0.3350		0.3290	0.3417		0.3290	0.3300
2R	0.3222	0.3243	2S	0.3196	0.3602	2T	0.3290	0.3690	2U	0.3290	0.3300
	0.3290	0.3300		0.3290	0.3690		0.3381	0.3762		0.3366	0.3369
	0.3290	0.3180		0.3290	0.3538		0.3376	0.3616		0.3361	0.3245
	0.3231	0.3120		0.3207	0.3462		0.3290	0.3538		0.3290	0.3180
3A	0.3371	0.3490	3B	0.3376	0.3616	3R	0.3366	0.3369	3S	0.3381	0.3762
	0.3451	0.3554		0.3463	0.3687		0.3440	0.3428		0.3480	0.3840
	0.3440	0.3427		0.3451	0.3554		0.3429	0.3307		0.3463	0.3687
	0.3366	0.3369		0.3371	0.3490		0.3361	0.3245		0.3376	0.3616
4A	0.3530	0.3597	4B	0.3548	0.3736	4C	0.3641	0.3804	4D	0.3615	0.3659
	0.3615	0.3659		0.3641	0.3804		0.3736	0.3874		0.3702	0.3722
	0.3590	0.3521		0.3615	0.3659		0.3702	0.3722		0.3670	0.3578
	0.3512	0.3465		0.3530	0.3597		0.3615	0.3659		0.3590	0.3521
4R	0.3512	0.3465	4S	0.3571	0.3907	4T	0.3668	0.3957	4U	0.3590	0.3521
	0.3590	0.3521		0.3668	0.3957		0.3771	0.4034		0.3670	0.3578
	0.3567	0.3389		0.3641	0.3804		0.3736	0.3874		0.3640	0.3440
	0.3495	0.3339		0.3548	0.3736		0.3641	0.3804		0.3567	0.3389

© 2014-2026 Cree LED. The information in this document is subject to change without notice. Cree®, the Cree logo, XLamp®, and the Cree LED logo are registered trademarks of Cree LED. UL® and the UL logo are registered trademarks of UL LLC. Other trademarks, product, and company names are the property of their respective owners and do not imply specific product and/or vendor endorsement, sponsorship or association.

Downloaded from Arrow.com.

PERFORMANCE GROUPS - CHROMATICITY (CONTINUED)

Region	x	y	Region	x	y	Region	x	y	Region	x	y
5A1	0.3670	0.3578	5A2	0.3686	0.3649	5A3	0.3744	0.3685	5A4	0.3726	0.3612
	0.3686	0.3649		0.3702	0.3722		0.3763	0.3760		0.3744	0.3685
	0.3744	0.3685		0.3763	0.3760		0.3825	0.3798		0.3804	0.3721
	0.3726	0.3612		0.3744	0.3685		0.3804	0.3721		0.3783	0.3646
5B1	0.3702	0.3722	5B2	0.3719	0.3797	5B3	0.3782	0.3837	5B4	0.3763	0.3760
	0.3719	0.3797		0.3736	0.3874		0.3802	0.3916		0.3782	0.3837
	0.3782	0.3837		0.3802	0.3916		0.3869	0.3958		0.3847	0.3877
	0.3763	0.3760		0.3782	0.3837		0.3847	0.3877		0.3825	0.3798
5C1	0.3825	0.3798	5C2	0.3847	0.3877	5C3	0.3912	0.3917	5C4	0.3887	0.3836
	0.3847	0.3877		0.3869	0.3958		0.3937	0.4001		0.3912	0.3917
	0.3912	0.3917		0.3937	0.4001		0.4006	0.4044		0.3978	0.3958
	0.3887	0.3836		0.3912	0.3917		0.3978	0.3958		0.3950	0.3875
5D1	0.3783	0.3646	5D2	0.3804	0.3721	5D3	0.3863	0.3758	5D4	0.3840	0.3681
	0.3804	0.3721		0.3825	0.3798		0.3887	0.3836		0.3863	0.3758
	0.3863	0.3758		0.3887	0.3836		0.3950	0.3875		0.3924	0.3794
	0.3840	0.3681		0.3863	0.3758		0.3924	0.3794		0.3898	0.3716
6A1	0.3889	0.3690	6A2	0.3915	0.3768	6A3	0.3981	0.3800	6A4	0.3953	0.3720
	0.3915	0.3768		0.3941	0.3848		0.4010	0.3882		0.3981	0.3800
	0.3981	0.3800		0.4010	0.3882		0.4080	0.3916		0.4048	0.3832
	0.3953	0.3720		0.3981	0.3800		0.4048	0.3832		0.4017	0.3751
6B1	0.3941	0.3848	6B2	0.3968	0.3930	6B3	0.4040	0.3966	6B4	0.4010	0.3882
	0.3968	0.3930		0.3996	0.4015		0.4071	0.4052		0.4040	0.3966
	0.4040	0.3966		0.4071	0.4052		0.4146	0.4089		0.4113	0.4001
	0.4010	0.3882		0.4040	0.3966		0.4113	0.4001		0.4080	0.3916
6C1	0.4080	0.3916	6C2	0.4113	0.4001	6C3	0.4186	0.4037	6C4	0.4150	0.3950
	0.4113	0.4001		0.4146	0.4089		0.4222	0.4127		0.4186	0.4037
	0.4186	0.4037		0.4222	0.4127		0.4299	0.4165		0.4259	0.4073
	0.4150	0.3950		0.4186	0.4037		0.4259	0.4073		0.4221	0.3984
6D1	0.4017	0.3751	6D2	0.4048	0.3832	6D3	0.4116	0.3865	6D4	0.4082	0.3782
	0.4048	0.3832		0.4080	0.3916		0.4150	0.3950		0.4116	0.3865
	0.4116	0.3865		0.4150	0.3950		0.4221	0.3984		0.4183	0.3898
	0.4082	0.3782		0.4116	0.3865		0.4183	0.3898		0.4147	0.3814
7A1	0.4147	0.3814	7A2	0.4183	0.3898	7A3	0.4242	0.3919	7A4	0.4203	0.3833
	0.4183	0.3898		0.4221	0.3984		0.4281	0.4006		0.4242	0.3919
	0.4242	0.3919		0.4281	0.4006		0.4342	0.4028		0.4300	0.3939
	0.4203	0.3833		0.4242	0.3919		0.4300	0.3939		0.4259	0.3853

© 2014-2026 Cree LED. The information in this document is subject to change without notice. Cree®, the Cree logo, XLamp®, and the Cree LED logo are registered trademarks of Cree LED. UL® and the UL logo are registered trademarks of UL LLC. Other trademarks, product, and company names are the property of their respective owners and do not imply specific product and/or vendor endorsement, sponsorship or association.

Downloaded from Arrow.com.

PERFORMANCE GROUPS - CHROMATICITY (CONTINUED)

Region	x	y	Region	x	y	Region	x	y	Region	x	y
7B1	0.4221	0.3984	7B2	0.4259	0.4073	7B3	0.4322	0.4096	7B4	0.4281	0.4006
	0.4259	0.4073		0.4299	0.4165		0.4364	0.4188		0.4322	0.4096
	0.4322	0.4096		0.4364	0.4188		0.4430	0.4212		0.4385	0.4119
	0.4281	0.4006		0.4322	0.4096		0.4385	0.4119		0.4342	0.4028
7C1	0.4342	0.4028	7C2	0.4385	0.4119	7C3	0.4449	0.4141	7C4	0.4403	0.4049
	0.4385	0.4119		0.4430	0.4212		0.4496	0.4236		0.4449	0.4141
	0.4449	0.4141		0.4496	0.4236		0.4562	0.4260		0.4513	0.4164
	0.4403	0.4049		0.4449	0.4141		0.4513	0.4164		0.4465	0.4071
7D1	0.4259	0.3853	7D2	0.4300	0.3939	7D3	0.4359	0.3960	7D4	0.4316	0.3873
	0.4300	0.3939		0.4342	0.4028		0.4403	0.4049		0.4359	0.3960
	0.4359	0.3960		0.4403	0.4049		0.4465	0.4071		0.4418	0.3981
	0.4316	0.3873		0.4359	0.3960		0.4418	0.3981		0.4373	0.3893
8A1	0.4373	0.3893	8A2	0.4418	0.3981	8A3	0.4475	0.3994	8A4	0.4428	0.3906
	0.4418	0.3981		0.4465	0.4071		0.4523	0.4085		0.4475	0.3994
	0.4475	0.3994		0.4523	0.4085		0.4582	0.4099		0.4532	0.4008
	0.4428	0.3906		0.4475	0.3994		0.4532	0.4008		0.4483	0.3919
8B1	0.4465	0.4071	8B2	0.4513	0.4164	8B3	0.4573	0.4178	8B4	0.4523	0.4085
	0.4513	0.4164		0.4562	0.4260		0.4624	0.4274		0.4573	0.4178
	0.4573	0.4178		0.4624	0.4274		0.4687	0.4289		0.4634	0.4193
	0.4523	0.4085		0.4573	0.4178		0.4634	0.4193		0.4582	0.4099
8C1	0.4582	0.4099	8C2	0.4634	0.4193	8C3	0.4695	0.4207	8C4	0.4641	0.4112
	0.4634	0.4193		0.4687	0.4289		0.4750	0.4304		0.4695	0.4207
	0.4695	0.4207		0.4750	0.4304		0.4813	0.4319		0.4756	0.4221
	0.4641	0.4112		0.4695	0.4207		0.4756	0.4221		0.4700	0.4126
8D1	0.4483	0.3919	8D2	0.4532	0.4008	8D3	0.4589	0.4021	8D4	0.4538	0.3931
	0.4532	0.4008		0.4582	0.4099		0.4641	0.4112		0.4589	0.4021
	0.4589	0.4021		0.4641	0.4112		0.4700	0.4126		0.4646	0.4034
	0.4538	0.3931		0.4589	0.4021		0.4646	0.4034		0.4593	0.3944

© 2014-2026 Cree LED. The information in this document is subject to change without notice. Cree®, the Cree logo, XLamp®, and the Cree LED logo are registered trademarks of Cree LED. UL® and the UL logo are registered trademarks of UL LLC. Other trademarks, product, and company names are the property of their respective owners and do not imply specific product and/or vendor endorsement, sponsorship or association.

Downloaded from Arrow.com.

STANDARD COOL WHITE KITS PLOTTED ON ANSI STANDARD CHROMATICITY REGIONS

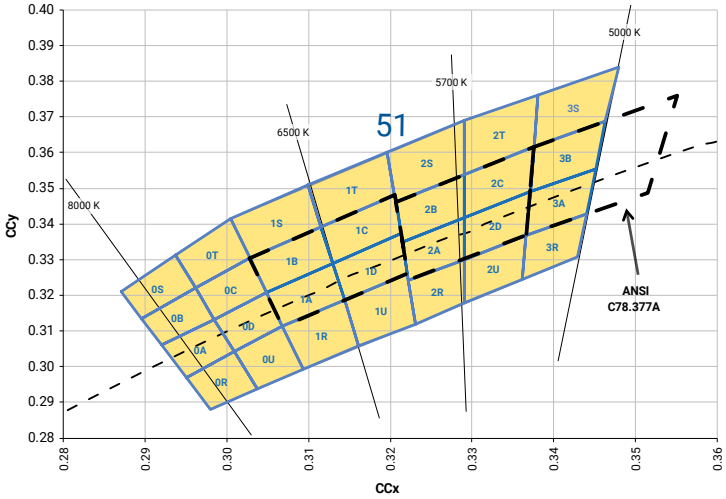

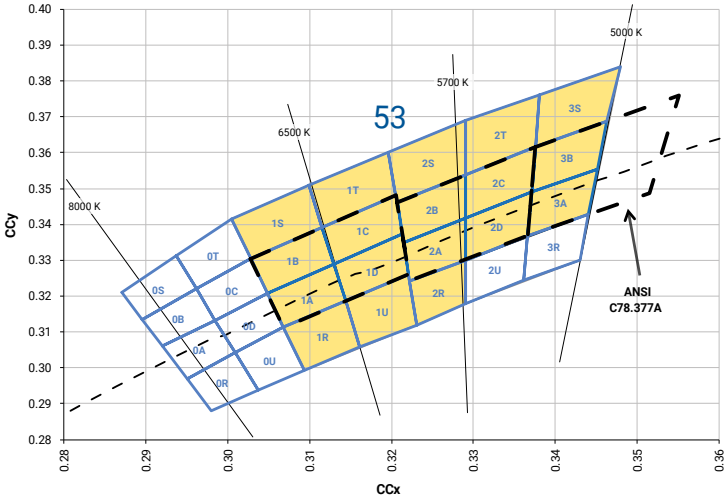

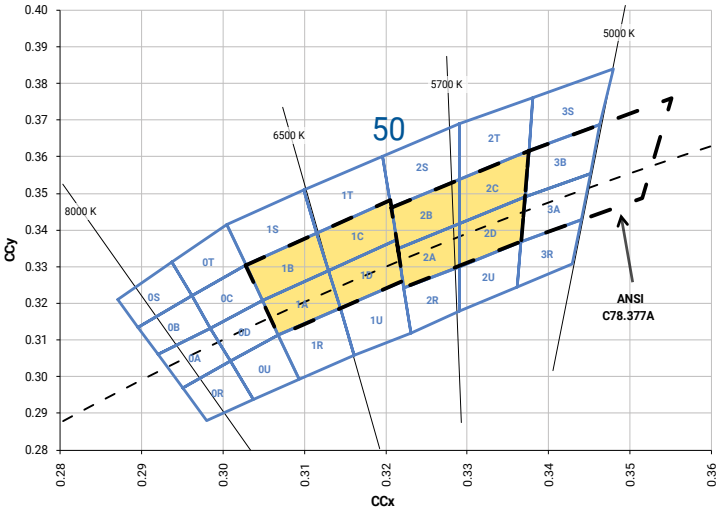

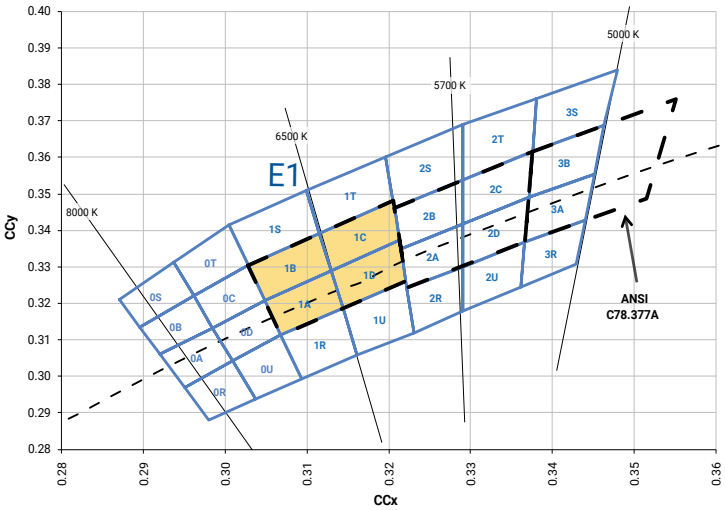

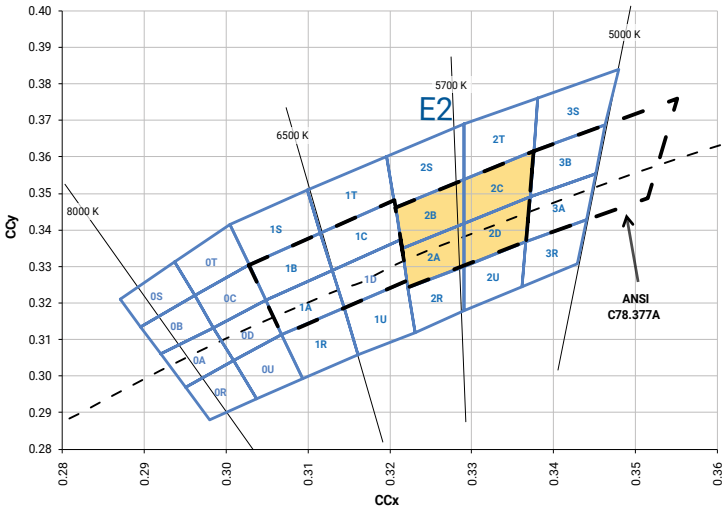

© 2014-2026 Cree LED. The information in this document is subject to change without notice. Cree®, the Cree logo, XLamp®, and the Cree LED logo are registered trademarks of Cree LED. UL® and the UL logo are registered trademarks of UL LLC. Other trademarks, product, and company names are the property of their respective owners and do not imply specific product and/or vendor endorsement, sponsorship or association.

Downloaded from Arrow.com.

STANDARD WARM AND NEUTRAL WHITE KITS PLOTTED ON ANSI STANDARD CHROMATICITY REGIONS

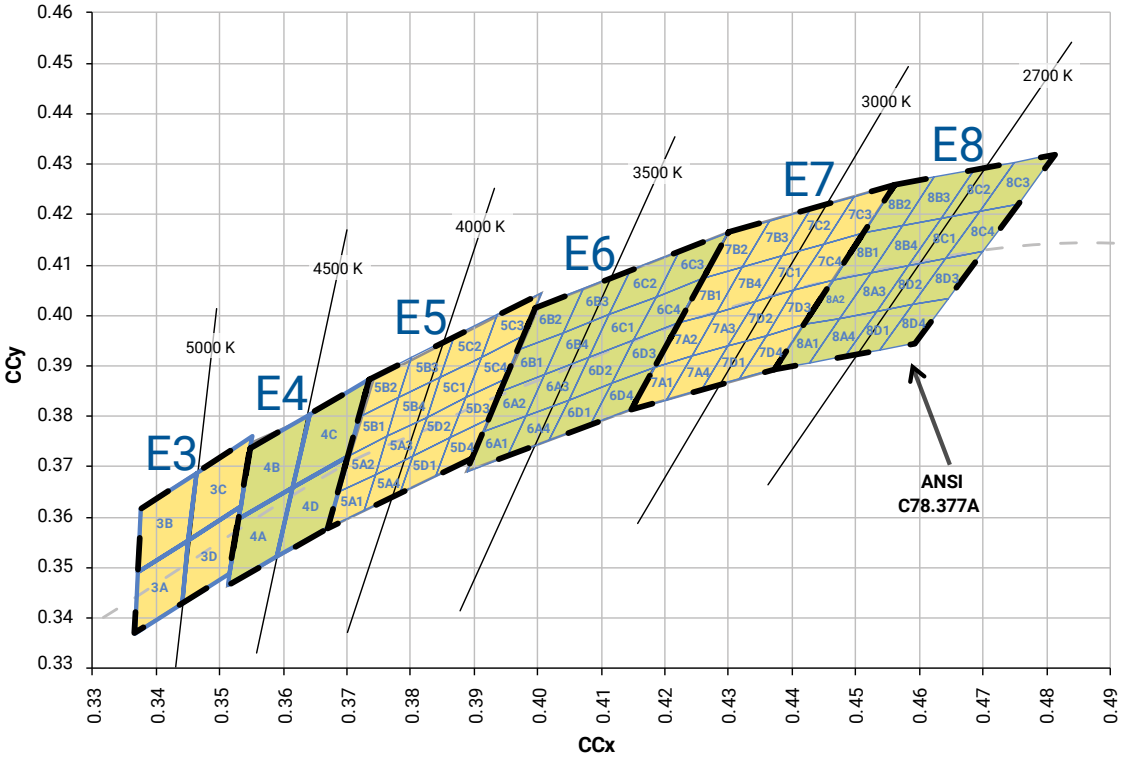

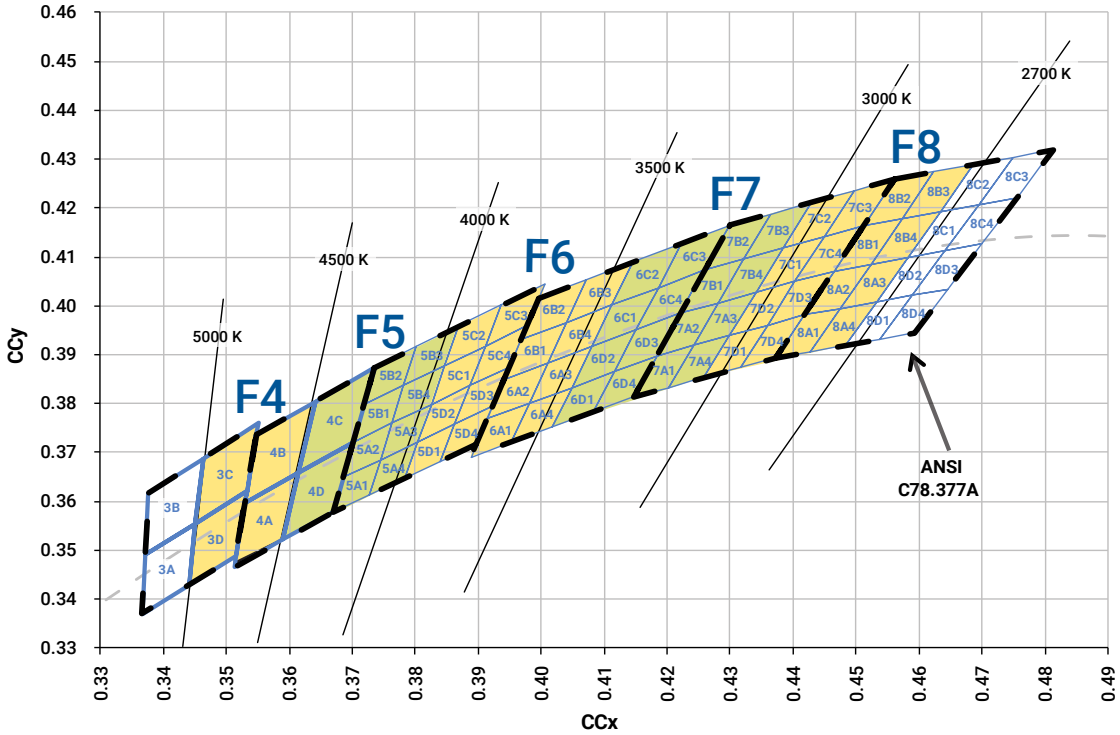

© 2014-2026 Cree LED. The information in this document is subject to change without notice. Cree®, the Cree logo, XLamp®, and the Cree LED logo are registered trademarks of Cree LED. UL® and the UL logo are registered trademarks of UL LLC. Other trademarks, product, and company names are the property of their respective owners and do not imply specific product and/or vendor endorsement, sponsorship or association.

Downloaded from Arrow.com.

STANDARD WARM AND NEUTRAL WHITE KITS PLOTTED ON ANSI STANDARD CHROMATICITY REGIONS - CONTINUED

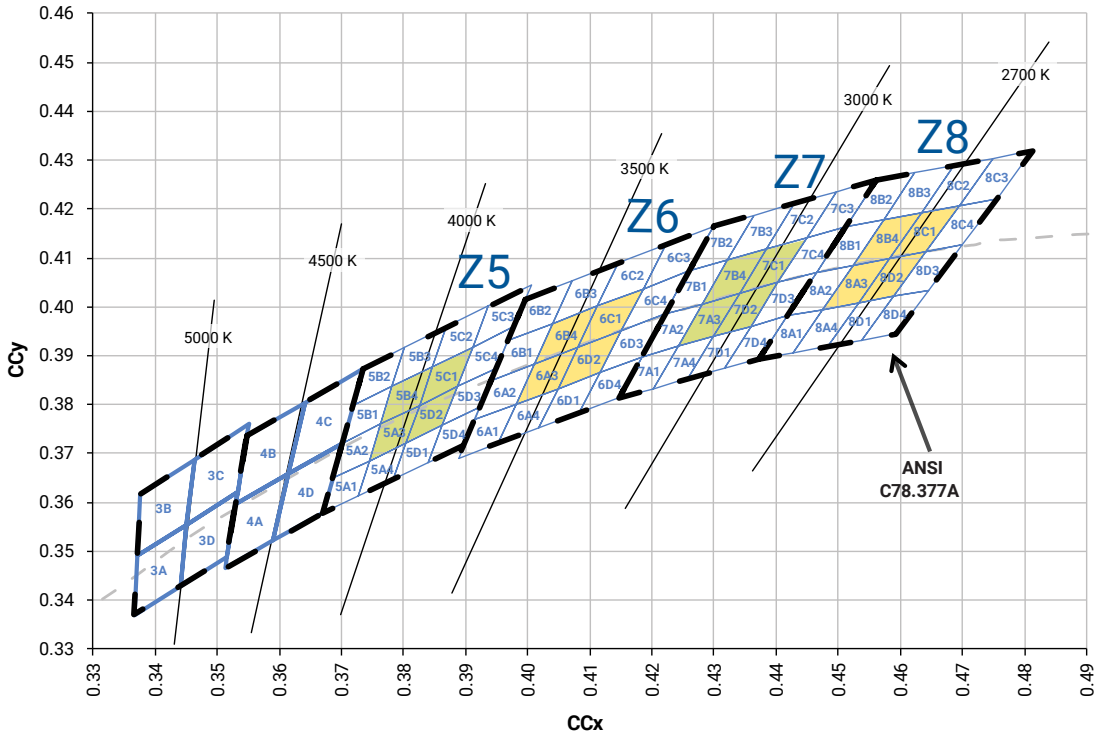

© 2014-2026 Cree LED. The information in this document is subject to change without notice. Cree®, the Cree logo, XLamp®, and the Cree LED logo are registered trademarks of Cree LED. UL® and the UL logo are registered trademarks of UL LLC. Other trademarks, product, and company names are the property of their respective owners and do not imply specific product and/or vendor endorsement, sponsorship or association.

Downloaded from Arrow.com.

STANDARD CHROMATICITY KITS

The following table provides the chromaticity bins associated with chromaticity kits.

Color	CCT	Kit	Chromaticity Bins
Cool White	6200 K	51	0A, 0B, 0C, 0D, 0R, 0S, 0T, 0U, 1A, 1B, 1C, 1D, 1R, 1S, 1T, 1U, 2A, 2B, 2C, 2D, 2R, 2S, 2T, 2U, 3A, 3B, 3R, 3S
	6000 K	53	1A, 1B, 1C, 1D, 1R, 1S, 1T, 1U, 2A, 2B, 2C, 2D, 2R, 2S, 2T, 3A, 3B, 3S
	6200 K	50	1A, 1B, 1C, 1D, 2A, 2B, 2C, 2D
	6500 K	E1	1A, 1B, 1C, 1D
	5700 K	E2	2A, 2B, 2C, 2D
Neutral White	5000 K	E3	3A, 3B, 3C, 3D
	4750 K	F4	3C, 3D, 4A, 4B
	4500 K	E4	4A, 4B, 4C, 4D
	4250 K	F5	4C, 4D, 5A1, 5A2, 5A3, 5A4, 5B1, 5B2, 5B3, 5B4
	4000 K	E5	5A1, 5A2, 5A3, 5A4, 5B1, 5B2, 5B3, 5B4, 5C1, 5C2, 5C3, 5C4, 5D1, 5D2, 5D3, 5D4
	4000 K	Z5	5A3, 5B4, 5C1, 5D2
	3750 K	F6	5C1, 5C2, 5C3, 5C4, 5D1, 5D2, 5D3, 5D4, 6A1, 6A2, 6A3, 6A4, 6B1, 6B2, 6B3, 6B4
Warm White	3500 K	E6	6A1, 6A2, 6A3, 6A4, 6B1, 6B2, 6B3, 6B4, 6C1, 6C2, 6C3, 6C4, 6D1, 6D2, 6D3, 6D4
	3500 K	Z6	6A3, 6B4, 6C1, 6D2
	3250 K	F7	6C1, 6C2, 6C3, 6C4, 6D1, 6D2, 6D3, 6D4, 7A1, 7A2, 7A3, 7A4, 7B1, 7B2, 7B3, 7B4
	3000 K	E7	7A1, 7A2, 7A3, 7A4, 7B1, 7B2, 7B3, 7B4, 7C1, 7C2, 7C3, 7C4, 7D1, 7D2, 7D3, 7D4
	3000 K	Z7	7A3, 7B4, 7C1, 7D2
	2850 K	F8	7C1, 7C2, 7C3, 7C4, 7D1, 7D2, 7D3, 7D4, 8A1, 8A2, 8A3, 8A4, 8B1, 8B2, 8B3, 8B4
	2700 K	E8	8A1, 8A2, 8A3, 8A4, 8B1, 8B2, 8B3, 8B4, 8C1, 8C2, 8C3, 8C4, 8D1, 8D2, 8D3, 8D4
	2700 K	Z8	8A3, 8B4, 8C1, 8D2

© 2014-2026 Cree LED. The information in this document is subject to change without notice. Cree®, the Cree logo, XLamp®, and the Cree LED logo are registered trademarks of Cree LED. UL® and the UL logo are registered trademarks of UL LLC. Other trademarks, product, and company names are the property of their respective owners and do not imply specific product and/or vendor endorsement, sponsorship or association.

Downloaded from Arrow.com.

BIN AND ORDER CODE FORMATS

XP-L bin codes and order codes are configured in the following manner:

Order Code

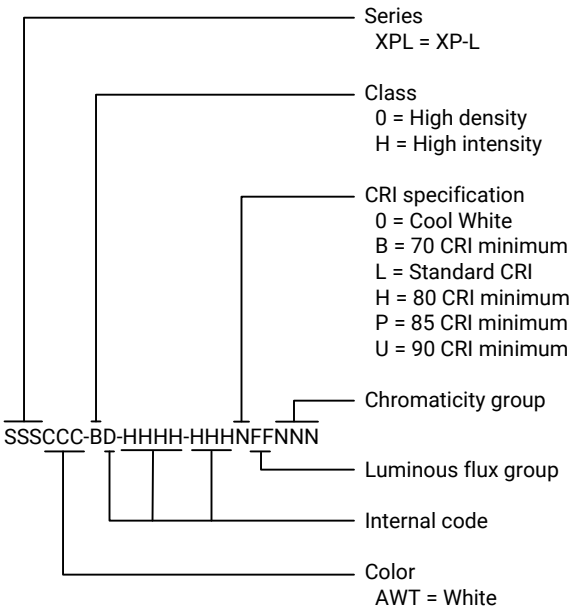

Bin Code

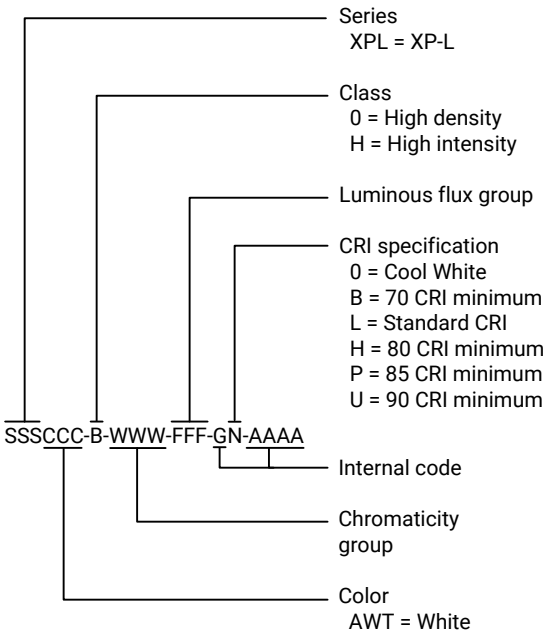

© 2014-2026 Cree LED. The information in this document is subject to change without notice. Cree®, the Cree logo, XLamp®, and the Cree LED logo are registered trademarks of Cree LED. UL® and the UL logo are registered trademarks of UL LLC. Other trademarks, product, and company names are the property of their respective owners and do not imply specific product and/or vendor endorsement, sponsorship or association.

Downloaded from Arrow.com.

REFLOW SOLDERING CHARACTERISTICS

In testing, Cree LED has found XLamp XP-L LEDs to be compatible with JEDEC J-STD-020C, using the parameters listed below. As a general guideline, Cree LED recommends that users follow the recommended soldering profile provided by the manufacturer of the solder paste used, and therefore it is the lamp or luminaire manufacturer's responsibility to determine applicable soldering requirements.

Note that this general guideline may not apply to all PCB designs and configurations of reflow soldering equipment.

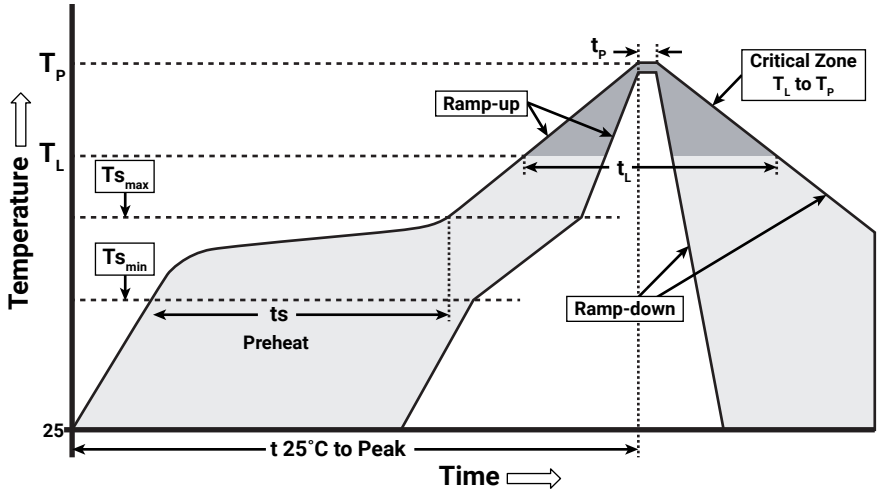

IPC/JEDEC J-STD-020C

Profile Feature	Lead-Free Solder
Average Ramp-Up Rate (Ts_{max} to Tp)	1.2 °C/second
Preheat: Temperature Min (Ts_{min})	120 °C
Preheat: Temperature Max (Ts_{max})	170 °C
Preheat: Time (ts_{min} to ts_{max})	65-150 seconds
Time Maintained Above: Temperature (T_L)	217 °C
Time Maintained Above: Time (t_L)	45-90 seconds
Peak/Classification Temperature (Tp)	235 - 245 °C
Time Within 5 °C of Actual Peak Temperature (tp)	20-40 seconds
Ramp-Down Rate	1 - 6 °C/second
Time 25 °C to Peak Temperature	4 minutes max.

Note: All temperatures refer to the topside of the package, measured on the package body surface.

© 2014-2026 Cree LED. The information in this document is subject to change without notice. Cree®, the Cree logo, XLamp®, and the Cree LED logo are registered trademarks of Cree LED. UL® and the UL logo are registered trademarks of UL LLC. Other trademarks, product, and company names are the property of their respective owners and do not imply specific product and/or vendor endorsement, sponsorship or association.

Downloaded from Arrow.com.

NOTES

Measurements

The luminous flux, radiant power, chromaticity, forward voltage and CRI measurements in this document are binning specifications only and solely represent product measurements as of the date of shipment. These measurements will change over time based on a number of factors that are not within Cree LED's control and are not intended or provided as operational specifications for the products. Calculated values are provided for informational purposes only and are not intended or provided as specifications.

Pre-Release Qualification Testing

Please read the LED Reliability Overview for details of the qualification process Cree LED applies to ensure long-term reliability for XLamp LEDs and details of Cree LED's pre-release qualification testing for XLamp LEDs.

Lumen Maintenance

Cree LED now uses standardized IES LM-80-08 and TM-21-11 methods for collecting long-term data and extrapolating LED lumen maintenance. For information on the specific LM-80 data sets available for this LED, refer to the public LM-80 results document.

Please read the Long-Term Lumen Maintenance application note for more details on Cree LED's lumen maintenance testing and forecasting. Please read the Thermal Management application note for details on how thermal design, ambient temperature, and drive current affect the LED junction temperature.

Moisture Sensitivity

Cree LED recommends keeping XLamp LEDs in the provided, resealable moisture-barrier packaging (MBP) until immediately prior to soldering. Unopened MBPs that contain XLamp LEDs do not need special storage for moisture sensitivity.

Once the MBP is opened, XLamp XP-L LEDs may be stored as MSL 1 per JEDEC J-STD-033, meaning they have unlimited floor life in conditions of ≤ 30 °C/85% relative humidity (RH). Regardless of the storage condition, Cree LED recommends sealing any unsoldered LEDs in the original MBP.

RoHS Compliance

The levels of RoHS restricted materials in this product are below the maximum concentration values (also referred to as the threshold limits) permitted for such substances, or are used in an exempted application, in accordance with EU Directive 2011/65/EC (RoHS2), as implemented January 2, 2013. RoHS Declarations for this product can be obtained from your Cree LED representative or from the Product Ecology section of the Cree LED website.

REACH Compliance

REACH substances of very high concern (SVHCs) information is available for this product. Since the European Chemical Agency (ECHA) has published notice of their intent to frequently revise the SVHC listing for the foreseeable future, please contact a Cree LED representative to insure you get the most up-to-date REACH Declaration. REACH banned substance information (REACH Article 67) is also available upon request.

© 2014-2026 Cree LED. The information in this document is subject to change without notice. Cree®, the Cree logo, XLamp®, and the Cree LED logo are registered trademarks of Cree LED. UL® and the UL logo are registered trademarks of UL LLC. Other trademarks, product, and company names are the property of their respective owners and do not imply specific product and/or vendor endorsement, sponsorship or association.

Downloaded from Arrow.com.

NOTES - CONTINUED

UL® Recognized Component

This product meets the requirements to be considered a UL Recognized Component with Level 4 enclosure consideration. The LED package or a portion thereof has been investigated as a fire and electrical enclosure per ANSI/UL 8750.

Vision Advisory

WARNING: Do not look at an exposed lamp in operation. Eye injury can result. For more information about LEDs and eye safety, please refer to the LED Eye Safety application note.

© 2014-2026 Cree LED. The information in this document is subject to change without notice. Cree®, the Cree logo, XLamp®, and the Cree LED logo are registered trademarks of Cree LED. UL® and the UL logo are registered trademarks of UL LLC. Other trademarks, product, and company names are the property of their respective owners and do not imply specific product and/or vendor endorsement, sponsorship or association.

Downloaded from Arrow.com.

MECHANICAL DIMENSIONS

All measurements are ±.13 mm unless otherwise indicated.

XP-L High Density

XPLAWT-00-xxxx-xxxxxxxxx

High Density

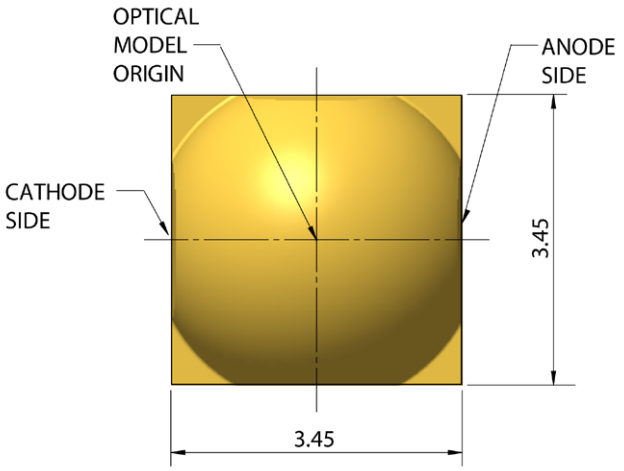

Top View

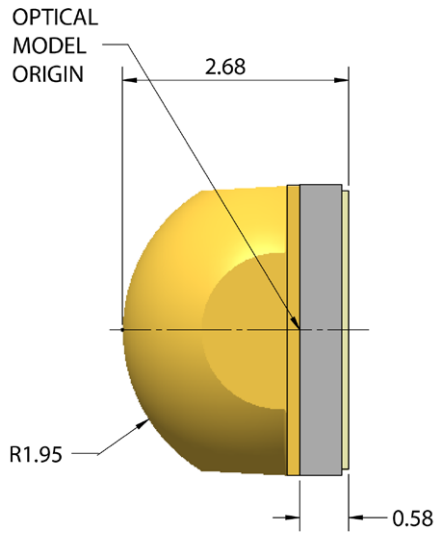

Side View

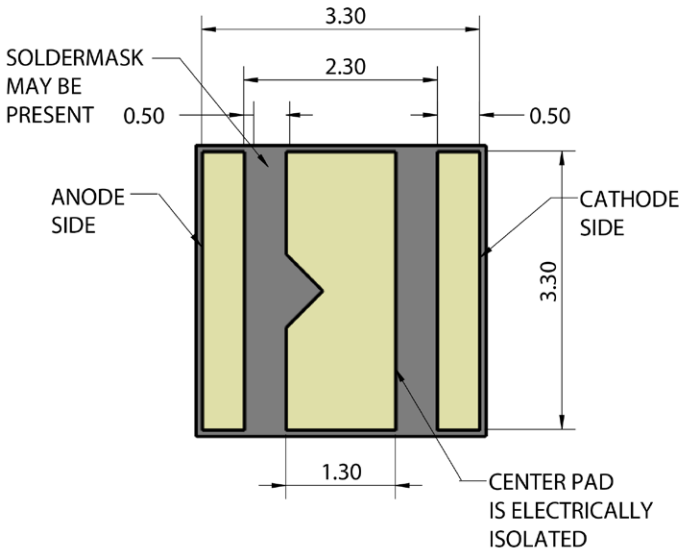

Bottom View

© 2014-2026 Cree LED. The information in this document is subject to change without notice. Cree®, the Cree logo, XLamp®, and the Cree LED logo are registered trademarks of Cree LED. UL® and the UL logo are registered trademarks of UL LLC. Other trademarks, product, and company names are the property of their respective owners and do not imply specific product and/or vendor endorsement, sponsorship or association.

Downloaded from Arrow.com.

MECHANICAL DIMENSIONS - CONTINUED

All measurements are ±.13 mm unless otherwise indicated.

Alternate bottom views of the XP-L High Density LED are shown in the diagrams below.

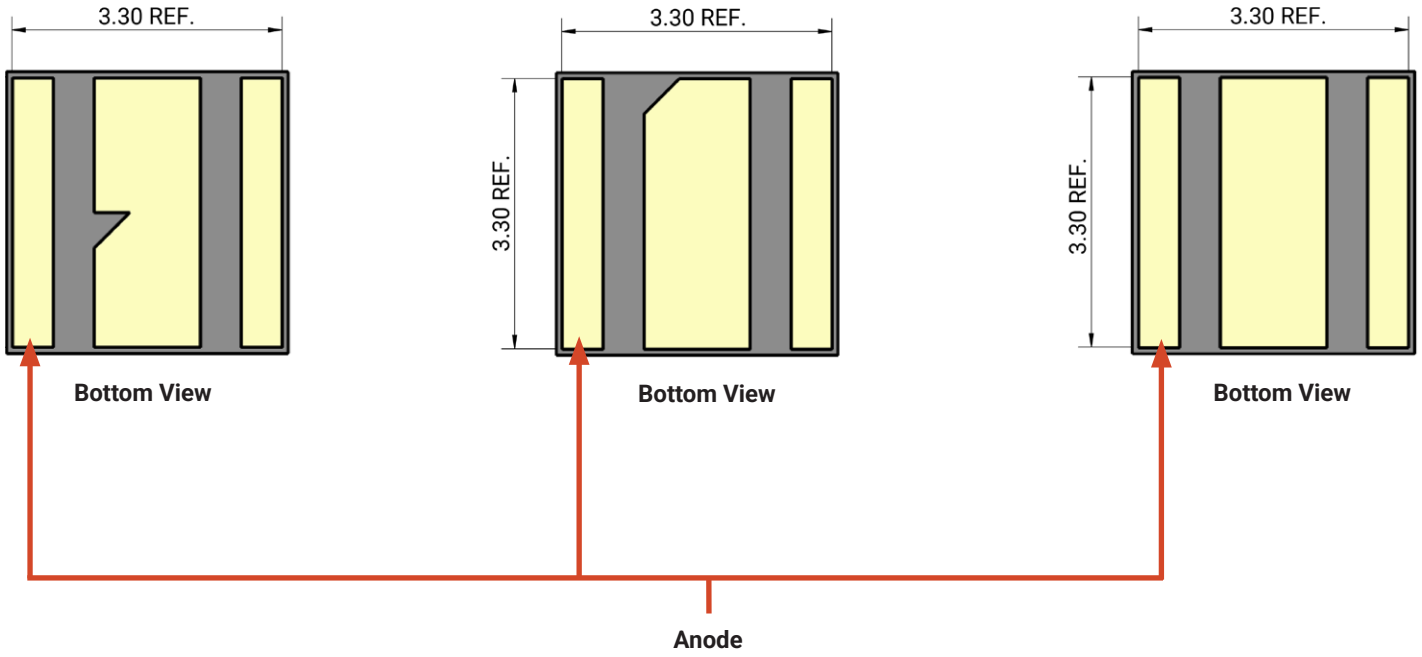

© 2014-2026 Cree LED. The information in this document is subject to change without notice. Cree®, the Cree logo, XLamp®, and the Cree LED logo are registered trademarks of Cree LED. UL® and the UL logo are registered trademarks of UL LLC. Other trademarks, product, and company names are the property of their respective owners and do not imply specific product and/or vendor endorsement, sponsorship or association.

Downloaded from Arrow.com.

MECHANICAL DIMENSIONS - CONTINUED

XP-L High Intensity

XPLAWT-H0-xxxx-xxxxxxxxx

High Intensity

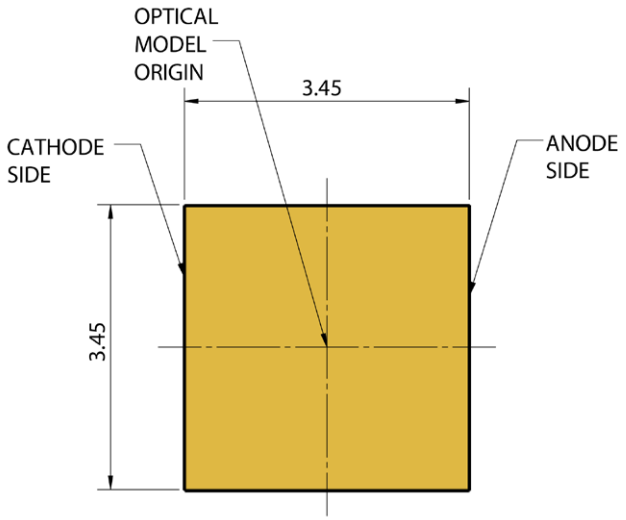

Top View

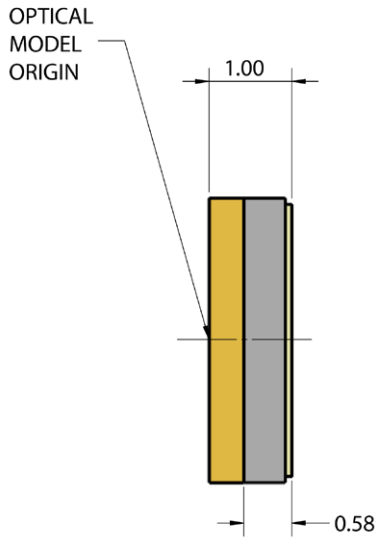

Side View

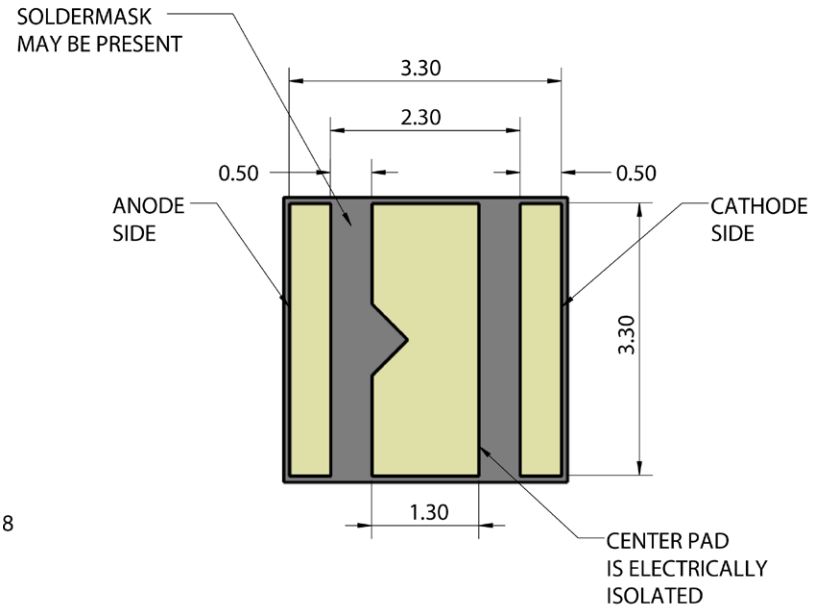

8

Bottom View

© 2014-2026 Cree LED. The information in this document is subject to change without notice. Cree®, the Cree logo, XLamp®, and the Cree LED logo are registered trademarks of Cree LED. UL® and the UL logo are registered trademarks of UL LLC. Other trademarks, product, and company names are the property of their respective owners and do not imply specific product and/or vendor endorsement, sponsorship or association.

Downloaded from Arrow.com.

MECHANICAL DIMENSIONS - CONTINUED

XP-L High Density & High Intensity

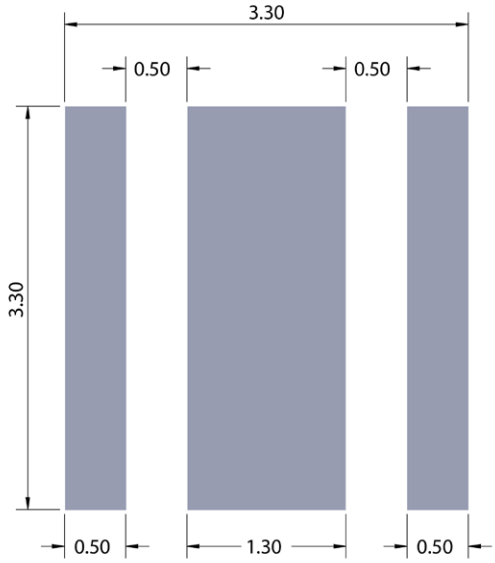

Recommended PCB Footprint

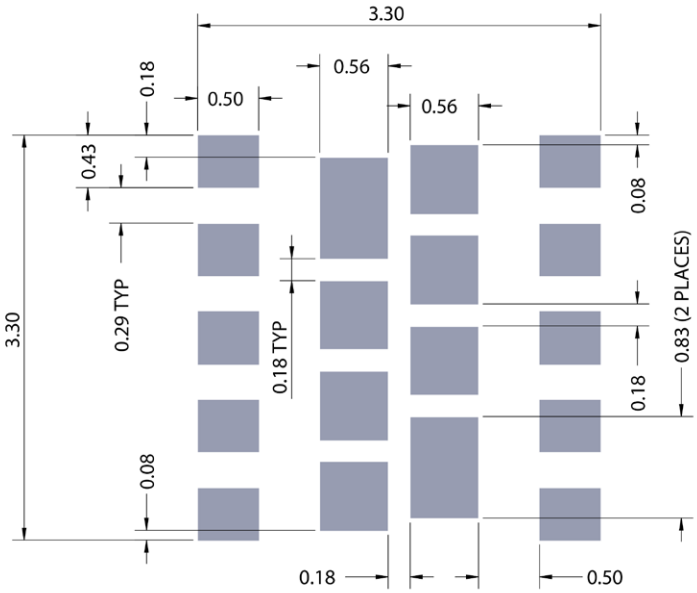

Recommended Stencil Opening*

Notes:

- Cree LED recommends using thermal pad kickouts to maximize component thermal performance.
- Cree LED recommends using white solder mask material to minimize system optical loss.

* This stencil has been tested and optimized for the avoidance of voiding when using ALPHA® OM-362 solder paste. For other solder pastes, a “window pane” design for the thermal pad stencil may result in a lower voiding percentage. Contact your local Cree LED representative for consultation regarding your specific application.

© 2014-2026 Cree LED. The information in this document is subject to change without notice. Cree®, the Cree logo, XLamp®, and the Cree LED logo are registered trademarks of Cree LED. UL® and the UL logo are registered trademarks of UL LLC. Other trademarks, product, and company names are the property of their respective owners and do not imply specific product and/or vendor endorsement, sponsorship or association.

Downloaded from Arrow.com.

TAPE AND REEL

All Cree LED carrier tapes conform to EIA-481D, Automated Component Handling Systems Standard.

Except as noted, all dimensions in mm.

All measurements are ±0.15 mm unless otherwise indicated.

XP-L High Density

XPLAWT-00-xxxx-xxxxxxxxx

High Density

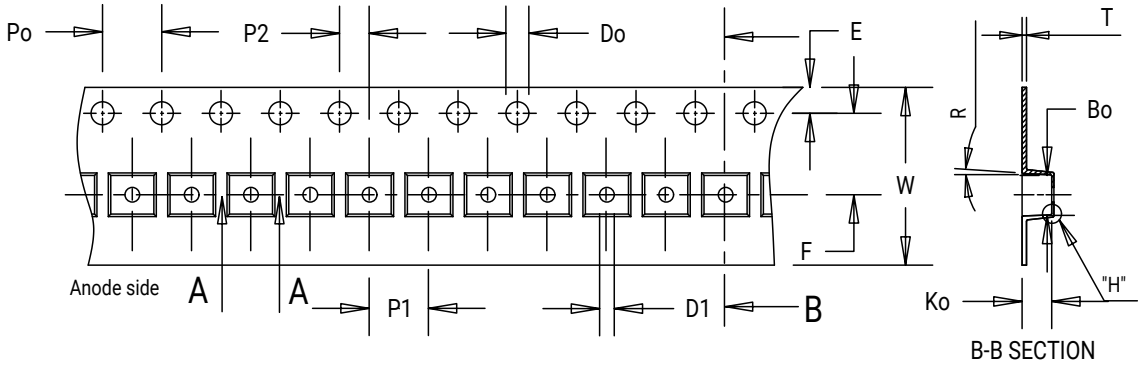

B-B SECTION

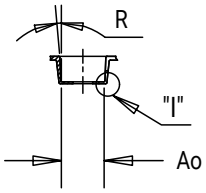

A-A SECTION

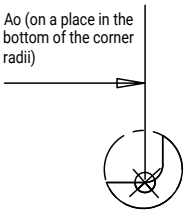

DETAIL"I"

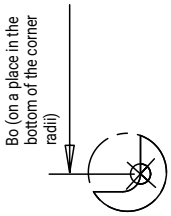

DETAIL"H"

Anode Side

Item	Ao	Bo	Ko	Po	P1	P2	T	E	F	Do	D1	W	R
Dimension	3.75	3.75	2.90	4.00	8.00	2.00	0.30	1.75	5.50	1.50	1.50	12.00	3°

© 2014-2026 Cree LED. The information in this document is subject to change without notice. Cree®, the Cree logo, XLamp®, and the Cree LED logo are registered trademarks of Cree LED. UL® and the UL logo are registered trademarks of UL LLC. Other trademarks, product, and company names are the property of their respective owners and do not imply specific product and/or vendor endorsement, sponsorship or association.

Downloaded from Arrow.com.

TAPE AND REEL - CONTINUED

XP-L High Density

XPLAWT-00-xxxx-xxxxxxxxx

High Density

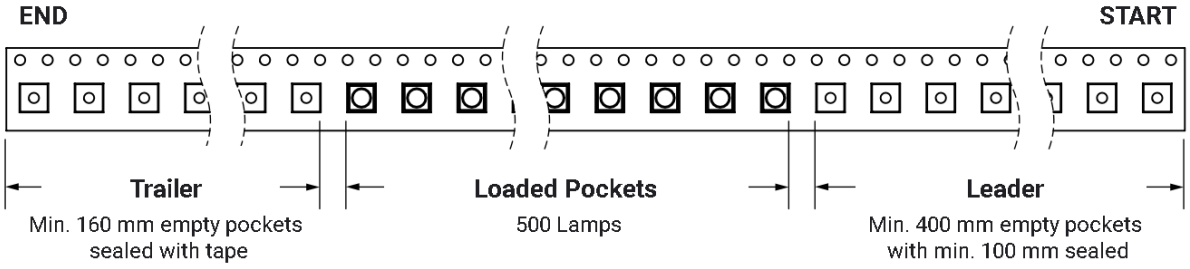

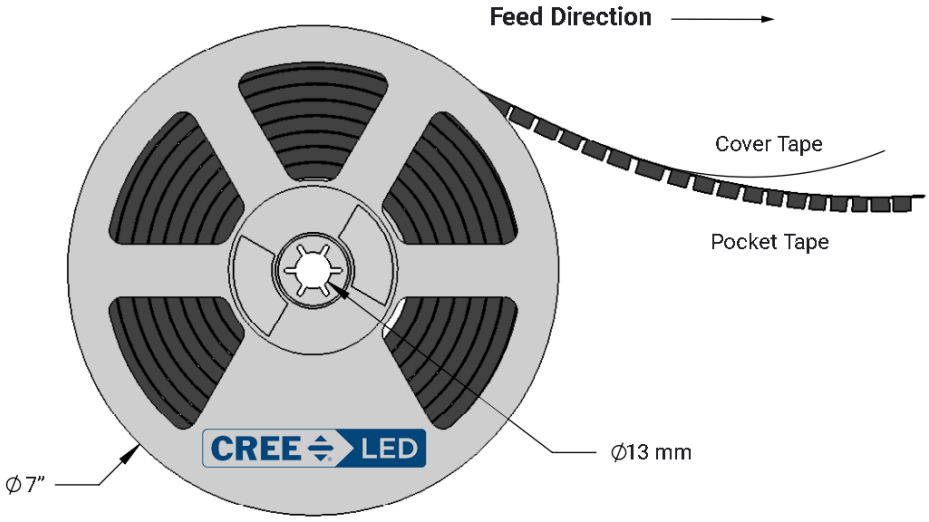

© 2014-2026 Cree LED. The information in this document is subject to change without notice. Cree®, the Cree logo, XLamp®, and the Cree LED logo are registered trademarks of Cree LED. UL® and the UL logo are registered trademarks of UL LLC. Other trademarks, product, and company names are the property of their respective owners and do not imply specific product and/or vendor endorsement, sponsorship or association.

Downloaded from Arrow.com.

TAPE AND REEL - CONTINUED

All Cree LED carrier tapes conform to EIA-481D, Automated Component Handling Systems Standard.

Except as noted, all dimensions in mm.

All measurements are ±0.10 mm unless otherwise indicated.

XP-L High Intensity

XPLAWT-H0-xxxx-xxxxxxxxx

High Intensity

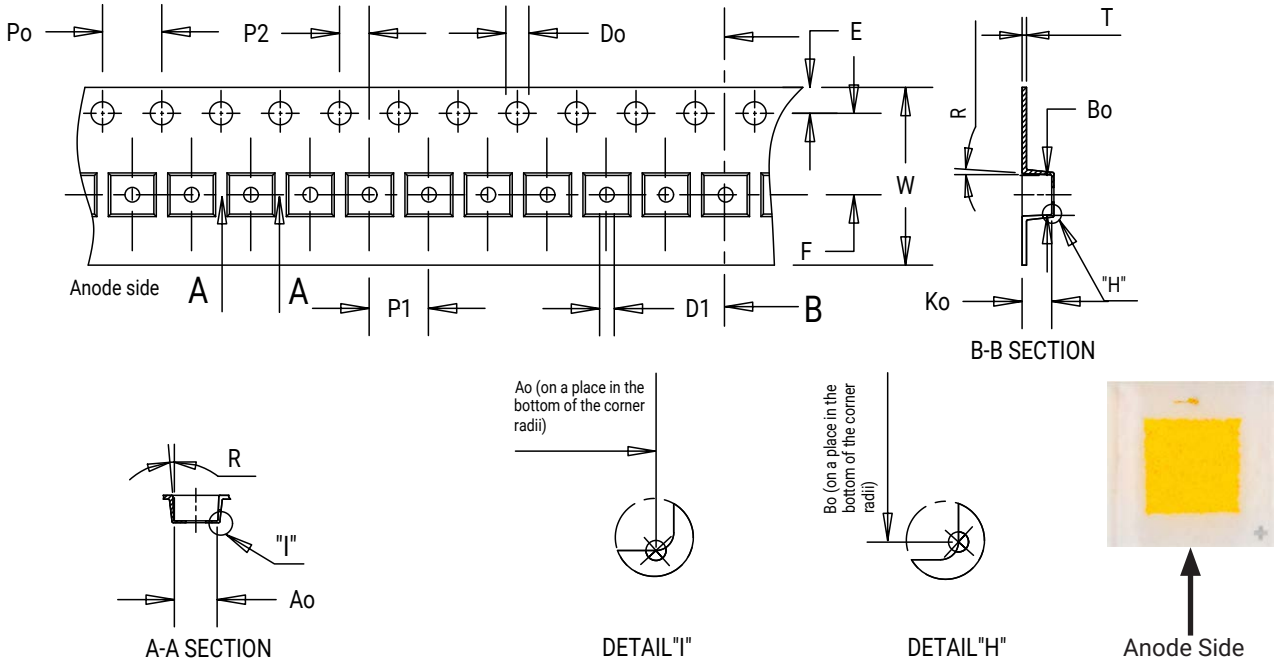

Item	Ao	Bo	Ko	P0	P1	P2	T	E	F	D0	D1	W
Dimension	3.70	3.70	1.20	4.00	8.00	2.00	0.30±0.05	1.75	5.50	1.50+0.10/-0	1.50 min.	12.00+0.20/-0.1

© 2014-2026 Cree LED. The information in this document is subject to change without notice. Cree®, the Cree logo, XLamp®, and the Cree LED logo are registered trademarks of Cree LED. UL® and the UL logo are registered trademarks of UL LLC. Other trademarks, product, and company names are the property of their respective owners and do not imply specific product and/or vendor endorsement, sponsorship or association.

Downloaded from Arrow.com.

TAPE AND REEL - CONTINUED

XP-L High Intensity

XPLAWT-H0-xxxx-xxxxxxxxx

High Intensity

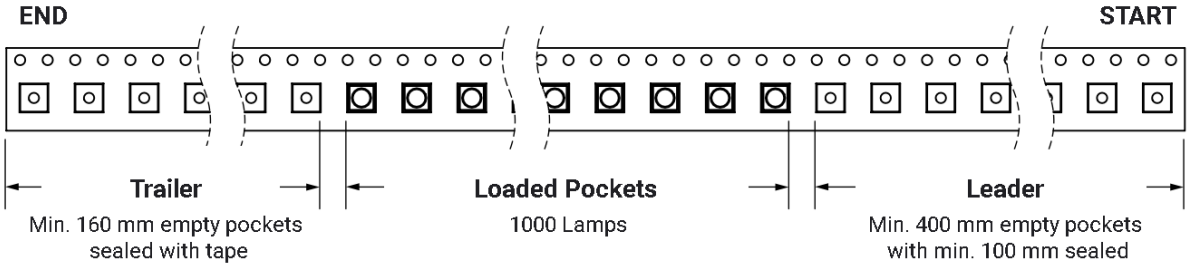

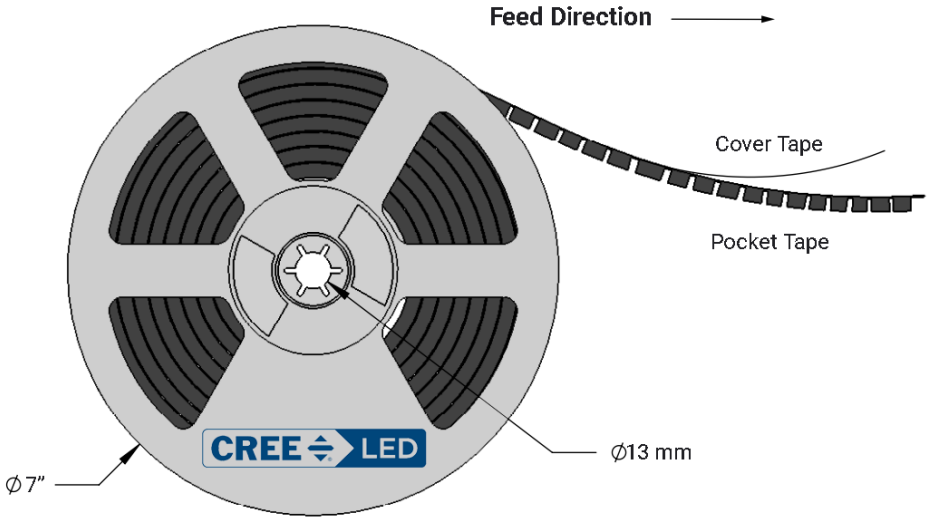

© 2014-2026 Cree LED. The information in this document is subject to change without notice. Cree®, the Cree logo, XLamp®, and the Cree LED logo are registered trademarks of Cree LED. UL® and the UL logo are registered trademarks of UL LLC. Other trademarks, product, and company names are the property of their respective owners and do not imply specific product and/or vendor endorsement, sponsorship or association.

Downloaded from Arrow.com.

PACKAGING

Unpackaged Reel

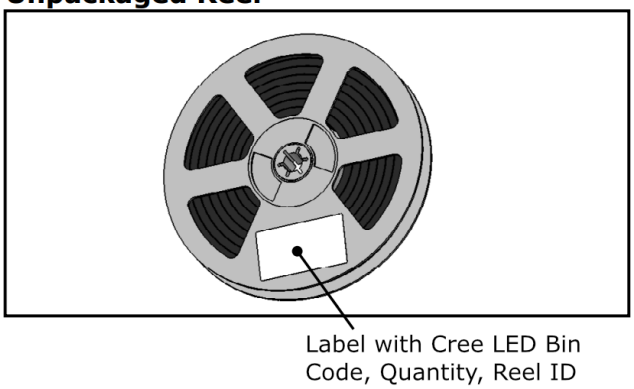

Packaged Reel

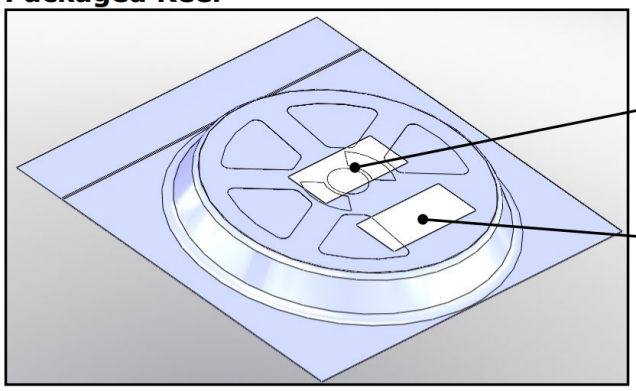

Boxed Reel

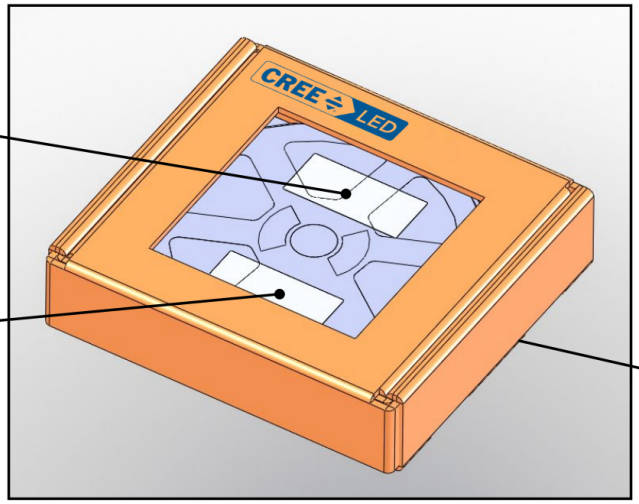

© 2014-2026 Cree LED. The information in this document is subject to change without notice. Cree®, the Cree logo, XLamp®, and the Cree LED logo are registered trademarks of Cree LED. UL® and the UL logo are registered trademarks of UL LLC. Other trademarks, product, and company names are the property of their respective owners and do not imply specific product and/or vendor endorsement, sponsorship or association.

Downloaded from Arrow.com.

APPENDIX - ORDER CODES NOT FOR NEW DESIGNS

The following order codes are active and valid order codes, but higher performance options are also available. Please see page 3 for order codes of XLamp XP-L High Density LEDs that could serve as alternatives for the order codes set forth below.

XP-L High Density, T_J = 85 °C

Chromaticity		Minimum Luminous Flux (lm) @ 1050 mA		Order Codes	
Kit	CCT	Code	Flux (lm)	65 CRI Typical	70 CRI Minimum
51	6200 K	V4	440	XPLAWT-00-0000-0000V4051	XPLAWT-00-0000-000BV4051
		V3	420	XPLAWT-00-0000-0000V3051	XPLAWT-00-0000-000BV3051
		V2	400		XPLAWT-00-0000-000BV2051
53	6000 K	V4	440	XPLAWT-00-0000-0000V4053	XPLAWT-00-0000-000BV4053
		V3	420	XPLAWT-00-0000-0000V3053	XPLAWT-00-0000-000BV3053
		V2	400		XPLAWT-00-0000-000BV2053
50	6200 K	V4	440	XPLAWT-00-0000-0000V4050	XPLAWT-00-0000-000BV4050
		V3	420	XPLAWT-00-0000-0000V3050	XPLAWT-00-0000-000BV3050
		V2	400		XPLAWT-00-0000-000BV2050
E1	6500 K	V4	440	XPLAWT-00-0000-0000V40E1	XPLAWT-00-0000-000BV40E1
		V3	420	XPLAWT-00-0000-0000V30E1	XPLAWT-00-0000-000BV30E1
		V2	400		XPLAWT-00-0000-000BV20E1
E2	5700 K	V4	440	XPLAWT-00-0000-0000V40E2	XPLAWT-00-0000-000BV40E2
		V3	420	XPLAWT-00-0000-0000V30E2	XPLAWT-00-0000-000BV30E2
		V2	400		XPLAWT-00-0000-000BV20E2

Note

- Cree LED maintains a tolerance of ±7% on flux and power measurements, ±0.005 on chromaticity (CCx, CCy) measurements and a tolerance of ±2 on CRI measurements. See the Measurements section (page 26).

© 2014-2026 Cree LED. The information in this document is subject to change without notice. Cree®, the Cree logo, XLamp®, and the Cree LED logo are registered trademarks of Cree LED. UL® and the UL logo are registered trademarks of UL LLC. Other trademarks, product, and company names are the property of their respective owners and do not imply specific product and/or vendor endorsement, sponsorship or association.

Downloaded from Arrow.com.

APPENDIX - ORDER CODES NOT FOR NEW DESIGNS - CONTINUED

The following order codes are active and valid order codes, but higher performance options are also available. Please see page 4 and page 5 for order codes of XLamp XP-L High Density LEDs that could serve as alternatives for the order codes set forth below.

Chromaticity		Minimum Luminous Flux (lm) @ 1050 mA		Order Codes		
Kit	CCT	Code	Flux (lm)	70 CRI Minimum	75 CRI Typical	80 CRI Minimum
E3	5000 K	V4	440	XPLAWT-00-0000-000BV40E3		
		V3	420	XPLAWT-00-0000-000BV30E3		
		V2	400	XPLAWT-00-0000-000BV20E3		
F4	4750 K	V4	440	XPLAWT-00-0000-000BV40F4		
		V3	420	XPLAWT-00-0000-000BV30F4		
		V2	400	XPLAWT-00-0000-000BV20F4		
E4	4500 K	V4	440	XPLAWT-00-0000-000BV40E4		
		V3	420	XPLAWT-00-0000-000BV30E4		
		V2	400	XPLAWT-00-0000-000BV20E4		
F5	4250 K	V4	440	XPLAWT-00-0000-000BV40F5		
		V3	420	XPLAWT-00-0000-000BV30F5		
		V2	400	XPLAWT-00-0000-000BV20F5		
E5	4000 K	V4	440	XPLAWT-00-0000-000BV40E5		
		V3	420	XPLAWT-00-0000-000BV30E5		
		V2	400	XPLAWT-00-0000-000BV20E5		XPLAWT-00-0000-000HV20E5
		U6	380	XPLAWT-00-0000-000BU60E5	XPLAWT-00-0000-000LU60E5	XPLAWT-00-0000-000HU60E5
		U5	360			XPLAWT-00-0000-000HU50E5
Z5	4000 K	V3	420	XPLAWT-00-0000-000BV30Z5		
		V2	400	XPLAWT-00-0000-000BV20Z5		XPLAWT-00-0000-000HV20Z5
		U6	380	XPLAWT-00-0000-000BU60Z5	XPLAWT-00-0000-000LU60Z5	XPLAWT-00-0000-000HU60Z5
		U5	360			XPLAWT-00-0000-000HU50Z5
F6	3700 K	V2	400			XPLAWT-00-0000-000HV20F6
		U6	380		XPLAWT-00-0000-000LU60F6	XPLAWT-00-0000-000HU60F6
		U5	360		XPLAWT-00-0000-000LU50F6	XPLAWT-00-0000-000HU50F6

Note

- Cree LED maintains a tolerance of ±7% on flux and power measurements, ±0.005 on chromaticity (CCx, CCy) measurements and a tolerance of ±2 on CRI measurements. See the Measurements section (page 26).

© 2014-2026 Cree LED. The information in this document is subject to change without notice. Cree®, the Cree logo, XLamp®, and the Cree LED logo are registered trademarks of Cree LED. UL® and the UL logo are registered trademarks of UL LLC. Other trademarks, product, and company names are the property of their respective owners and do not imply specific product and/or vendor endorsement, sponsorship or association.

Downloaded from Arrow.com.

APPENDIX - ORDER CODES NOT FOR NEW DESIGNS - CONTINUED

The following order codes are active and valid order codes, but higher performance options are also available. Please see page 6 and page 7 for order codes of XLamp XP-L High Density LEDs that could serve as alternatives for the order codes set forth below.

Chromaticity		Minimum Luminous Flux (lm) @ 1050 mA		Order Codes			
Kit	CCT	Code	Flux (lm)	80 CRI Typical	80 CRI Minimum	85 CRI Minimum	90 CRI Minimum
E6	3500 K	V2	400		XPLAWT-00-0000-000HV20E6		
		U6	380	XPLAWT-00-0000-000LU60E6	XPLAWT-00-0000-000HU60E6		
		U5	360	XPLAWT-00-0000-000LU50E6	XPLAWT-00-0000-000HU50E6		
Z6	3500 K	U6	380		XPLAWT-00-0000-000HU60Z6		
		U5	360	XPLAWT-00-0000-000LU50Z6	XPLAWT-00-0000-000HU50Z6		
F7	3250 K	U6	380		XPLAWT-00-0000-000HU60F7		
		U5	360	XPLAWT-00-0000-000LU50F7	XPLAWT-00-0000-000HU50F7		
		U4	340	XPLAWT-00-0000-000LU40F7	XPLAWT-00-0000-000HU40F7		
E7	3000 K	U6	380		XPLAWT-00-0000-000HU60E7		
		U5	360	XPLAWT-00-0000-000LU50E7	XPLAWT-00-0000-000HU50E7		
		U4	340	XPLAWT-00-0000-000LU40E7	XPLAWT-00-0000-000HU40E7		
		U3	320			XPLAWT-00-0000-000PU30E7	
		U2	300			XPLAWT-00-0000-000PU20E7	XPLAWT-00-0000-000UU20E7
		T6	280			XPLAWT-00-0000-000PT60E7	XPLAWT-00-0000-000UT60E7
Z7	3000 K	U5	360		XPLAWT-00-0000-000HU50Z7		
		U4	340	XPLAWT-00-0000-000LU40Z7	XPLAWT-00-0000-000HU40Z7		
		U3	320			XPLAWT-00-0000-000PU30Z7	
		U2	300			XPLAWT-00-0000-000PU20Z7	XPLAWT-00-0000-000UU20Z7
		T6	280			XPLAWT-00-0000-000PT60Z7	XPLAWT-00-0000-000UT60Z7
F8	2850 K	U5	360		XPLAWT-00-0000-000HU50F8		
		U4	340	XPLAWT-00-0000-000LU40F8	XPLAWT-00-0000-000HU40F8		
		U3	320			XPLAWT-00-0000-000PU30F8	
		U2	300			XPLAWT-00-0000-000PU20F8	XPLAWT-00-0000-000UU20F8
		T6	280			XPLAWT-00-0000-000PT60F8	XPLAWT-00-0000-000UT60F8
		T5	260			XPLAWT-00-0000-000PT50F8	XPLAWT-00-0000-000UT50F8
E8	2700 K	U5	360		XPLAWT-00-0000-000HU50E8		
		U4	340	XPLAWT-00-0000-000LU40E8	XPLAWT-00-0000-000HU40E8		
		U3	320			XPLAWT-00-0000-000PU30E8	
		U2	300			XPLAWT-00-0000-000PU20E8	
		T6	280			XPLAWT-00-0000-000PT60E8	XPLAWT-00-0000-000UT60E8
		T5	260			XPLAWT-00-0000-000PT50E8	XPLAWT-00-0000-000UT50E8

Note

- Cree LED maintains a tolerance of ±7% on flux and power measurements, ±0.005 on chromaticity (CCx, CCy) measurements and a tolerance of ±2 on CRI measurements. See the Measurements section (page 26).

© 2014-2026 Cree LED. The information in this document is subject to change without notice. Cree®, the Cree logo, XLamp®, and the Cree LED logo are registered trademarks of Cree LED. UL® and the UL logo are registered trademarks of UL LLC. Other trademarks, product, and company names are the property of their respective owners and do not imply specific product and/or vendor endorsement, sponsorship or association.

Downloaded from Arrow.com.

APPENDIX - ORDER CODES NOT FOR NEW DESIGNS - CONTINUED

Chromaticity		Minimum Luminous Flux (lm) @ 1050 mA		Order Codes			
Kit	CCT	Code	Flux (lm)	80 CRI Typical	80 CRI Minimum	85 CRI Minimum	90 CRI Minimum
Z8	2700 K	U4	340		XPLAWT-00-0000-000HU40Z8		
		U3	320				
		U2	300			XPLAWT-00-0000-000PU20Z8	
		T6	280			XPLAWT-00-0000-000PT60Z8	XPLAWT-00-0000-000UT60Z8
		T5	260			XPLAWT-00-0000-000PT50Z8	XPLAWT-00-0000-000UT50Z8

Note

- Cree LED maintains a tolerance of ±7% on flux and power measurements, ±0.005 on chromaticity (CCx, CCy) measurements and a tolerance of ±2 on CRI measurements. See the Measurements section (page 26).

© 2014-2026 Cree LED. The information in this document is subject to change without notice. Cree®, the Cree logo, XLamp®, and the Cree LED logo are registered trademarks of Cree LED. UL® and the UL logo are registered trademarks of UL LLC. Other trademarks, product, and company names are the property of their respective owners and do not imply specific product and/or vendor endorsement, sponsorship or association.

Downloaded from Arrow.com.

APPENDIX - ORDER CODES NOT FOR NEW DESIGNS - CONTINUED

The following order codes are active and valid order codes, but higher performance options are also available. Please see page 8 for order codes of XLamp XP-L High Intensity LEDs that could serve as alternatives for the order codes set forth below.

XP-L High Intensity, T_J = 85 °C

Chromaticity		Minimum Luminous Flux (lm) @ 1050 mA		Order Codes	
Kit	CCT	Code	Flux (lm)	65 CRI Typical	70 CRI Minimum
51	6200 K	U6	380	XPLAWT-H0-0000-0000U6051	XPLAWT-H0-0000-000BU6051
		U5	360	XPLAWT-H0-0000-0000U5051	XPLAWT-H0-0000-000BU5051
53	6000 K	U6	380	XPLAWT-H0-0000-0000U6053	XPLAWT-H0-0000-000BU6053
		U5	360	XPLAWT-H0-0000-0000U5053	XPLAWT-H0-0000-000BU5053
50	6200 K	U6	380	XPLAWT-H0-0000-0000U6050	XPLAWT-H0-0000-000BU6050
		U5	360	XPLAWT-H0-0000-0000U5050	XPLAWT-H0-0000-000BU5050
E1	6500 K	U6	380	XPLAWT-H0-0000-0000U60E1	XPLAWT-H0-0000-000BU60E1
		U5	360	XPLAWT-H0-0000-0000U50E1	XPLAWT-H0-0000-000BU50E1
E2	5700 K	U6	380	XPLAWT-H0-0000-0000U60E2	XPLAWT-H0-0000-000BU60E2
		U5	360	XPLAWT-H0-0000-0000U50E2	XPLAWT-H0-0000-000BU50E2

Note

- Cree LED maintains a tolerance of ±7% on flux and power measurements, ±0.005 on chromaticity (CCx, CCy) measurements and a tolerance of ±2 on CRI measurements. See the Measurements section (page 26).

© 2014-2026 Cree LED. The information in this document is subject to change without notice. Cree®, the Cree logo, XLamp®, and the Cree LED logo are registered trademarks of Cree LED. UL® and the UL logo are registered trademarks of UL LLC. Other trademarks, product, and company names are the property of their respective owners and do not imply specific product and/or vendor endorsement, sponsorship or association.

Downloaded from Arrow.com.

APPENDIX - ORDER CODES NOT FOR NEW DESIGNS - CONTINUED

The following order codes are active and valid order codes, but higher performance options are also available. Please see page 9 for order codes of XLamp XP-L High Intensity LEDs that could serve as alternatives for the order codes set forth below.

Chromaticity		Minimum Luminous Flux (lm) @ 1050 mA		Order Codes		
Kit	CCT	Code	Flux (lm)	70 CRI Minimum	75 CRI Typical	80 CRI Minimum
E3	5000 K	U6	380	XPLAWT-H0-0000-000BU60E3	XPLAWT-H0-0000-000LU60E3	
		U5	360	XPLAWT-H0-0000-000BU50E3	XPLAWT-H0-0000-000LU50E3	
F4	4750 K	U6	380	XPLAWT-H0-0000-000BU60F4	XPLAWT-H0-0000-000LU60F4	
		U5	360	XPLAWT-H0-0000-000BU50F4	XPLAWT-H0-0000-000LU50F4	
E4	4500 K	U6	380	XPLAWT-H0-0000-000BU60E4	XPLAWT-H0-0000-000LU60E4	
		U5	360	XPLAWT-H0-0000-000BU50E4	XPLAWT-H0-0000-000LU50E4	
F5	4250 K	U6	380	XPLAWT-H0-0000-000BU60F5		
		U5	360	XPLAWT-H0-0000-000BU50F5	XPLAWT-H0-0000-000LU50F5	
E5	4000 K	U6	380	XPLAWT-H0-0000-000BU60E5		
		U5	360	XPLAWT-H0-0000-000BU50E5	XPLAWT-H0-0000-000LU50E5	XPLAWT-H0-0000-000HU50E5
		U4	340	XPLAWT-H0-0000-000BU40E5	XPLAWT-H0-0000-000LU40E5	XPLAWT-H0-0000-000HU40E5
F6	3700 K	U5	360		XPLAWT-H0-0000-000LU50F6	
		U4	340		XPLAWT-H0-0000-000LU40F6	XPLAWT-H0-0000-000HU40F6
		U3	320		XPLAWT-H0-0000-000LU30F6	XPLAWT-H0-0000-000HU30F6

Note

- Cree LED maintains a tolerance of ±7% on flux and power measurements, ±0.005 on chromaticity (CCx, CCy) measurements and a tolerance of ±2 on CRI measurements. See the Measurements section (page 26).

© 2014-2026 Cree LED. The information in this document is subject to change without notice. Cree®, the Cree logo, XLamp®, and the Cree LED logo are registered trademarks of Cree LED. UL® and the UL logo are registered trademarks of UL LLC. Other trademarks, product, and company names are the property of their respective owners and do not imply specific product and/or vendor endorsement, sponsorship or association.

Downloaded from Arrow.com.

APPENDIX - ORDER CODES NOT FOR NEW DESIGNS - CONTINUED

The following order codes are active and valid order codes, but higher performance options are also available. Please see page 10 for order codes of XLamp XP-L High Intensity LEDs that could serve as alternatives for the order codes set forth below.

Chromaticity		Minimum Luminous Flux (lm) @ 1050 mA		Order Codes			
Kit	CCT	Code	Flux (lm)	80 CRI Typical	80 CRI Minimum	85 CRI Minimum	90 CRI Minimum
E6	3500 K	U5	360	XPLAWT-H0-0000-000LU50E6			
		U4	340	XPLAWT-H0-0000-000LU40E6	XPLAWT-H0-0000-000HU40E6		
		U3	320	XPLAWT-H0-0000-000LU30E6	XPLAWT-H0-0000-000HU30E6		
F7	3250 K	U4	340	XPLAWT-H0-0000-000LU40F7	XPLAWT-H0-0000-000HU40F7		
		U3	320	XPLAWT-H0-0000-000LU30F7	XPLAWT-H0-0000-000HU30F7		
		U2	300	XPLAWT-H0-0000-000LU20F7	XPLAWT-H0-0000-000HU20F7		
E7	3000 K	U4	340	XPLAWT-H0-0000-000LU40E7	XPLAWT-H0-0000-000HU40E7		
		U3	320	XPLAWT-H0-0000-000LU30E7	XPLAWT-H0-0000-000HU30E7		
		U2	300	XPLAWT-H0-0000-000LU20E7	XPLAWT-H0-0000-000HU20E7		
		T6	280			XPLAWT-H0-0000-000PT60E7	
		T5	260			XPLAWT-H0-0000-000PT50E7	XPLAWT-H0-0000-000UT50E7
		T4	240			XPLAWT-H0-0000-000PT40E7	XPLAWT-H0-0000-000UT40E7
F8	2850 K	U4	340	XPLAWT-H0-0000-000LU40F8			
		U3	320	XPLAWT-H0-0000-000LU30F8	XPLAWT-H0-0000-000HU30F8		
		U2	300	XPLAWT-H0-0000-000LU20F8	XPLAWT-H0-0000-000HU20F8		
		T6	280			XPLAWT-H0-0000-000PT60F8	
		T5	260			XPLAWT-H0-0000-000PT50F8	
		T4	240			XPLAWT-H0-0000-000PT40F8	XPLAWT-H0-0000-000UT40F8
		T3	220			XPLAWT-H0-0000-000PT30F8	
E8	2700 K	U4	340	XPLAWT-H0-0000-000LU40E8			
		U3	320	XPLAWT-H0-0000-000LU30E8	XPLAWT-H0-0000-000HU30E8		
		U2	300	XPLAWT-H0-0000-000LU20E8	XPLAWT-H0-0000-000HU20E8		
		T6	280			XPLAWT-H0-0000-000PT60E8	
		T5	260			XPLAWT-H0-0000-000PT50E8	
		T4	240			XPLAWT-H0-0000-000PT40E8	XPLAWT-H0-0000-000UT40E8
		T3	220			XPLAWT-H0-0000-000PT30E8	

Note

- Cree LED maintains a tolerance of ±7% on flux and power measurements, ±0.005 on chromaticity (CCx, CCy) measurements and a tolerance of ±2 on CRI measurements. See the Measurements section (page 26).

© 2014-2026 Cree LED. The information in this document is subject to change without notice. Cree®, the Cree logo, XLamp®, and the Cree LED logo are registered trademarks of Cree LED. UL® and the UL logo are registered trademarks of UL LLC. Other trademarks, product, and company names are the property of their respective owners and do not imply specific product and/or vendor endorsement, sponsorship or association.

Downloaded from Arrow.com.