

Metal-Shell Micro Circular Connectors with Spring Loaded Contacts

Description
- Small, rugged, threaded circular connector for Military and Aerospace, and Industrial applications
- 2 shell sizes M11 (7 pos.) and M14 (19 pos.)

Applications
- Military & Aerospace
- Instrumentation & Test Equipment
- Portable Computing, Data Management, Communications and Sensing Devices
- Rugged Solution for Gigabit Ethernet or High Speed USB 2.0
- Outdoor Applications

Key Features
- High cycle life spring probe and pad contact interface
- Threaded coupling mechanism
- High density for limited space applications
- Jam nut style, rear panel mounting
- Precision, screw machine contacts
- Environmental compression seal (IP67) and shielded
- High performance at lower cost
- Alternate pin and socket contact interface available
- Matte black, low reflectivity finish
- Optimized wiring pattern of standard connector configuration - 8 position Ethernet - exceeds TIA/EIA-568-B.2 standard for Category 5
- Single piece adapter for shield termination and overmolding
- Dual key polarization option
- Selective contact loading options (M11 shell: 2 to 7 pos; M14 shell: 8 to 19 pos)

Mechanical
- Threaded coupling
- 2500 minimum mating cycles with spring probe contacts; 500 cycles with pin contacts
- Environmentally sealed, IP 67 - water immersion, 1M for 30 minutes (in mated condition)
- Overmold or heat-shrink tubing for sealing and strain relieving
- Wire Size: 30-24 AWG [0.06-0.2 mm^2] (24 AWG wire is solid or 7-strand only)
- Termination: Solder
- Max. Operating Temperature: -55˚C to +150˚C

Standards
- Design Objectives: 108-2169, 108-2169-1
- Spring Probe Product Specification: 108-1943
- Qualification Report: 501-664, 501-664-1
- Application Specification: 114-13201

Tyco Electronics

Our commitment. Your advantage.

Downloaded from Arrow.com.

Materials

- **Spring Probe Pin**: Brass, 10 µin. [.25 µm] gold finish over nickel on mating end, tin-lead over nickel on solder cup/tail
- **Spring Probe Pad**: Brass, 30 µin. [.76 µm] gold finish over nickel on entire contact
- **Shell**: Black chrome plated (Nickel plated brass option)
- **Insulator**: High temperature thermoplastic, white

Electrical

- Operating Voltage: 200 VAC max.
- Termination Resistance: 30 mOhm max.
- Current Carrying Capacity: 2 amp, signal only

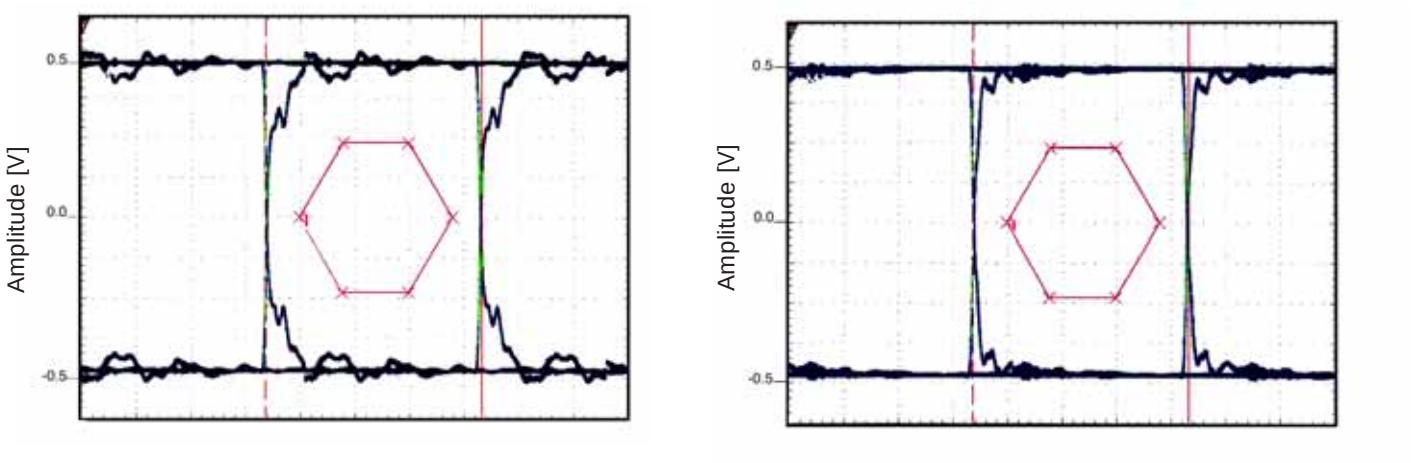

Eye Pattern Mask Created per USB 2.0 Specification
480 Mb/s Data Rate (Refer to 502-1176)

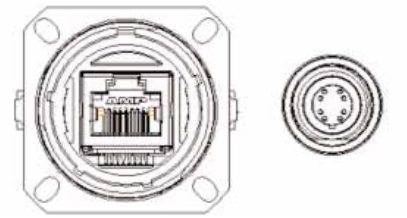

Standard RJ45 in 38999 shell compared to MSMC
Gigabit Ethernet connector
Both at 5:1 scale

Performance Test	Test Method	100 MHz Required Performance (dB)	100 MHz Average Test Results (dB)
NEXT	TIA/IA-568-B.2 Category 5e	>43	60
FEXT		>35	61
Insertion Loss		<0.40	0.05
Return Loss		>20	29

TIA568 Summary for Gigabit Ethernet 8 Position Connectors

Downloaded from Arrow.com.

Product Offering

Shell Size M11 (7 Position shown)

Receptacle Assembly, Solder Cups

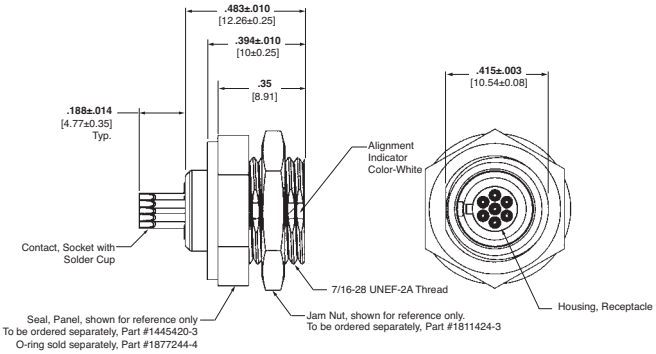

Plug Assembly, Pin Contacts

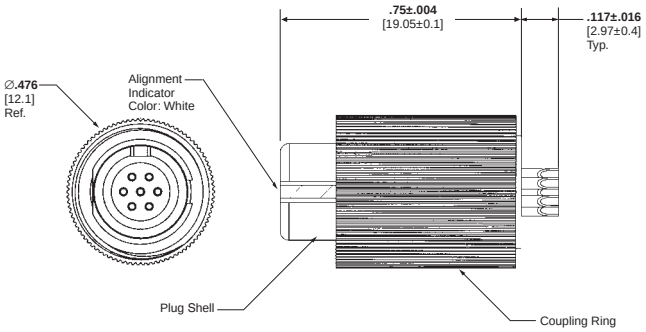

Receptacle Assembly, Board Mount

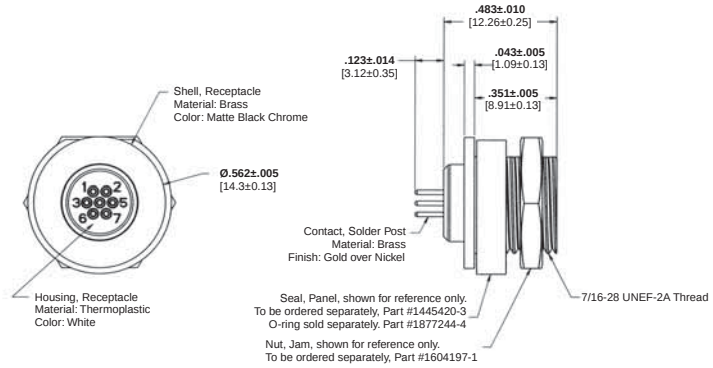

Contact System	Shell Size	No. of Pos.	Rear Panel Mount		
			Solder Cup Receptacle	Plug	Solder Tail Receptacle
Spring Probe	M11	7	1604750-2	1954225-1	1811577-1
	M14	8*	1877236-1	1954525-1	1877666-1
	M14	19	1738553-2	1877255-1	1811547-1
Pin & Socket	M11	7	1738547-2	1954230-1	1811578-1
	M14	8*	1877237-1	1954527-1	1877667-1
	M14	19	1738551-2	1954275-1	1811579-1

Note: Bright Nickel finish available.

*Ethernet configuration

Shell Size M14 (19 Position shown)

Receptacle Assembly, Solder Cup

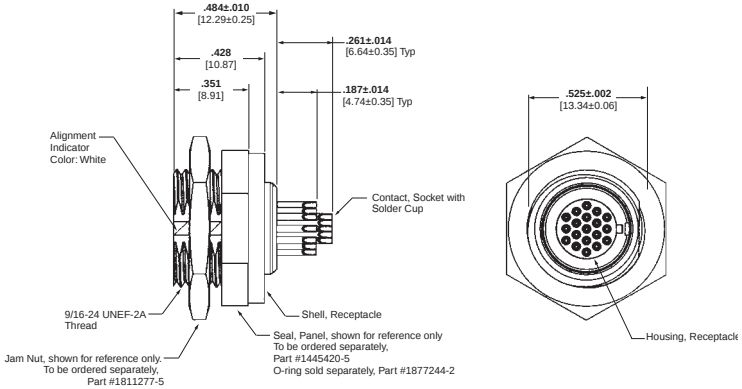

Plug Assembly

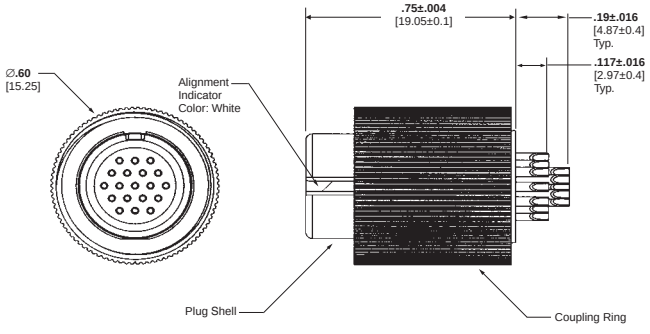

Receptacle Assembly, Board Mount

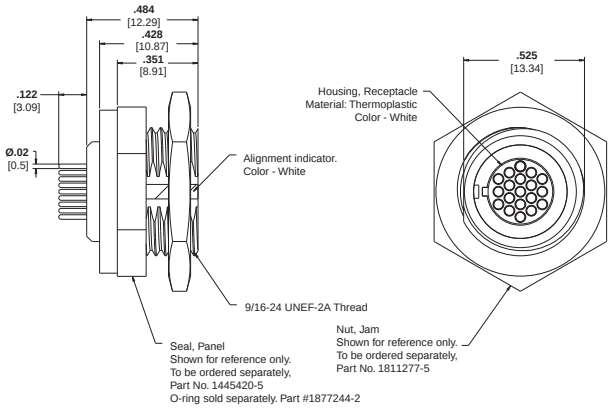

Ethernet Assembly, 8 Position



Downloaded from Arrow.com.

Accessories

Jam Nuts

Shell Size	Dimensions A	Dimensions B	Thread	Finish	Part Number
M11	0.553 [14.05]	0.093 [2.36]	7/16-28 UNEF-2B	Black Chrome	1811424-3
M14	0.750 [19.05]	0.093 [2.36]	9/16-24 UNEF-2B	Black Chrome	1811277-5

Note: Bright nickel finish available.

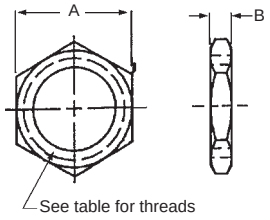

Overmold/Shield Termination Adapters

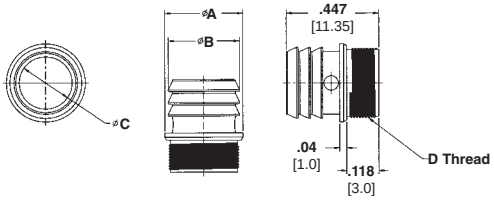

ADAPTER TYPE	OVERMOLD/SHRINK TUBE ADAPTER	INDSIDE DIAMETER	OVERMOLD/SHRINK TUBE & SHIELD TERMINATION ADAPTER	INDSIDE DIAMETER	SHRINK BOOT
CRIMP*	1604386-4	4.9mm [.193]	1604386-7 with crimp ferrule TBD	5.84mm [.230]	VERSAFIT SERIES or RW-175 SERIES (high temp)
TINEL RING**	TXS165XX00-1405A1		TXS165XX00-1405A1 with Tinel Ring TC03A1	4.9mm [.193]	202K1XX SERIES, 202D1XX SERIES, 202D2XX SERIES, or 202C6XX SERIES
BAND STRAP**	BNS165XX00-1103A		BNS165XX00-1103A with Bandstrap BND-1225S/P		
SHRINK BOOT**	SCA165 11-XXX		-	-	

* CABLE NEEDS TO BE DEFINED FOR CRIMP FERRULE

** RAYCHEM SUPPLIED PARTS

M14 SHELL - 19 POSITION

ADAPTER TYPE	OVERMOLD/SHRINK TUBE ADAPTER	INDSIDE DIAMETER	OVERMOLD/SHRINK TUBE & SHIELD TERMINATION ADAPTER	INDSIDE DIAMETER	SHRINK BOOT
CRIMP*	1604386-3	7.2mm [.284]	1-1604368-1 with crimp ferrule TBD	7.2mm [.284]	VERSAFIT SERIES or RW-175 SERIES (high temp)
TINEL RING**	TXS186XX00-1405A1		TXS186XX00-1405A1 with Tinel Ring TR05A1		202K1XX SERIES, 202D1XX SERIES, 202D2XX SERIES, or 202C6XX SERIES
BAND STRAP**	BNS186XX00-1103A		BNS186XX00-1103A with Bandstrap BND-1225S/P		
SHRINK BOOT**	SCA186 11-XXX		-	-	

* CABLE NEEDS TO BE DEFINED FOR CRIMP FERRULE

** RAYCHEM SUPPLIED PARTS

Panel Seals – Closed Cell Neoprene Sponge (color - black)

Shell Size	Dimensions A	Dimensions B	Part Number	Panel Mount
M11	0.430 [10.9]	0.177 [4.5]	1445420-3	Rear
M14	0.551 [14.0]	0.236 [6.0]	1445420-5	Rear

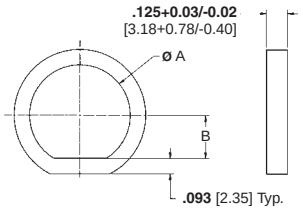

Panel Seals – Flourosilicone O-Ring* (color - blue)

Shell Size	Dimension A	Part Number	Panel Mount
M11	.437±.005 [11.10±0.13]	1877244-4	Rear
M14	.571±.005 [14.52±0.13]	1877244-2	Rear

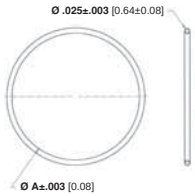

Dust Caps - Receptacle Connector

Shell Size	Dimension B±0.25	Thread	Finish	Part Number
M11	14	7/16-28 UNEF-2B	Black Chrome	1738941-2
M14	17	9/16-24 UNEF-2B	Black Chrome	1738941-4

Note: Bright Nickel finish available.

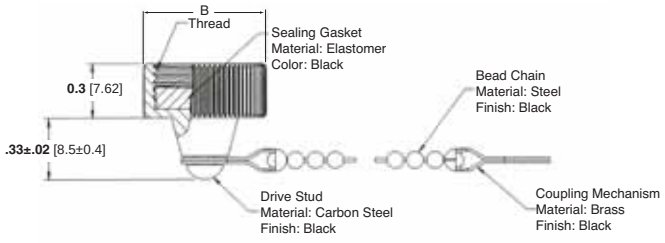

1654950 — PDF — A&D —07/08
©2006, and 2008 by Tyco Electronics Corporation. All Rights Reserved.
TE Logo and Tyco Electronics are trademarks.

Tyco Electronics
Our commitment. Your advantage.

Downloaded from Arrow.com.