Enabling the Electronics Revolution

PIHER sensing systems
an Amphenol® company

PST-360

Hall-Effect Through-Shaft Rotary Position Sensor

Available with CAN CE •PATENTED•

The PST-360 is a Hall-effect through-shaft rotary position sensor that provides accurate absolute angle feedback using a true noncontact sensing element.

Mounted directly at the pivot point, it requires no levers, connecting rods, or other mechanical interfaces.

The design tolerates shaft eccentricity, mounting tolerances, and mechanical wear over the application's life. The device offers endless rotation with a programmable angular range (15° to 360°), multiple output options, and support for both low- and high-voltage supplies. Multi-turn configurations are available upon request.

KEY FEATURES

Non-contacting

True non-contact operation
With no gears or mechanical interfaces, the sensor is easy to assemble and calibrate and exhibits minimal wear over its service life.

Through Shaft Sensor

Through-hole design
Allows shaft insertion from the top or bottom and simplifies assembly in space-constrained applications.

360° Endless Rotation

360-degree absolute position feedback
Continuous mechanical rotation without dead-band; retains position through power loss. Programmable electrical angles from 15° to 360°.

Made for harsh environments
The rugged package protects the sensor from dust, moisture, vibration and extreme temperatures for usage in the most demanding environments.

50 million Long life

Durable and robust design
The non-contacting design allows for an extra-long product lifetime of up to 50 million cycles.

Fully customizable

Configurable
Programmable transfer function and switch outputs; multiple output protocols and redundancy options.

POTENTIAL APPLICATIONS

Industrial

- Autonomous warehouse robotics
- Robotics and automation feedback
- Robot arm position
- Valve monitoring
- Conveyor operation

Transportation

- Steering angle
- Pedal position
- Fork height and mast tilt
- Bucket position
- Hitch position
- Boom angle
- Joystick controls

Marine

- Steering and shifter sensor
- Engine throttle

Home and Building Automation

- HVAC systems

Medical

- Electric hospital bed
- Mobility chair steering and throttle

Downloaded from Arrow.com.

PST-360

Hall-Effect Through-Shaft Rotary Position Sensor

MECHANICAL SPECIFICATIONS	
Rotational life	up to 50,000,000 cycles
Mechanical angular range	360° (endless rotation)
Rotor diameter	14mm / 17mm. Other rotors on request

ELECTRICAL SPECIFICATIONS		
Linearity[1]	Analog, PWM, SPI CAN	±1% absolute (±0.5% upon request) ±3° absolute
Electrical angular range[2]		Programmable from 15° to 360°
Output		Analog (ratiometric) PWM Serial protocol (SPI) CAN SAE J1939 CANopen
Switch output		programmable on request
Resolution	Analog, CAN, PWM SPI	Up to 12 bit Up to 14 bit
Supply voltage[3]	Analog, PWM, SPI CAN	5V ±10% or 7V to 15V 7V to 15V
Supply current	Single version Redundant version CAN version	Typ 8.5 mA Typ 17 mA Typ 47 mA
Voltage protection		±10 V
Self-diagnostic features		yes

[1] Ferromagnetic materials close to the sensor (i.e. shaft, mounting surface) may affect the sensor's linearity.
[2] For information on multi-turn sensors please contact Piher
[3] Voltages up to 25 V possible on request.

ENVIRONMENTAL SPECIFICATIONS		
Operating and storage temperature[1]	Analog, PWM, SPI CAN	–40°C to +125°C –40°C to +85°C
Shock		50g from 15° to 360°
Vibration		5–2,000 Hz; 20 g; Amax 0.75 mm
Sealing[2]		IP67, IP69K
Approval		CE[3]

[1] Other specifications available
[2] IP rating on electronics
[3] EMC-testing according to standards EN 61000-6-2 and EN 6100-6-3. CE-approval applies to analog-simple and analog-redundant models.

OUTPUT FUNCTIONS

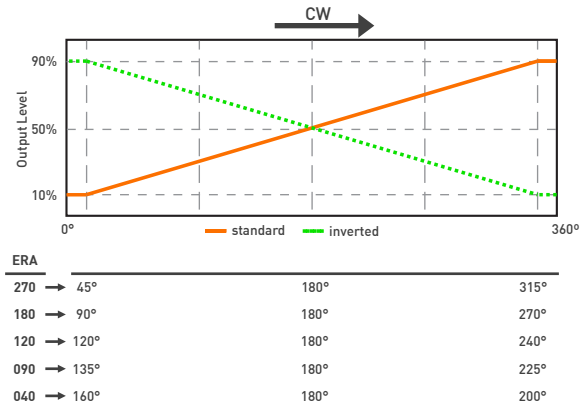

ERA	Standard	Inverted	Redundant & Full Redundant
360°	C0000	C0001	C0002
270°	C0208	C0158	C0031
180°	C0007	C0072	C0036
120°	C0024	C0234	C0032
90°	C0011	CXXXX	C0025
70°	C0150	CXXXX	C0149
60°	C0006	C0260	C0020
40°	C0026	CXXXX	C0123

All output functions are centered at 180°. Output level from 10% to 90%
Linearity is assured within the electrical rotational angle (ERA) only. Other output functions available on request.

Downloaded from Arrow.com.

PST-360

Hall-Effect Through-Shaft Rotary Position Sensor

DIMENSIONS (MM)

Outer Dimensions

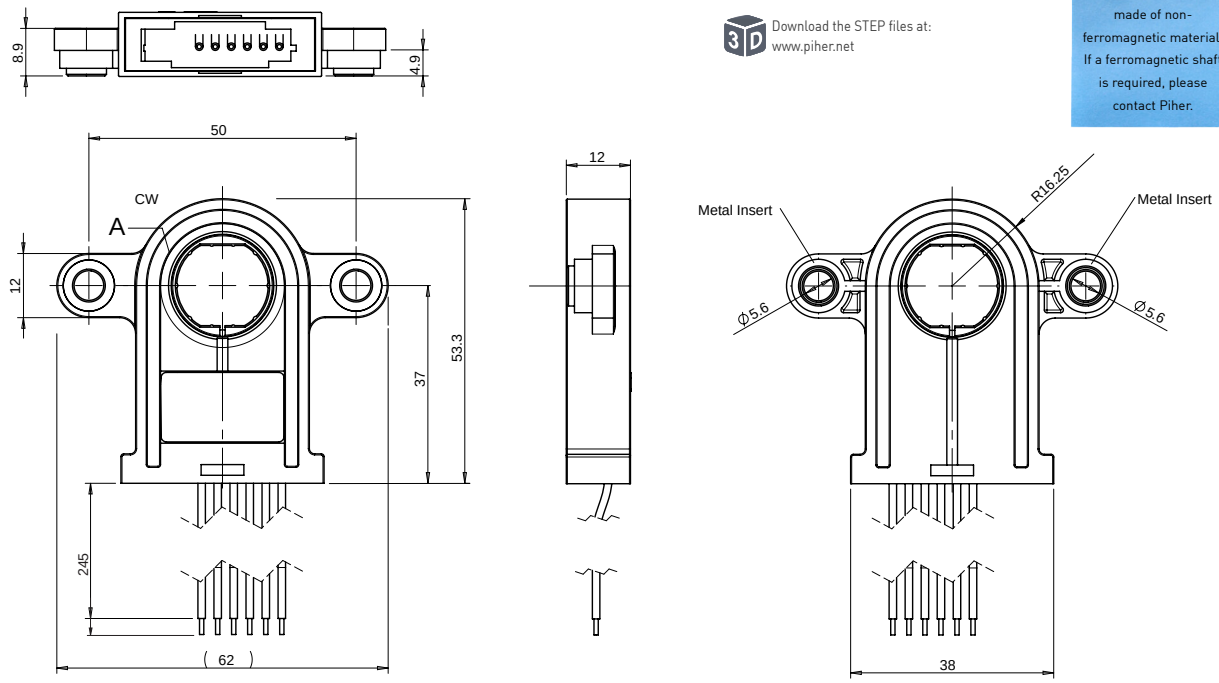

Download the STEP files at: www.piher.net

The shaft should be made of non-ferromagnetic material. If a ferromagnetic shaft is required, please contact Piher.

Sensor shown above is the 17mm version with the rotor at zero position. The sensor is delivered in a random position. Wires: 0.35mm² TXL SAE J1128

14mm rotor

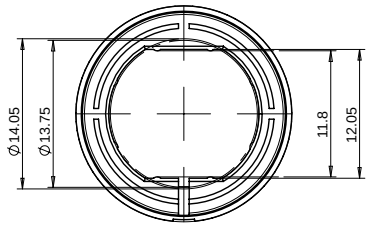

17mm rotor

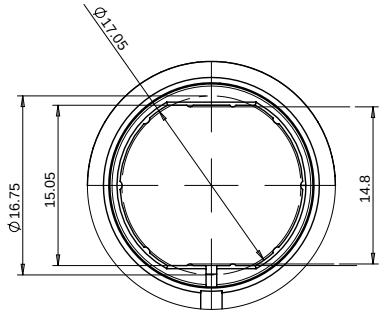

Recommended shaft dimensions

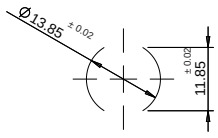

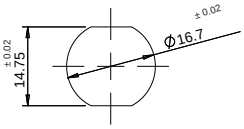

WIRING/CONNECTION DIAGRAM

Color	Simple		Redundant		Full-redundant	CAN	SPI
	5V	7V to 15V	5V	7V to 15V	Analog or PWM		
Brown	Power supply	Power supply	Power supply	Power supply	Power supply 1	Power supply	Power supply
Blue	Ground	Ground	Ground	Ground	Ground 1	Ground	Ground
Black	Signal output	Signal output	Signal output 1	Signal output 1	Ground 2	CAN High	MOSI
White	n/a	n/a	Signal output 2	Signal output 2	Signal output 2	CAN Low	/SS
Red	n/a	n/a	n/a	n/a	Power supply 2	n/a	n/a
Yellow	n/a	n/a	n/a	n/a	Signal output 1	n/a	n/a
Grey	n/a	Not used	n/a	Not used	n/a	n/a	SCLK

Further instructions are available at www.piher.net. Connector assembly available on request.

Downloaded from Arrow.com.

PST-360

Hall-Effect Through-Shaft Rotary Position Sensor

HOW TO ORDER (Example: PST360G2-1A-C0001-ERA190-05K)

Simple Output - Analog, PWM or CAN

PST360G2 - _ 1 _ - C_ _ _ _ - ERA_ _ _ - _ _ K - _ _ _ _

Series	Rotor[1]	Type	Output[2]	Output function[3]	Electric rotational angle[4]	Voltage supply[5]	Temp. range[6]	PWM Frequency Hz[7]
	[empty] = 14mm B = 17mm	1 = simple	A = Analog P = PWM J = CAN SAE J1939 O = CANopen	C0000 C0001	ERA040 ... ERA360	05 = 5V ±10% RE = 7V-15V	Analog, PWM = −40°C to +125°C CAN: −40°C to +85°C	[empty] = 200Hz F100 = 100Hz F101 = 101Hz ... F999 = 999Hz

Simple output - SPI

PST360G2 - _ 1 S - C_ _ _ _ - ERA_ _ _ - _ _ K

Series	Rotor[1]	Type	Output[2]	Output function[3]	Electric rotational angle[4]	Supply voltage[5]	Temp. range
	[empty] = 14mm B = 17mm	1 = simple	S = SPI	C0000 C0001	ERA040 ... ERA360	05 = 5V ±10% RE = 7V-15V	K = −40°C to +125°C

Redundant output - Analog, PWM or CAN

PST360G2 - _ 2 _ _ - C_ _ _ _ - ERA_ _ _ - _ _ K - _ _ _ _ _ _ _ _

Series	Rotor[1]	Type	Output[2]	Output function[3]	Electrical rotational angle[4]	Supply voltage[5]	Temp. range[6]	PWM Frequency Hz. (1)[7]	PWM Frequency Hz. (2)[7]
	[empty] = 14mm B = 17mm	2 = redundant	AA = Analog PP = PWM JJ = CAN SAE J1939 OO = CANopen	C0002	ERA040 ... ERA360	05 = 5V ±10% RE = 7V-15V	Analogic, PWM = −40°C to +125°C CAN: −40°C to +85°C	F100 F101 ... F999	F100 F101 ... F999

Full-redundant output - Analog or PWM

PST360G2 - _ 3 _ _ - C_ _ _ _ - ERA_ _ _ - 05 K - _ _ _ _ _ _ _ _

Series	Rotor[1]	Type	Output[2]	Output function[3]	Electrical rotational angle[4]	Supply voltage	Temp. range	PWM Frequency Hz. (1)[7]	PWM Frequency Hz. (2)[7]
	[empty] = 14mm B = 17mm	3 = full-redundant	AA = Analog PP = PWM	C0002	ERA040 ... ERA360	05 = 5V ±10%	−40°C to +125°C	F100 F101 ... F999	F100 F101 ... F999

Full-redundant output - Analog and SPI

PST360G2 - _ 3 SSA - C_ _ _ _ - ERA_ _ _ - 05 K

Series	Rotor[1]	Type	Output[8]	Output function[8]	Electrical rotational angle[8]	Supply voltage	Temp. range
	[empty] = 14mm B = 17mm	3 = full-redundant	SSA = Analog and SPI	CXXXX	ERA050 ERA090	05 = 5V ±10%	−40°C to +125°C

1 Other rotors available on request.
2 The analog output is ratiometric, proportional: for supply voltage "5V" to input voltage; for supply voltage "RE" to 5V.
3 Other output functions available, please check availability. Enter CXXXX as long as the new output function is not defined.
4 Models with ERA < 40° available on request.
5 CAN models are available in 7V-15V. For other voltages up to 25V: check availability.
6 CAN models: other temperatures to be studied on request.
7 Leave blank if not applicable. Default frequency is 200 Hz.
8 Sensor with three isolated outputs, two SPI (tapers A and B) plus one Analog (taper C). All of them measure the same ERA. Check part numbering and specifications with Piher.

check inventory

Downloaded from Arrow.com.

PST-360

Hall-Effect Through-Shaft Rotary Position Sensor

SPECIAL ROTORS

Ref. 3457	Ref. 3458
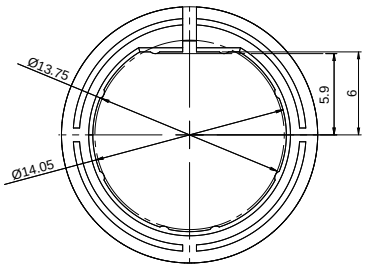	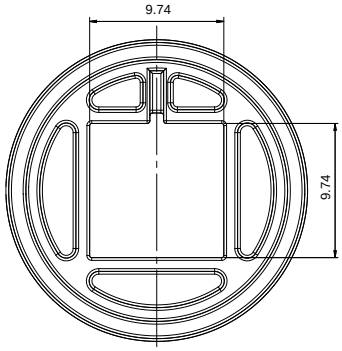

For more information visit: www.piher.net

MOUNTING INSTRUCTIONS

1. Place the component on a flat surface.
2. Insert the application shaft (see recommended shaft dimensions) through the sensor's rotor, avoiding any mechanical play/wobble.
3. Fasten the two M5 screws (M5 washers are recommended).

OUR ADVANTAGE

- Leading-edge, innovative position-sensing solutions
  - Contactless (Hall-effect and Inductive Technology)
  - Contacting (Potentiometers, Printed Electronics)
- Engineering design-in support
- All our products can be customized to fit the target application and customer requirements
- Capability to move seamlessly from development to true high-volume production
- A global footprint with global engineering and commercial support
- One-stop shop not limited to position sensors (temperature, pressure, gas,...) through group collaboration
- Flexibility and entrepreneurship of a medium-sized company with the backing of Amphenol Corporation

To ensure you have the most up-to-date information, we recommend always downloading the latest version of this datasheet from www.piher.net

Disclaimer:
The product information in this catalog is for reference purposes. Please consult for the most up to date and accurate design information.
Piher Sensors & Controls S.A., its affiliates, agents, and employees, and all persons acting on its or their behalf (collectively, "Piher"), disclaim any and all liability for any errors, inaccuracies or incompleteness contained herein or in any other disclosure relating to any product described herein.
Piher disclaims any and all liability arising out of the use or application of any product described herein or of any information provided herein to the maximum extent permitted by law. The product specifications do not expand or otherwise modify Piher's terms and conditions of sale, including but not limited to the warranty expressed therein, which apply to these products.
No license, express or implied, by estoppel or otherwise, to any intellectual property rights is granted by this document or by any conduct of Piher.
The products shown herein are not designed for use in medical, life-saving, or life-sustaining applications unless otherwise expressly indicated. Customers using or selling Piher products not expressly indicated for use in such applications do so entirely at their own risk and agree to fully indemnify Piher for any damages arising or resulting from such use or sale. Please contact authorized Piher personnel to obtain written terms and conditions regarding products designed for such applications.
Product names and markings noted herein may be trademarks of their respective owners. Information contained in and/or attached to this catalog may be subject to export control regulations of the European Community, USA, or other countries. Each recipient of this document is responsible to ensure that usage and/or transfer of any information contained in this document complies with all relevant export control regulations. If you are in any doubt about the export control restrictions that apply to this information, please contact the sender immediately. For any Piher Exports, Note: All products / technologies are EAR99 Classified commodities. Exports from the United States are in accordance with the Export Administration Regulations. Diversion contrary to US law is prohibited.

CONTACT

Piher Sensing Systems
Polígono Industrial Municipal
Vial T2, Nº22
31500 Tudela, Spain

sales@piher.net

✆ +34 948 820 450

NEED QUICK HELP?
Our AI Virtual Assistant is available 24/7 to provide instant support—visit **chat.piher.info** now!

Rev: 14112025 © 2024 Piher Sensors & Controls S.A

Downloaded from Arrow.com.