MICRO SWITCH
FREEPORT, ILLINOIS, U.S.A.
A DIVISION OF HONEYWELL
FED. MFG. CODE 81020

SWITCH-ENCLOSED

CATALOG LISTING
31EN20-6

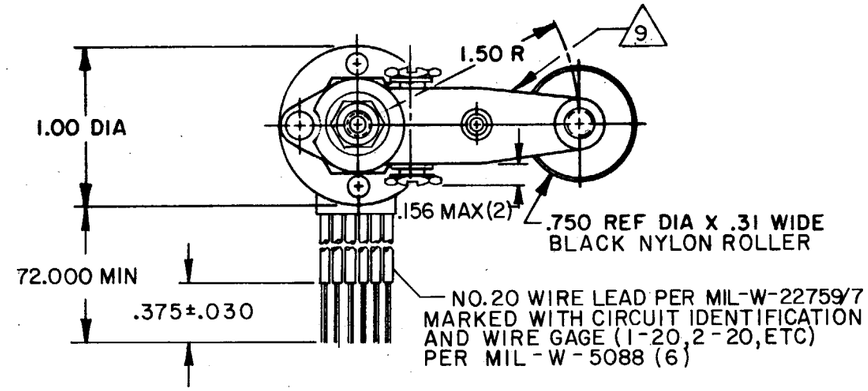

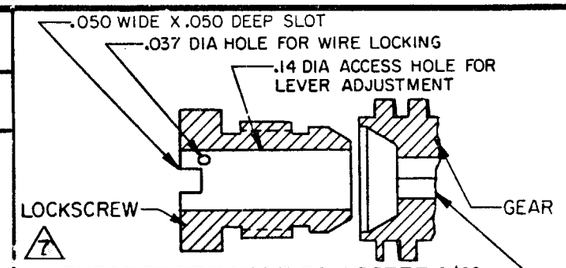

LEVER MAY BE ADJUSTED FOR AN INFINITE NUMBER OF POSITIONS THRU 360°. ADJUSTMENT IS MADE BY LOOSENING THE LOCKING NUT AND THEN THE LOCK-SCREW AND TURNING GEAR UNTIL LEVER IS IN DESIRED POSITION. LOCKSCREW AND LOCKNUT ON SHAFT IS THEN TIGHTENED TO POSITIVELY LOCK LEVER IN POSITION.

LEVER ADJUSTMENT DETAIL - SCALE 2 TO 1

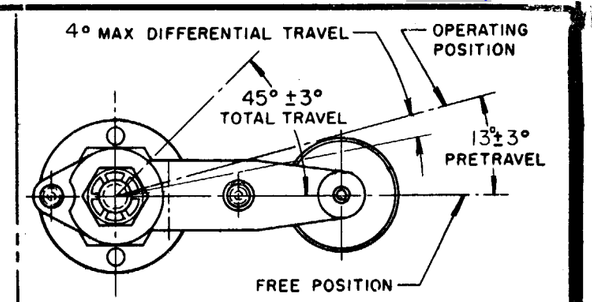

CHARACTERISTICS

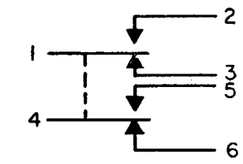

CIRCUIT DIAGRAM

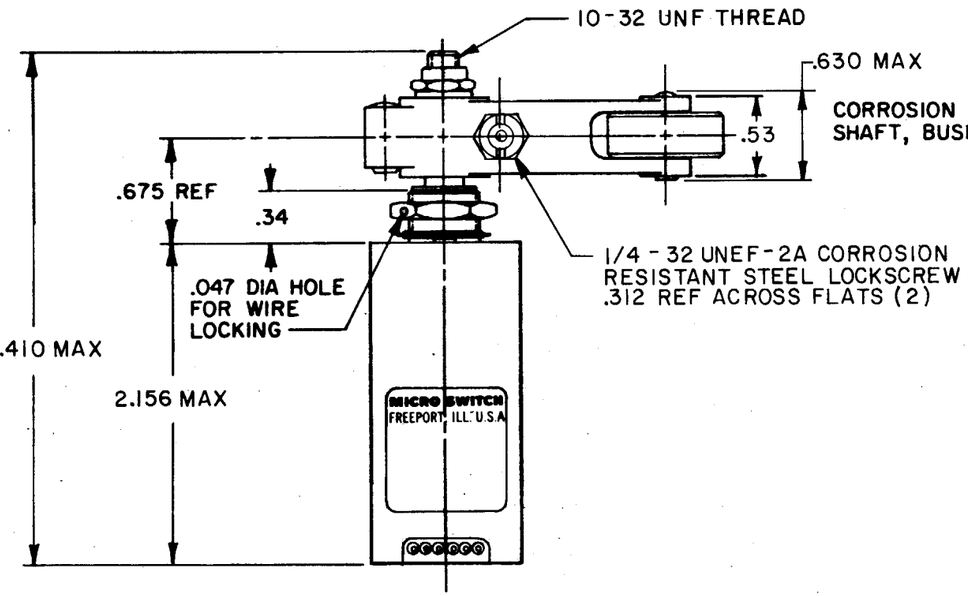

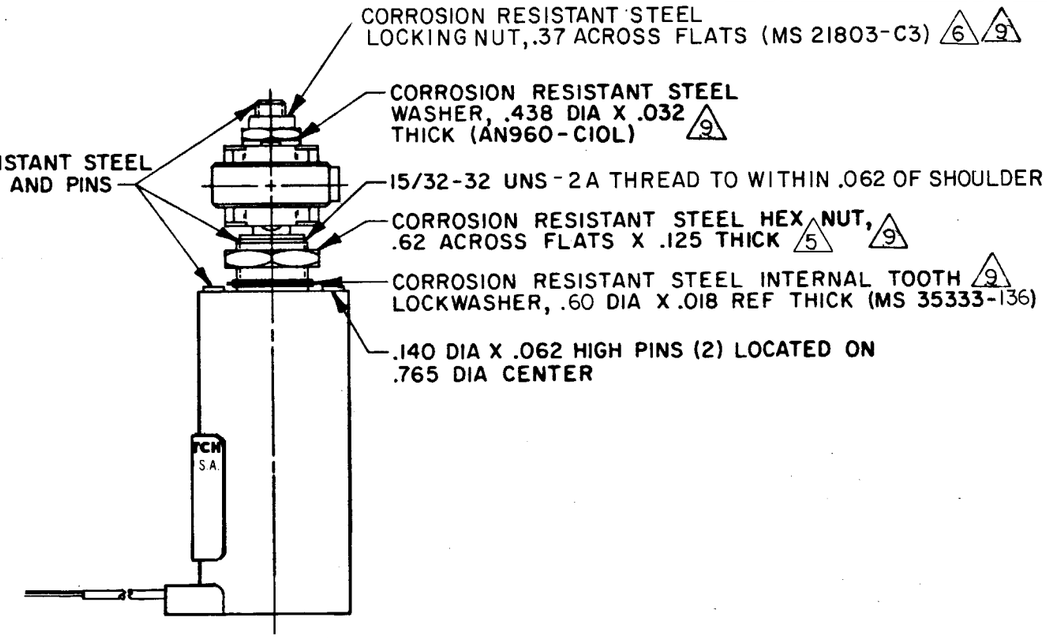

NOTES
1 - CORROSION RESISTANT STEEL ENCLOSURE
2 - SWITCH SEALED PER MIL-S-8805 SYMBOL 4
3 - CIRCUIT DIAGRAM AND CAT. LISTING ARE SHOWN ON NAMEPLATE
4 - TOTAL TRAVEL OF ROLLER LEVER IS 45°±3° IN COUNTER CLOCK-WISE DIRECTION ONLY WITH SPRING RETURN TO NEUTRAL
5 REPLACEMENT MOUNTING HARDWARE PACKET 19PA10
6 DO NOT APPLY MORE THAN 20-25 INCH-POUNDS OF TORQUE WHEN TIGHTENING LOCKING NUT
7 WORM GEAR TO TURN WITH 6 IN-LB MAX TORQUE WITH SCREWS LOCKED OUT TIGHT
8 - REPLACEMENT LEVER 6PA351
9 HARDWARE MAY BE PACKAGED UNASSEMBLED PER MIL-S-8805

THIS DRAWING COVERS A PROPRIETARY ITEM AND IS THE PROPERTY OF MICRO SWITCH, A DIVISION OF HONEYWELL. THIS DRAWING IS NOT TO BE COPIED OR USED WITHOUT THE APPROVAL OF MICRO SWITCH.

CHARACTERISTICS

OPERATING TORQUE - - - 12-25 IN LB
RELEASE TORQUE - - - - 9 IN LB MIN

PRETRAVEL
DIFFERENTIAL TRAVEL
OVERTRAVEL
FREE POSITION
} SEE DETAIL

ELECTRICAL DATA

CONTACT ARRANGEMENT
S P D T (2)

LOAD	28 VDC SEA LEVEL	28 VDC 50,000 FT.
RES	5	5
IND	3	2
MOTOR	4	
LAMP		

SCALE FULL
DO NOT SCALE PRINT
TOLERANCES
APPLY TO DESIGN UNITS. CONVERSIONS ARE ONLY FOR REFERENCE. UNLESS NOTED, TOLERANCES ARE 2

	DIM. mm	TOL. mm/in	DIM. in	TOL. mm/in
NO PLACES	X	1/.04		
ONE PLACE	X.X	0.4/.016	X.X	0.8/.03
TWO PLACES	X.XX	0.15/.006	X.XX	0.38/.015
THREE PLACES			X.XXX	0.13/.005
ANGLES				

SI METRIC ☐ US CUSTOMARY ☒
DESIGN UNITS
THIRD ANGLE PROJECTION
WEIGHT 9.5 OZ MAX

31EN20-6
M
DRAWING NUMBER
RELEASE NO. PR-5293
REPLACES
ISSUE X 7 6 X 5
CHECK
REVISIONS
A CO-44351 KAK 9 JAN 79
B CO4757 TSM 11 AUG 80
C CO 49805C KAG 26 SEP 81
D CO 57370 WJM 14 MAY 85
E CO 75787-C DAW 10 MAY 94
9 JAN 80 CEB
CHECK
DRAWN 9 JAN 79 KAK
FO-6285 1-B

Downloaded from Arrow.com.