THIS DRAWING IS UNPUBLISHED. 2021 TE Connectivity. All Rights Reserved.
RELEASED FOR PUBLICATION
© COPYRIGHT
ALL RIGHTS RESERVED.

(T41621X3*) M12 ST MALE TO M12 ST FEMALE DOUBLE ENDED CABLE ASSEMBLY (Shielded)

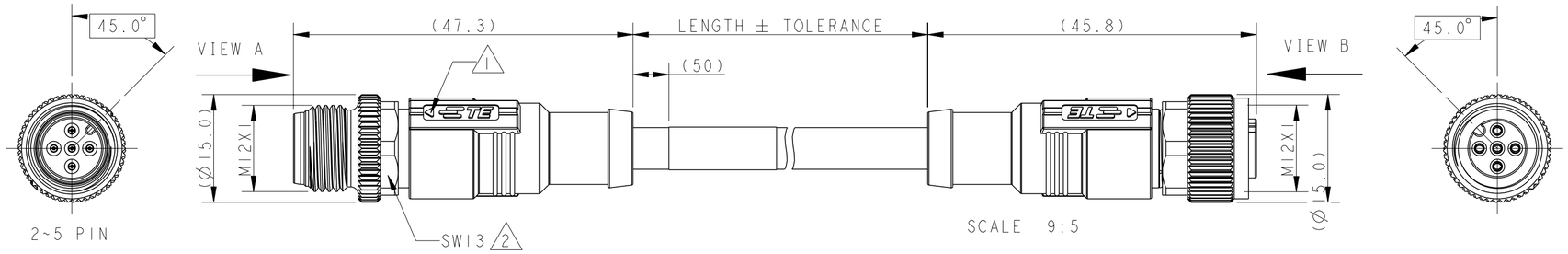

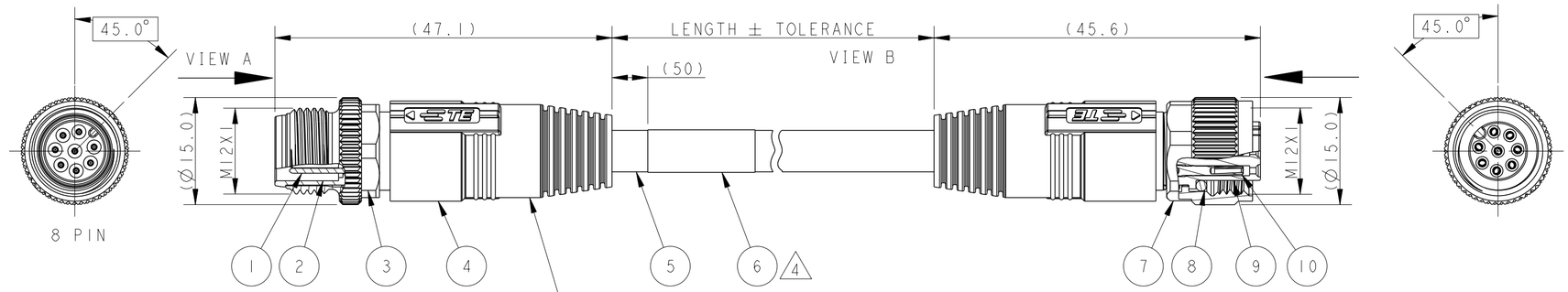

REVISIONS					
P	LTR	DESCRIPTION	DATE	DWN	APVD
	A	INITIAL RELEASE	25APR2021	BP	CW

ITEM	DESCRIPTION	MATERIAL	OTHERS
1	MALE CONTACT	COPPER ALLOY	FLASH GOLD
2	MALE HOUSING	NYLON	BLACK
3	MALE NUT	COPPER ALLOY	NICKEL PLATED
4	OVER-MOLDING	POLYURETHANE	BLUE
5	CABLE	1=PVC 2=PUR	PVC:BLACK PUR:GRAY
6	LABEL	-	-
7	FEMALE NUT	COPPER ALLOY	NICKEL PLATED
8	O-RING	SILICONE	GRAY
9	FEMALE HOUSING	NYLON	BLACK
10	FEMALE CONTACT	COPPER ALLOY	FLASH GOLD

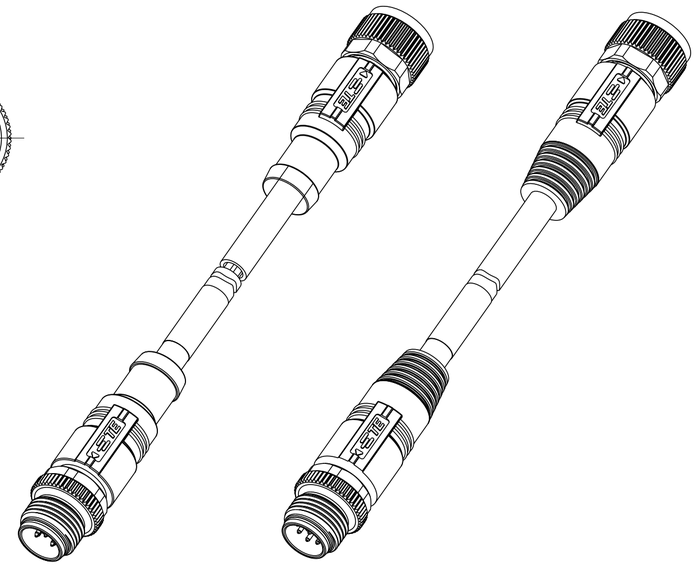

PN	T41621X3002-XXX	T41621X3003-XXX	T41621X3004-XXX	T41621X3005-XXX	T41621X3008-XXX
VIEW A	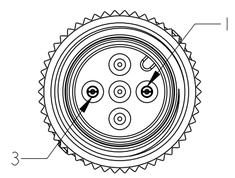	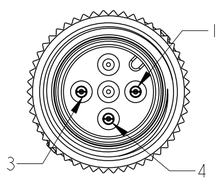	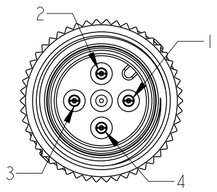	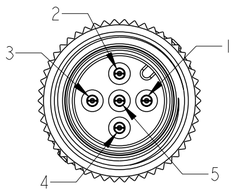	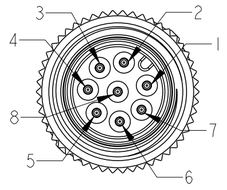
VIEW B	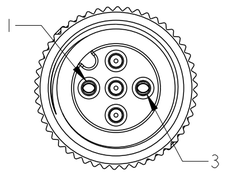	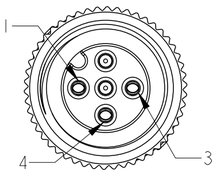	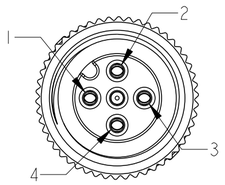	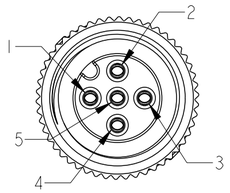	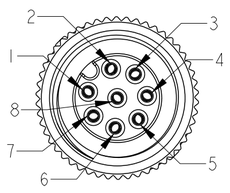
WIRING DIAGRAM	PIN / WIRE	PIN / WIRE	PIN / WIRE	PIN / WIRE	PIN / WIRE
	1 BROWN	1 BROWN	1 BROWN	1 BROWN	1 WHITE
	2 ---	2 ---	2 WHITE	2 WHITE	2 BROWN
	3 BLUE	3 BLUE	3 BLUE	3 BLUE	3 GREEN
	4 ---	4 BLACK	4 BLACK	4 BLACK	4 YELLOW
	5 ---	5 ---	5 ---	5 GREY	5 GREY
					6 PINK
					7 BLUE
					8 RED
STANDARD	CODING REQUIRED TO IEC 61076-2-101				

TECHNICAL DATA	T41621X3002-XXX	T41621X3003-XXX	T41621X3004-XXX	T41621X3005-XXX	T41621X3008-XXX
RATED VOLTAGE	250V			60V	30V
RATED IMPULSE VOLTAGE	2500V			1500V	800V
RATED CURRENT	4A				2A
POLLUTION DEGREE	3				
OVERVOLTAGE CATEGORY	II				
MATERIAL GROUP	II				
DEGREE OF PROTECTION	IP67				

THIS DRAWING IS A CONTROLLED DOCUMENT.

DIMENSIONS: mm

TOLERANCES UNLESS OTHERWISE SPECIFIED:
0 PLC ±-
1 PLC ±-
2 PLC ±-
3 PLC ±-
4 PLC ±-
ANGLES ±-

MATERIAL -
-

FINISH -
-

DWN BLAZE PENG 10APR2021
CHK KEVIN HUANG 10APR2021
APVD CHRIS WANG 10APR2021
PRODUCT SPEC 108-106140
APPLICATION SPEC 114-137144
WEIGHT -

ENTRELEC
Electrical Solutions

NAME MI2 CABLE ASSEMBLY DOUBLE END SHIELDED

SIZE	CAGE CODE	DRAWING NO	RESTRICTED TO
A2	00779	C-ISET3IIC04R0000	-

CUSTOMER DRAWING | SCALE 1:1 | SHEET 1 OF 5 | REV A

1471-9 (3/13)

Downloaded from Arrow.com.

THIS DRAWING IS UNPUBLISHED.
2021 TE Connectivity. All Rights Reserved.
© COPYRIGHT
RELEASED FOR PUBLICATION
ALL RIGHTS RESERVED.

(T41621X4*) M12 ST MALE TO M12 R/A FEMALE DOUBLE ENDED CABLE ASSEMBLY (Shielded)

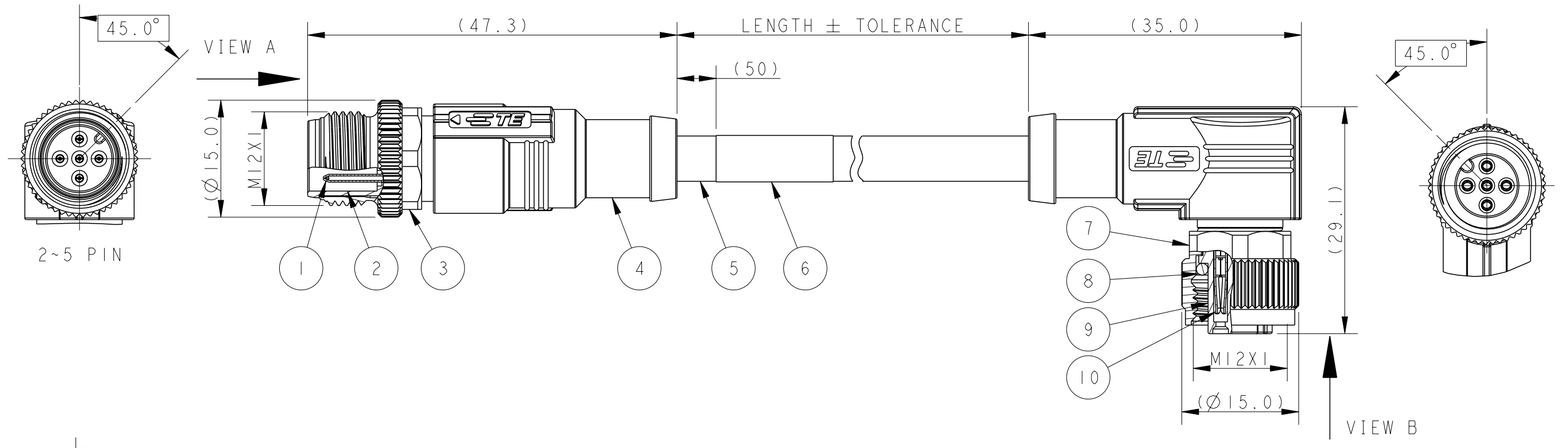

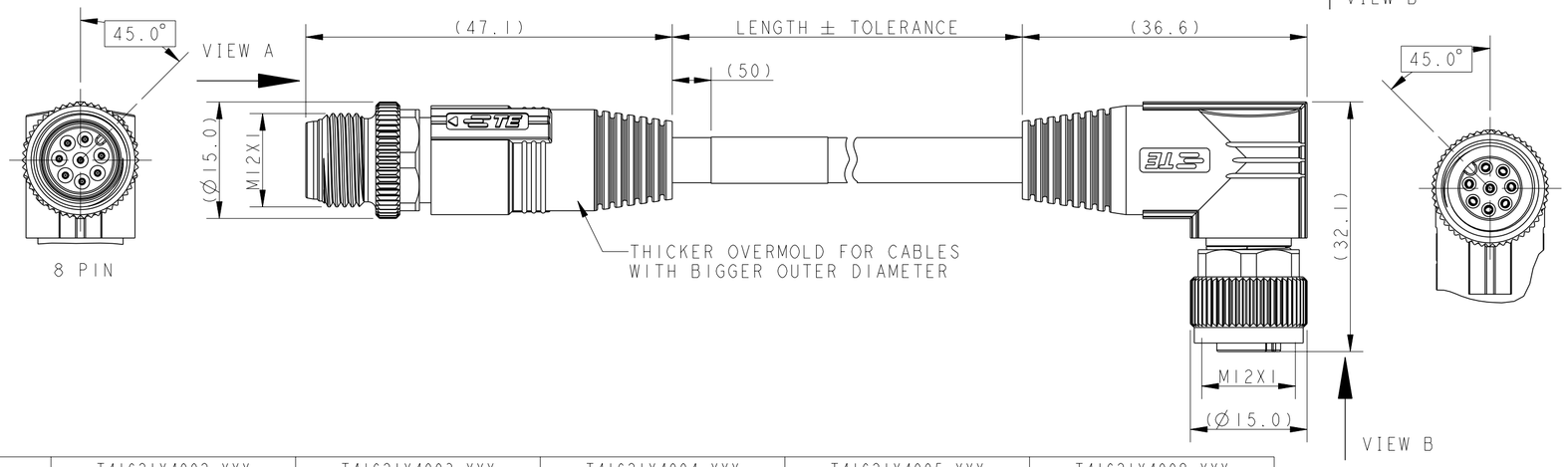

PN	T41621X4002-XXX	T41621X4003-XXX	T41621X4004-XXX	T41621X4005-XXX	T41621X4008-XXX
VIEW A	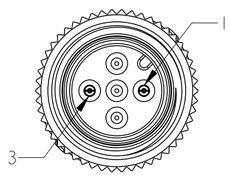	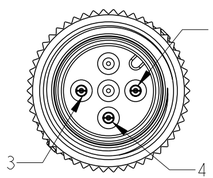	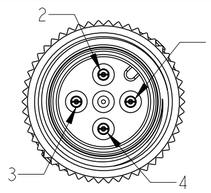	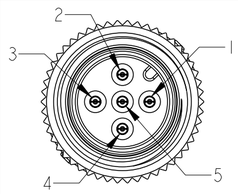	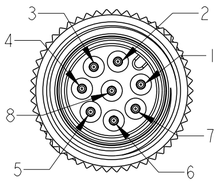
VIEW B	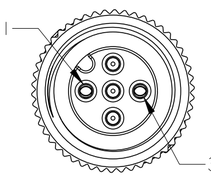	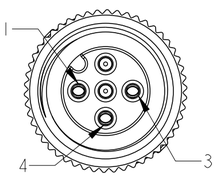	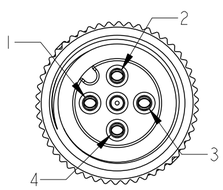	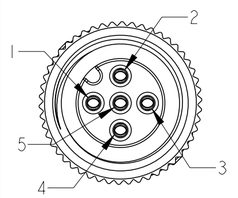	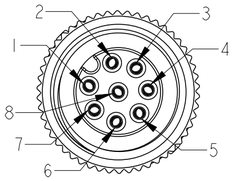
WIRING DIAGRAM	PIN WIRE 1 BROWN 2 --- 3 BLUE 4 --- 5 ---	PIN WIRE 1 BROWN 2 --- 3 BLUE 4 BLACK 5 ---	PIN WIRE 1 BROWN 2 WHITE 3 BLUE 4 BLACK 5 ---	PIN WIRE 1 BROWN 2 WHITE 3 BLUE 4 BLACK 5 GREY	PIN WIRE 1 WHITE 2 BROWN 3 GREEN 4 YELLOW 5 GREY 6 PINK 7 BLUE 8 RED
STANDARD	CODING REQUIRED TO IEC 61076-2-101				

REVISIONS					
P	LTR	DESCRIPTION	DATE	DWN	APVD
		SEE SHEET 1			

ITEM	DESCRIPTION	MATERIAL	OTHERS
1	MALE CONTACT	COPPER ALLOY	FLASH GOLD
2	MALE HOUSING	NYLON	BLACK
3	MALE NUT	COPPER ALLOY	NICKEL PLATED
4	OVER-MOLDING	POLYURETHANE	BLUE
5	CABLE	1=PVC 2=PUR	PVC:BLACK PUR:GRAY
6	LABEL	-	-
7	FEMALE NUT	COPPER ALLOY	NICKEL PLATED
8	O-RING	SILICONE	GRAY
9	FEMALE HOUSING	NYLON	BLACK
10	FEMALE CONTACT	COPPER ALLOY	FLASH GOLD

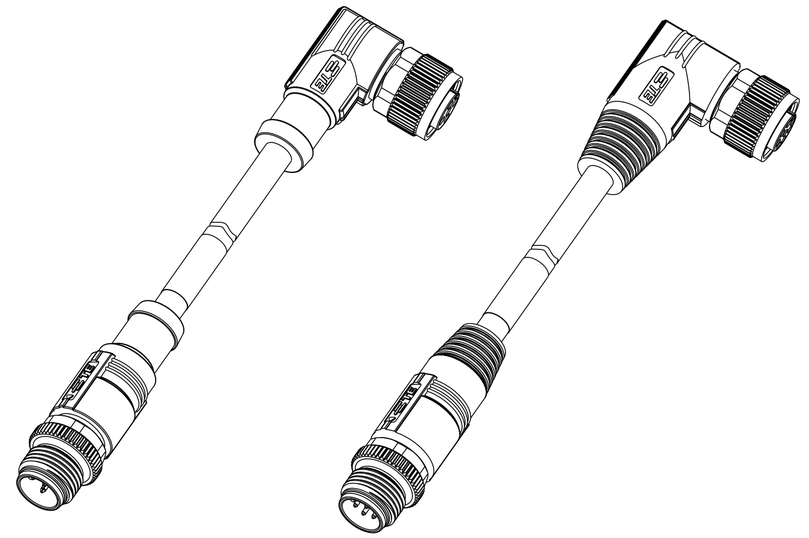

TECHNICAL DATA	T41621X4002-XXX	T41621X4003-XXX	T41621X4004-XXX	T41621X4005-XXX	T41621X4008-XXX
RATED VOLTAGE	250V			60V	30V
RATED IMPULSE VOLTAGE	2500V			1500V	800V
RATED CURRENT	4A				2A
POLLUTION DEGREE	3				
OVERVOLTAGE CATEGORY	II				
MATERIAL GROUP	II				
DEGREE OF PROTECTION	IP67				

THIS DRAWING IS A CONTROLLED DOCUMENT.

DIMENSIONS: mm

TOLERANCES UNLESS OTHERWISE SPECIFIED:
0 PLC ±-
1 PLC ±-
2 PLC ±-
3 PLC ±-
4 PLC ±-
ANGLES ±-

MATERIAL -
-

FINISH -
-

DWN BLAZE PENG 10APR2021
CHK KEVIN HUANG 10APR2021
APVD CHRIS WANG 10APR2021
PRODUCT SPEC 108-106140
APPLICATION SPEC 114-137144
WEIGHT -

ENTRELEC
Electrical Solutions

NAME M12 CABLE ASSEMBLY DOUBLE END SHIELDED

SIZE	CAGE CODE	DRAWING NO	RESTRICTED TO
A2	00779	C-1SET311C04R0000	-

CUSTOMER DRAWING | SCALE 1:1 | SHEET 2 OF 5 | REV A

1471-9 (3/13)

Downloaded from Arrow.com.

THIS DRAWING IS UNPUBLISHED.
2021 TE Connectivity. All Rights Reserved.
© COPYRIGHT
RELEASED FOR PUBLICATION
ALL RIGHTS RESERVED.

(T41622X3*) M12 R/A MALE TO M12 ST FEMALE DOUBLE ENDED CABLE ASSEMBLY (Shielded)

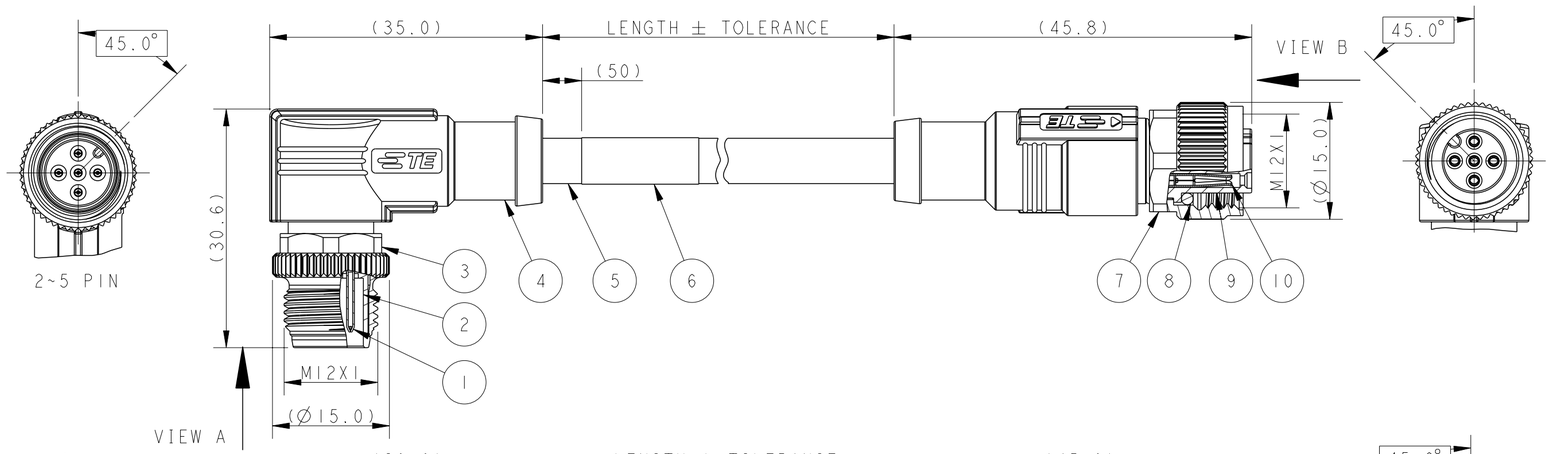

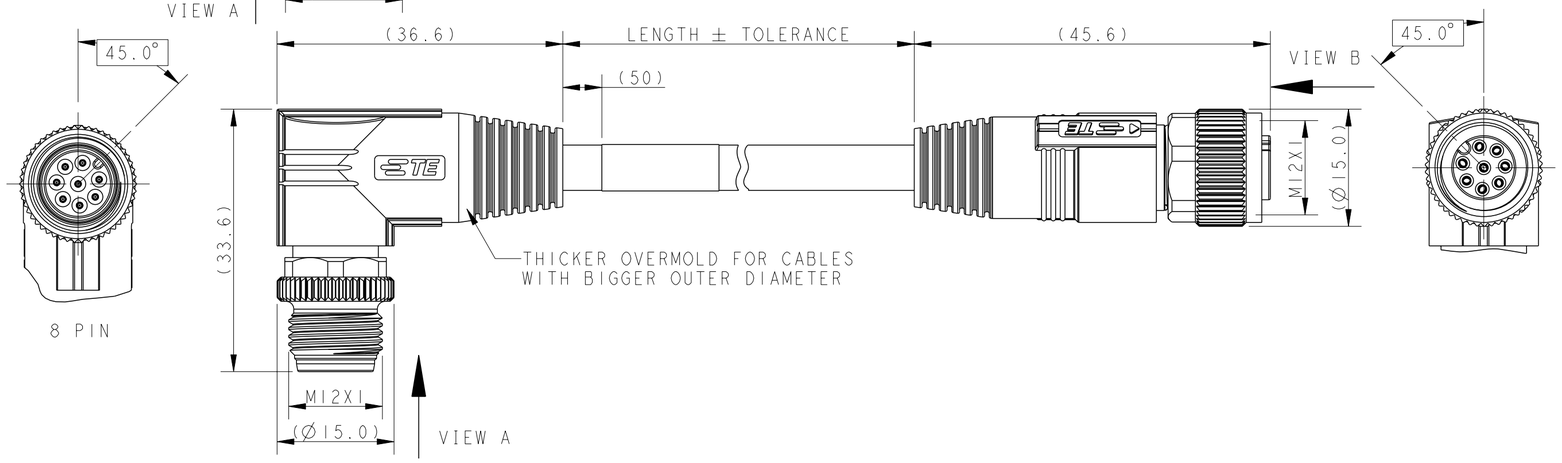

REVISIONS					
P	LTR	DESCRIPTION	DATE	DWN	APVD
		SEE SHEET 1			

ITEM	DESCRIPTION	MATERIAL	OTHERS
1	MALE CONTACT	COPPER ALLOY	FLASH GOLD
2	MALE HOUSING	NYLON	BLACK
3	MALE NUT	COPPER ALLOY	NICKEL PLATED
4	OVER-MOLDING	POLYURETHANE	BLUE
5	CABLE	1=PVC 2=PUR	PVC:BLACK PUR:GRAY
6	LABEL	-	-
7	FEMALE NUT	COPPER ALLOY	NICKEL PLATED
8	O-RING	SILICONE	GRAY
9	FEMALE HOUSING	NYLON	BLACK
10	FEMALE CONTACT	COPPER ALLOY	FLASH GOLD

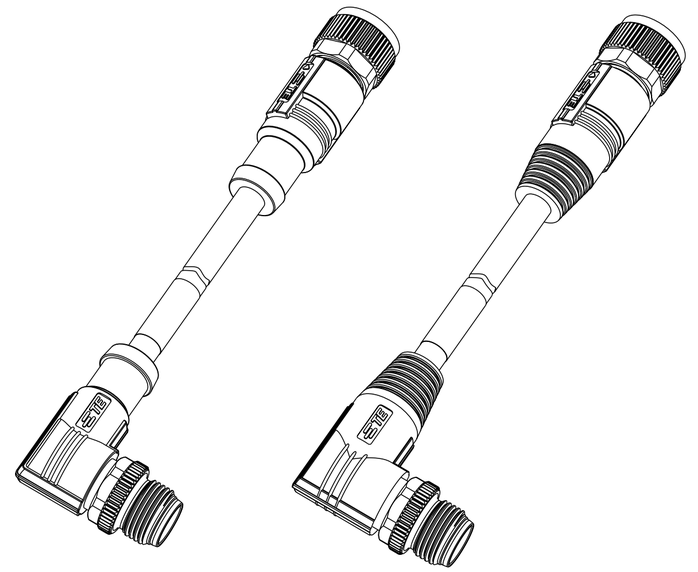

PN	T41622X3002-XXX	T41622X3003-XXX	T41622X3004-XXX	T41622X3005-XXX	T41622X3008-XXX
VIEW A	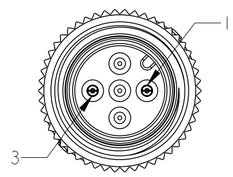	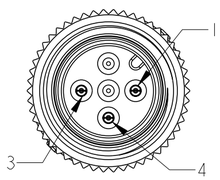	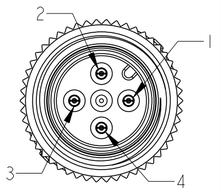	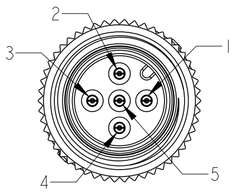	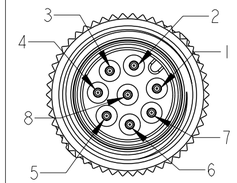
VIEW B	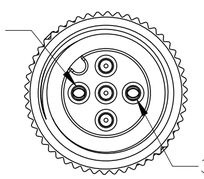	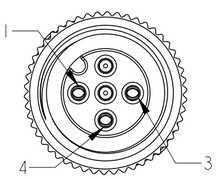	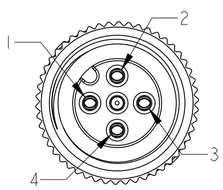	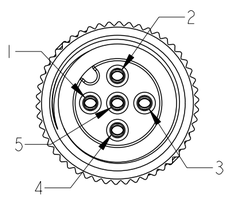	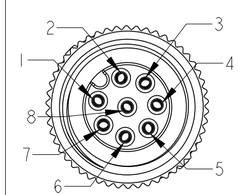
WIRING DIAGRAM	PIN WIRE 1 BROWN 2 --- 3 BLUE 4 --- 5 ---	PIN WIRE 1 BROWN 2 --- 3 BLUE 4 BLACK 5 ---	PIN WIRE 1 BROWN 2 WHITE 3 BLUE 4 BLACK 5 ---	PIN WIRE 1 BROWN 2 WHITE 3 BLUE 4 BLACK 5 GREY	PIN WIRE 1 WHITE 2 BROWN 3 GREEN 4 YELLOW 5 GREY 6 PINK 7 BLUE 8 RED
STANDARD	CODING REQUIRED TO IEC 61076-2-101				

TECHNICAL DATA	T41622X3002-XXX	T41622X3003-XXX	T41622X3004-XXX	T41622X3005-XXX	T41622X3008-XXX
RATED VOLTAGE	250V			60V	30V
RATED IMPULSE VOLTAGE	2500V			1500V	800V
RATED CURRENT	4A				2A
POLLUTION DEGREE	3				
OVERVOLTAGE CATEGORY	II				
MATERIAL GROUP	II				
DEGREE OF PROTECTION	IP67				

THIS DRAWING IS A CONTROLLED DOCUMENT.

DIMENSIONS: mm

TOLERANCES UNLESS OTHERWISE SPECIFIED:
0 PLC ±-
1 PLC ±-
2 PLC ±-
3 PLC ±-
4 PLC ±-
ANGLES ±-

MATERIAL -
FINISH -
- -

DWN BLAZE PENG 10APR2021
CHK KEVIN HUANG 10APR2021
APVD CHRIS WANG 10APR2021
PRODUCT SPEC 108-106140
APPLICATION SPEC 114-137144
WEIGHT -

ENTRELEC
Electrical Solutions

NAME M12 CABLE ASSEMBLY DOUBLE END SHIELDED

SIZE	CAGE CODE	DRAWING NO	RESTRICTED TO
A2	00779	C-1SET311C04R0000	-

CUSTOMER DRAWING | SCALE 1:1 | SHEET 3 OF 5 | REV A

1471-9 (3/13)

Downloaded from Arrow.com.

THIS DRAWING IS UNPUBLISHED.
2021 TE Connectivity. All Rights Reserved.
© COPYRIGHT
RELEASED FOR PUBLICATION
ALL RIGHTS RESERVED.

(T41622X4*) M12 R/A MALE TO M12 R/A FEMALE DOUBLE ENDED CABLE ASSEMBLY (Shielded)

REVISIONS					
P	LTR	DESCRIPTION	DATE	DWN	APVD
		SEE SHEET 1			

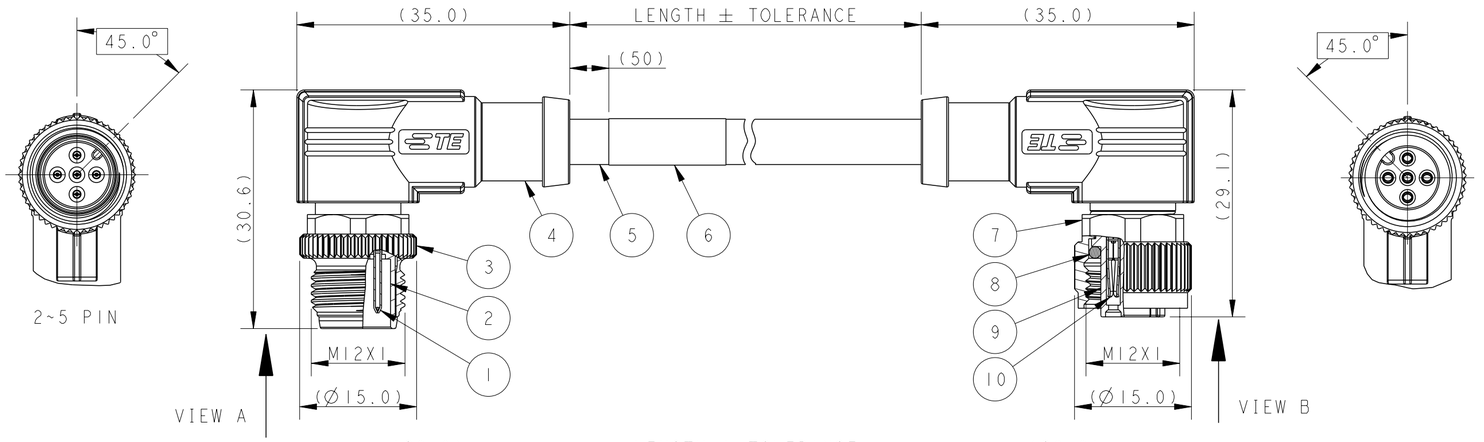

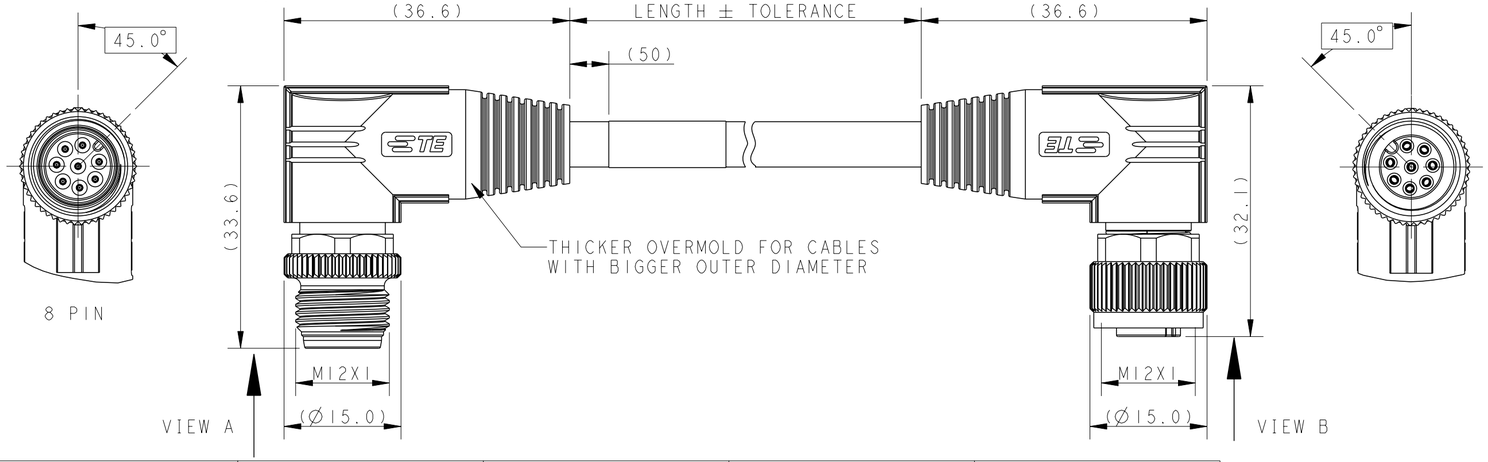

PN	T41622X4002-XXX	T41622X4003-XXX	T41622X4004-XXX	T41622X4005-XXX	T41622X4008-XXX
VIEW A	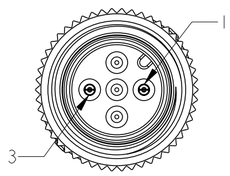	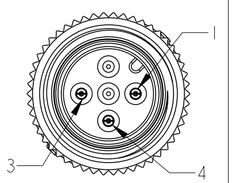	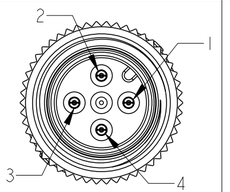	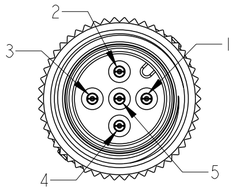	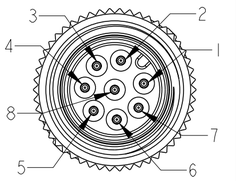
VIEW B	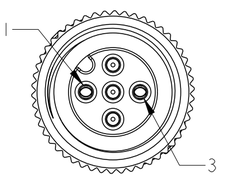	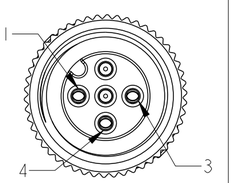	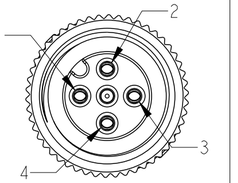	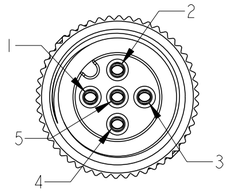	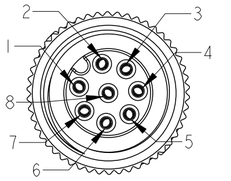
WIRING DIAGRAM	PIN / WIRE	PIN / WIRE	PIN / WIRE	PIN / WIRE	PIN / WIRE
	1 BROWN	1 BROWN	1 BROWN	1 BROWN	1 WHITE
	2 ---	2 ---	2 WHITE	2 WHITE	2 BROWN
	3 BLUE	3 BLUE	3 BLUE	3 BLUE	3 GREEN
	4 ---	4 BLACK	4 BLACK	4 BLACK	4 YELLOW
	5 ---	5 ---	5 ---	5 GREY	5 GREY
					6 PINK
					7 BLUE
					8 RED
STANDARD	CODING REQUIRED TO IEC 61076-2-101				

ITEM	DESCRIPTION	MATERIAL	OTHERS
1	MALE CONTACT	COPPER ALLOY	FLASH GOLD
2	MALE HOUSING	NYLON	BLACK
3	MALE NUT	COPPER ALLOY	NICKEL PLATED
4	OVER-MOLDING	POLYURETHANE	BLUE
5	CABLE	1=PVC 2=PUR	PVC:BLACK PUR:GRAY
6	LABEL	-	-
7	FEMALE NUT	COPPER ALLOY	NICKEL PLATED
8	O-RING	SILICONE	GRAY
9	FEMALE HOUSING	NYLON	BLACK
10	FEMALE CONTACT	COPPER ALLOY	FLASH GOLD

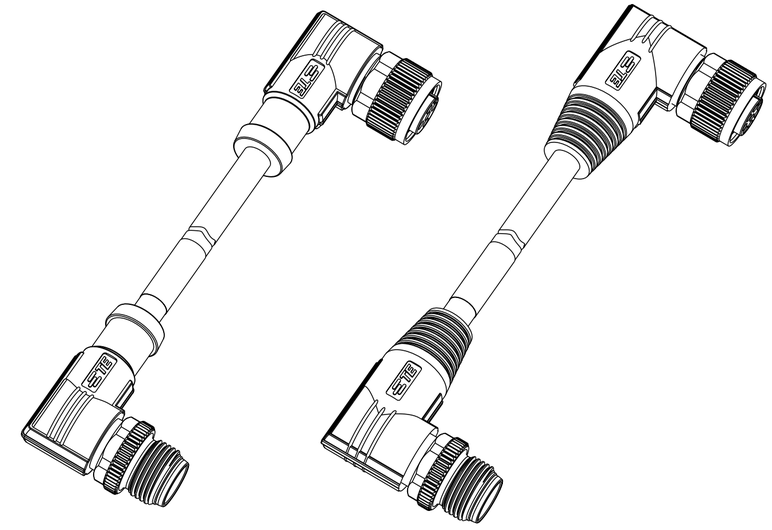

TECHNICAL DATA	T41622X4002-XXX	T41622X4003-XXX	T41622X4004-XXX	T41622X4005-XXX	T41622X4008-XXX
RATED VOLTAGE	250V			60V	30V
RATED IMPULSE VOLTAGE	2500V			1500V	800V
RATED CURRENT	4A				2A
POLLUTION DEGREE	3				
OVERVOLTAGE CATEGORY	II				
MATERIAL GROUP	II				
DEGREE OF PROTECTION	IP67				

THIS DRAWING IS A CONTROLLED DOCUMENT.

DIMENSIONS: mm

TOLERANCES UNLESS OTHERWISE SPECIFIED:
0 PLC ±-
1 PLC ±-
2 PLC ±-
3 PLC ±-
4 PLC ±-
ANGLES ±-

MATERIAL -
-

FINISH -
-

DWN BLAZE PENG 10APR2021
CHK KEVIN HUANG 10APR2021
APVD CHRIS WANG 10APR2021
PRODUCT SPEC 108-106140
APPLICATION SPEC 114-137144
WEIGHT -

ENTRELEC
Electrical Solutions

NAME MI2 CABLE ASSEMBLY DOUBLE END SHIELDED

SIZE	CAGE CODE	DRAWING NO	RESTRICTED TO
A2	00779	C-1SET311C04R0000	-

CUSTOMER DRAWING | SCALE 1:1 | SHEET 4 OF 5 | REV A

1471-9 (3/13)

Downloaded from Arrow.com.

THIS DRAWING IS UNPUBLISHED. 2021 TE Connectivity. All Rights Reserved.
RELEASED FOR PUBLICATION
© COPYRIGHT ALL RIGHTS RESERVED.

REVISIONS					
P	LTR	DESCRIPTION	DATE	DWN	APVD
		SEE SHEET 1			

TE MATERIAL NO. - NUMERICAL CODE

T 4 1 6 2 X X 0 0 X X - X X X

- CATEGORY: T41=MI2XI SENSOR/ACTUATOR
- APPLICATION TYPE: 6=SHIELDED
- SHAPE TYPE: 2=DOUBLE ENDED
- CONNECTOR TYPE FOR SINGLE END: 1=PLUG MALE STRAIGHT; 2=PLUG MALE R/A
- CABLE TYPE:SEE TABLE 1=PVC; 2=PUR
- CONNECTOR TYPE FOR DOUBLE END: 3=RECEPTACLE FEMALE STRAIGHT; 4=RECEPTACLE FEMALE R/A
- CODE TYPE: 0=A CODE
- POSITION: 02=2P; 03=3P; 04=4P; 05=5P; 08=8P
- CABLE LENGTH: STANDARD: -001:0.5M; -002:1.0M; -003:1.5M; -004:3.0M; -005:5.0M; -006:7.0M; -007:10.0M; CUSTOMIZATION: -XXX:XX.XM(>1.0M) E.G.:-155:15.5M, -200:20.0M; -99X: 0.XM(<1.0M) E.G.:-992:0.2M, -998:0.8M

TE MATERIAL NO. - DESCRIPTION CODE

M12 - XX - XP - M12 - XX - PXX - ** - SH

- CONNECTOR A: MI2XI A-CODE SENSOR/ACTUATOR
- CONNECTOR TYPE: MS=MALE STRAIGHT; MR=MALE RIGHT ANGLE
- POSITION: 2P; 3P; 4P; 5P; 8P
- CONNECTOR B: MI2XI A-CODE SENSOR/ACTUATOR
- CONNECTOR TYPE: FS=FEMALE STRAIGHT; FR=FEMALE RIGHT ANGLE
- CABLE TYPE: PVC; PUR
- CABLE LENGTH: 0.5:0.5M, 1.0:1.0M, 1.5:1.5M, 3.0:3.0M, 5.0:5.0M, 7.0:7.0M, 10.0:10.0M, ...
- APPLICATION TYPE: SH=SHIELDED

CABLE INFORMATION

CABLE TYPE	NO. OF WIRES	CROSS SECTION	CABLE JACKET	UL	FIXED:TEMP.	FLEXIBLE:TEMP.
1	2/3/4/5	0.34mm²	PVC BLACK	UL2464	-10°C~+80°C	-5°C~+80°C
1	8	0.25mm²	PVC BLACK	UL2464	-10°C~+80°C	-5°C~+80°C
2	2/3/4/5	0.34mm²	PUR GREY	UL20549	-40°C~+80°C	-25°C~+80°C
2	8	0.25mm²	PUR GREY	UL20549	-40°C~+80°C	-25°C~+80°C

CABLE LENGTH TOLERANCE

OVER	UP TO AND INCLUDING	TOLERANCES
0	1000mm	±30mm
1000mm	4000mm	±50mm
4000mm	5000mm	±60mm
5000mm	10000mm	±80mm
10000mm	>	±1.5% OF CABLE LENGTH

NOTE:
1. CODE POSITION INDICATOR
2. RECOMMENDED TORQUE 0.6 Nm
3. CABLE ASSEMBLY TO BE PACKAGED IN POLYBAGS
4. LABEL CONTAINS: PN, DATE CODE...

PART LIST

PRODUCT TYPE	TE PN	ENTRELEC PN
MI2-MS-4P-MI2-FS-PUR-1.0-SH	T4162123004-002	ISET314367R0000
MI2-MS-4P-MI2-FS-PUR-3.0-SH	T4162123004-004	ISET314369R0000
MI2-MS-4P-MI2-FS-PUR-5.0-SH	T4162123004-005	ISET314370R0000
MI2-MS-5P-MI2-FS-PUR-1.0-SH	T4162123005-002	ISET314374R0000
MI2-MS-5P-MI2-FS-PUR-3.0-SH	T4162123005-004	ISET314376R0000
MI2-MS-5P-MI2-FS-PUR-5.0-SH	T4162123005-005	ISET314377R0000
MI2-MS-4P-MI2-FR-PUR-1.0-SH	T4162124004-002	ISET314402R0000
MI2-MS-4P-MI2-FR-PUR-3.0-SH	T4162124004-004	ISET314404R0000
MI2-MS-4P-MI2-FR-PUR-5.0-SH	T4162124004-005	ISET314405R0000
MI2-MS-5P-MI2-FR-PUR-1.0-SH	T4162124005-002	ISET314409R0000
MI2-MS-5P-MI2-FR-PUR-3.0-SH	T4162124005-004	ISET31441IR0000
MI2-MS-5P-MI2-FR-PUR-5.0-SH	T4162124005-005	ISET31441 2R0000
MI2-MR-4P-MI2-FS-PUR-1.0-SH	T4162223004-002	ISET314507R0000
MI2-MR-4P-MI2-FS-PUR-3.0-SH	T4162223004-004	ISET314509R0000
MI2-MR-4P-MI2-FS-PUR-5.0-SH	T4162223004-005	ISET31451 0R0000
MI2-MR-5P-MI2-FS-PUR-1.0-SH	T4162223005-002	ISET31451 4R0000
MI2-MR-5P-MI2-FS-PUR-3.0-SH	T4162223005-004	ISET31451 6R0000
MI2-MR-5P-MI2-FS-PUR-5.0-SH	T4162223005-005	ISET31451 7R0000
MI2-MR-4P-MI2-FR-PUR-1.0-SH	T4162224004-002	ISET314542R0000
MI2-MR-4P-MI2-FR-PUR-3.0-SH	T4162224004-004	ISET314544R0000
MI2-MR-4P-MI2-FR-PUR-5.0-SH	T4162224004-005	ISET314545R0000
MI2-MR-5P-MI2-FR-PUR-1.0-SH	T4162224005-002	ISET314549R0000
MI2-MR-5P-MI2-FR-PUR-3.0-SH	T4162224005-004	ISET31455IR0000
MI2-MR-5P-MI2-FR-PUR-5.0-SH	T4162224005-005	ISET314552R0000

THIS DRAWING IS A CONTROLLED DOCUMENT.

DIMENSIONS: mm

TOLERANCES UNLESS OTHERWISE SPECIFIED: 0 PLC ±-; 1 PLC ±-; 2 PLC ±-; 3 PLC ±-; 4 PLC ±-; ANGLES ±-

MATERIAL -

FINISH -

DWN	BLAZE PENG	10APR2021
CHK	KEVIN HUANG	10APR2021
APVD	CHRIS WANG	10APR2021
PRODUCT SPEC	108-106140	
APPLICATION SPEC	114-137144	
WEIGHT	-	

ENTRELEC Electrical Solutions

NAME: MI2 CABLE ASSEMBLY DOUBLE END SHIELDED

SIZE	CAGE CODE	DRAWING NO	RESTRICTED TO
A2	00779	C-ISET311C04R0000	-

CUSTOMER DRAWING | SCALE 1:1 | SHEET 5 OF 5 | REV A

1471-9 (3/13)

Downloaded from Arrow.com.