REVISIONS					
REV	ECO	DESCRIPTION	DATE	BY	APPR
A3	-	RELEASE NEW DWG FORMAT	30/JUN/13	DRP	-
A4	-	LOOSE PIECE FORMAT	15/MAY/24	CJF	-
A5	-	ADDED NOTE 9	09/DEC/25	CJF	-

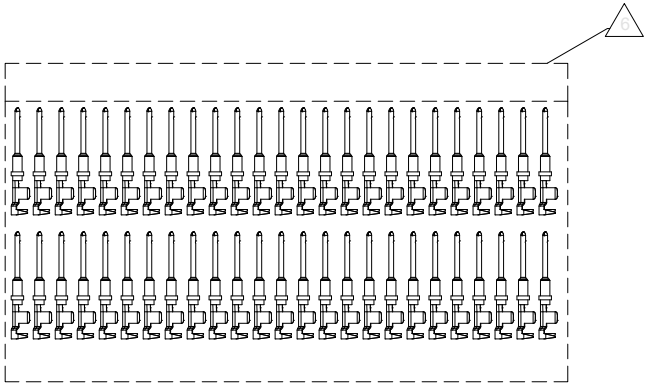

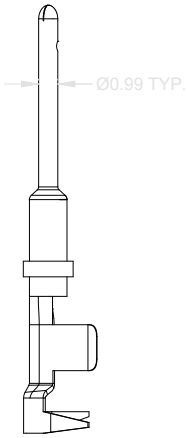

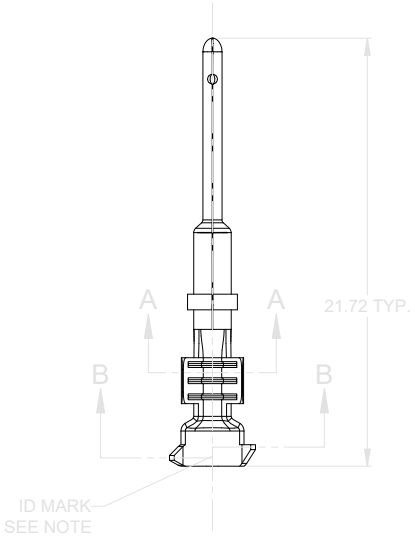

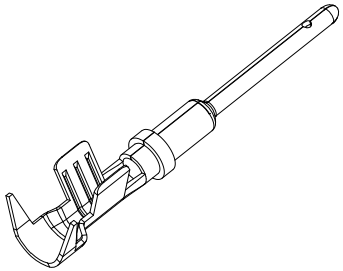

NOTES: UNLESS OTHERWISE SPECIFIED

1. MATERIAL: COPPER ALLOY

2. PLATING: SEE PART NUMBER CHART

3. CONTACT SIZE: 20

4. SPECIFICATIONS:
   4.1 CURRENT RATING: 7.5 AMPS
   4.2 CONTACT MILLIVOLT DROP: 100 MILLIVOLT DROP MAXIMUM AT 7.5 AMP TEST CURRENT.
   4.3 RoHS COMPLIANT

5. RECOMMENDED WIRE RANGE: 16 - 22 AWG

6. PACKAGE: 50 PCS PER BAG

7. AVAILABLE HAND TOOL: ATT-20-00

8. ALL DIMENSIONS ARE FOR REFERENCE USE ONLY

9. ID MARK PRESENT OR NOT DETERMINES MANUFACTURE

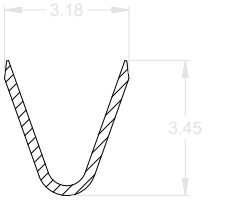

SECTION A-A

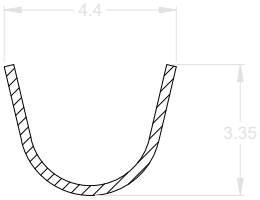

SECTION B-B

PART NUMBER CHART	
PLATING	PART NUMBER
NICKEL	AT60-20-0122-LP
GOLD	AT60-20-0144-LP

	SEE PART NUMBER CHART	
	PART NUMBER	DESCRIPTION	ITEM
QUANTITY	MATERIALS LIST	

UNLESS OTHERWISE SPECIFIED
1) All dimensions are in metric(mm).
2) Tolerances are as follows:
1 PL DEC ±0.30
2 PL DEC ±0.15
3 PL DEC ±0.08
Fractions ±1/64
Angles ±1°
3) Note reference = X

MATERIAL SPECIFICATIONS:

PROCESS SPECIFICATIONS:

NEXT ASS'Y:

SIGNATURES		DATE
DRAWN:	D.PARKS	30/JUN/13
CHECKED:		
ENGINEER:		
APPROVAL:		
CUSTOMER:		

THIS DRAWING IS SUPPLIED FOR INFORMATION ONLY. DESIGN FEATURES, SPECIFICATIONS AND PERFORMANCE DATA SHOWN HEREON ARE THE PROPERTY OF THE AMPHENOL CORPORATION. NO RIGHTS OF REPRODUCTION ARE IMPLIED. ALL DIMENSIONS ARE SUBJECT TO NORMAL MANUFACTURING VARIATIONS.

Amphenol
Sine Systems - www.amphenol-sine.com
44724 Morley Drive
Clinton Township, MI 48036

CONTACT, PIN, STAMPED, 50PCS BAGGED
SIZE 20, 16-22 AWG

SIZE	TYPE	DWG NO:	REVISION
B	C-	AT60-20-01XX-LP	A5

SCALE: NONE SHEET 1 OF 1

TITLE: CONTACT, PIN, STAMPED, SIZE 20, 18&22 AWG, ATM SERIES
DWG NO: AT60-20-01XX
REV: A5
SH: 1
OF: 1

Downloaded from Arrow.com.