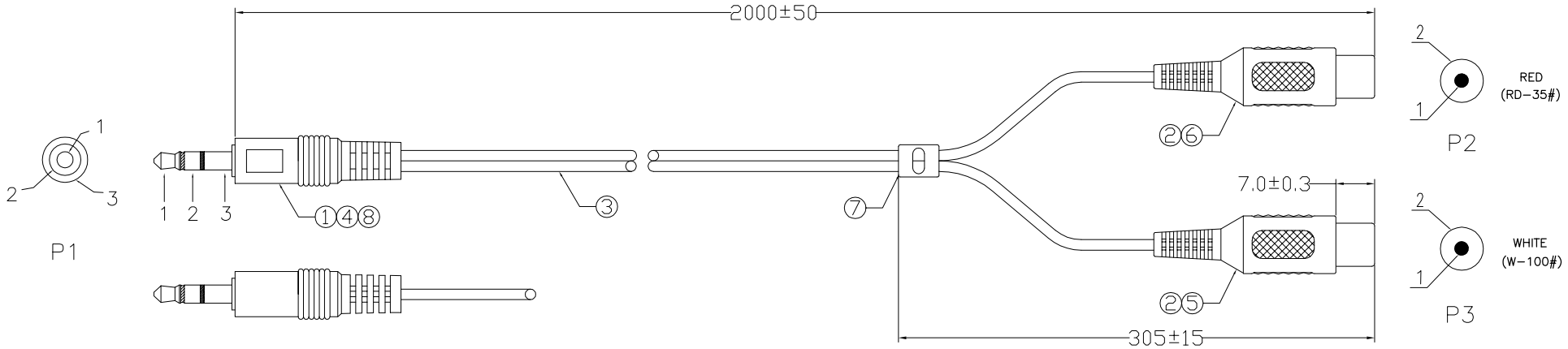

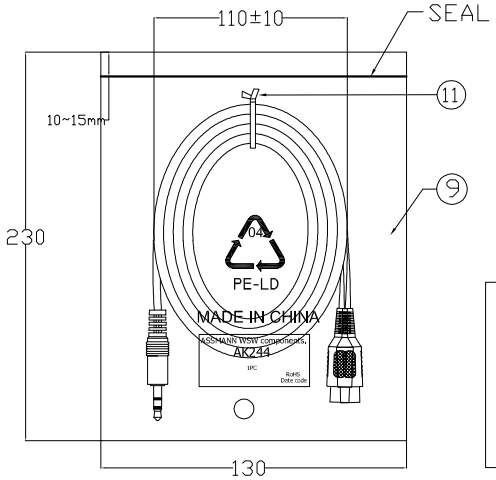

Electrical test:

1. 100% short,open,miss wire test
2. Conduct resistance:2 Ohm(max)
3. Insulation resistance:5 Mohm(min)
4. Dielectric test:DC 300V/10ms

PIN ASSIGNMENT:

P1	P2	P3	COLOR
1	1		RED
2		1	WHITE
3	2		SPIRAL(RED)
		2	SPIRAL(WHITE)

NO.	NAME	Q'TY	SPECIFICATION
⑪	TIE	1	BLACK L=80mm
⑩	PE BAG	1/10	CLEAR SIZE: 280*330*0.05mm PRINT BLACK"MADE IN CHINA"+"10PCS".
⑨	PE BAG	1	CLEAR SIZE: 130*230*0.05mm PRINT BLACK"MADE IN CHINA".
⑧	TUBE	1	HEAT SHRINK TUBE BLACK OD1.5*L10mm.
⑦	S/R	1.5g	BLACK PVC 40P (Mould NO.:SR-048)
⑥	OUT JACKET	3.3g	PVC-40P RED(RD-35),(Mould NO.WM-042)
⑤	OUT JACKET	3.3g	PVC-40P WHITE(W-100)(Mould NO.WM-042)
④	OUT JACKET	3.0g	BLACK PVC-40P (Mould NO.:WM-020)
③	CABLE	1	NOUL 28#(10/0.10+28/0.10)*2F JACKET BLACK OD2.8*5.6mm L=2000±10MM
②	CONN	2	RCA PLUG FEMALE NI-PLATED INSULATOR COLOR:BROWN
①	CONN	1	3.5ST MALE NI-PLATED Tray6.0mm L=26mm MOLD TYPE NI-PLATED INSULATOR COLOR:BLACK

RoHS compliant

Unit: mm

Scale	Free
TOLERANCE	
DIM	TOL
Angle	TOL

Id.	Modification	Date	Name
⓪	Drawn	20.02.2017	Amy

	Date	Name
Drawn	20.02.2017	Amy
Approved	20.02.2017	Amy

ASSMANN WSW components

Customer-No.

ASSMANN WSW-No. AK244

Drawing-No. ASS 7889 CA

rev00

Replace

Sheet

Downloaded from Arrow.com.