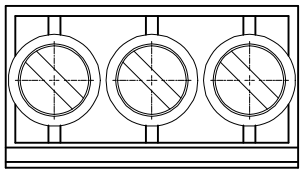

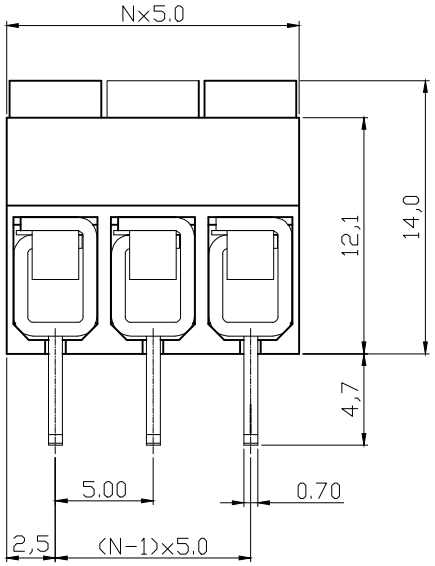

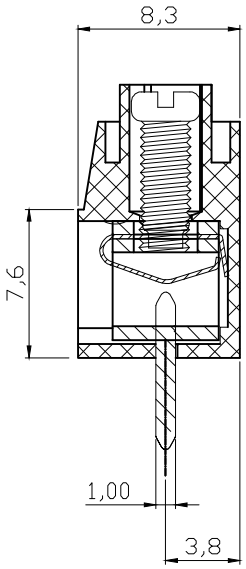

N= NUMBER OF CONCATS

P.C.B LAYOUT

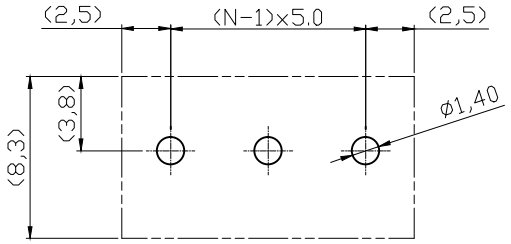

Material
1.Terminal body
(metal housing): Brass stamped
2.Terminal screw:Steel Zinc plating"-"slot type
3.Wire guard:Stainless steel
4.Surface of solder tail:Tin plated
5.Insulator (housing): Thermoplastic (UL94V-0), Grey

Electrical UL/ cUL
1.Voltage rating: 300VAC/250VAC
2.Current rating: 10A/15A
3.Wire range:
4.Solid wire(AWG): 12-22/12-20
5.Stranded wire(AWG):12-22/12-20
6.Torque(Lb-In): 3.5
7.Screw:M2.5
8.Wire strip length:6-7mm
9.Withstanding Voltage: 1.6KV/1.5KV
10.Operating temperature: -30°C to +105°C
11.Soldering temperature: 250°C±10°C/5 Sec
12.Safety Approval:

RoHS compliant
Unit: mm

② File No.: E349947

Scale	1:1						Date	Name
TOLERANCE						Drawn	12.05.2009	Dean
X.	±0.50					Approved	18.04.2016	Joanna
X.X	±0.30							
X.XX	±0.10							
DIM	TOL	②	Add UL	18.04.2016	Joanna			
X.°	±1°	①	Drawn	12.05.2009	Dean			
Angle	TOL	Id.	Modification	Date	Name			

Customer-No.

ASSMANN WSW-No.
A-TB500-TKxxSB

Drawing-No.
ASS 3513 CO

rev02

Replace

Sheet

ASSMANN WSW components

SV1490

Downloaded from Arrow.com.