Data Sheet | Item Number: 236-402

PCB terminal block; 2.5 mm²; Pin spacing 5/5.08 mm; 2-pole; CAGE CLAMP®; commoning option; gray

https://www.wago.com/236-402

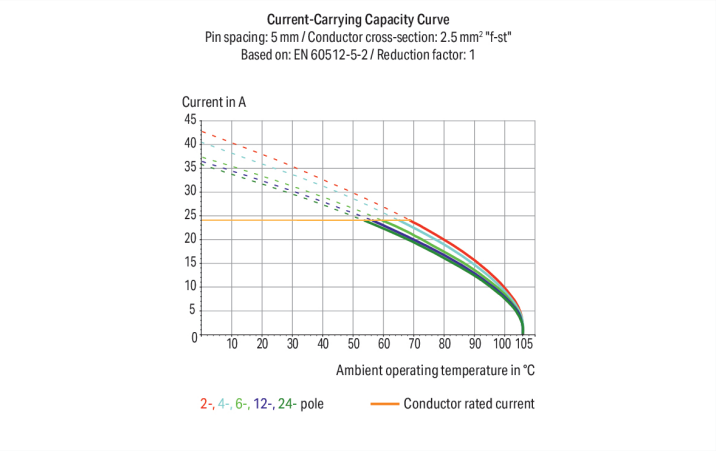

Color: gray

Similar to illustration

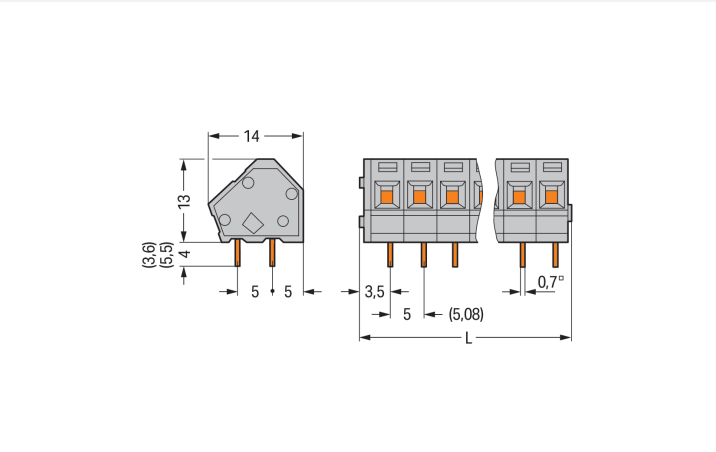

Dimensions in mm
L = (pole no. x pin spacing) + 2.3 mm

PCB terminal block, 236 Series, solder pin dimensions 0.7 x 0.7 mm

Our PCB terminal block (item number 236-402) is designed for seamless electrical installations. You can rely on proven safety with these PCB terminal blocks, perfect for a host of applications when designing your devices. Conductors should only be connected to this PCB terminal block if their strip length is between 5 and 6 mm . This product features one conductor terminal and utilizes CAGE CLAMP®. Our highly-rated and maintenance-free CAGE CLAMP® connection makes it easy to connect all conductor types without having to prepare the conductor. For example, you don't need to crimp ferrules. The item's dimensions are (12.3 x 17 x 14) mm (width x height x depth). This PCB terminal block is suitable for conductor cross-sections ranging from 0.08 mm² to 2.5 mm².

CAGE CLAMP® – the industry standard for connection technology

Tin is used for coating the contact surfaces. This PCB terminal block is operated with an operating tool. The PCB terminal block is designed for THT soldering. The conductor is designed to be inserted into the board at a 45° angle..

- Safe and fast installation
- Reliable soldering thanks to THT
- Compact sizes
- Actuation via operating tool
- Pin spacing: 5 mm

Downloaded from Arrow.com.

Notes

Variants:	Other pole numbers Versions for Ex e II and Ex i Other colors Mixed-color PCB connector strips Direct marking Solder pin length: 3.6 mm Solder pin length: 5.5 mm Other versions (or variants) can be requested from WAGO Sales or configured at https://configurator.wago.com/.

Electrical data

Ratings per	IEC/EN 60664-1		
Overvoltage category	III	III	II
Pollution degree	3	2	2
Nominal voltage	250 V	320 V	630 V
Rated impulse withstand voltage	4 kV	4 kV	4 kV
Rated current	24 A	24 A	24 A

Approvals per	CSA		
Use group	B	C	D
Rated voltage	300 V	-	300 V
Rated current	15 A	-	10 A

Approvals per	UL 1059		
Use group	B	C	D
Rated voltage	300 V	-	300 V
Rated current	15 A	-	10 A

Connection Data

Clamping units	2
Total number of potentials	2
Number of connection types	1
Number of levels	1

Connection 1	
Connection technology	CAGE CLAMP®
Actuation type	Operating tool
Solid conductor	0.08 … 2.5 mm² / 28 … 12 AWG
Fine-stranded conductor	0.08 … 2.5 mm² / 28 … 12 AWG
Fine-stranded conductor; with insulated ferrule	0.25 … 1.5 mm²
Fine-stranded conductor; with uninsulated ferrule	0.25 … 1.5 mm²
Note (conductor cross-section)	12 AWG: THHN, THWN
Strip length	5 … 6 mm / 0.2 … 0.24 inches
Conductor connection direction to PCB	45 °
Pole number	2

Physical data

Pin spacing	5/5.08 mm / 0.197/0.2 inches
Width	12.3 mm / 0.484 inches
Height	17 mm / 0.669 inches
Height from the surface	13 mm / 0.512 inches
Depth	14 mm / 0.551 inches
Solder pin length	4 mm
Solder pin dimensions	0.7 x 0.7 mm
Drilled hole diameter	1.1 $^{(+0.1)}$ mm

Downloaded from Arrow.com.

PCB contact

PCB contact	THT
Solder pin arrangement	over the entire terminal strip (in-line)
Number of solder pins per potential	2

Material data

Note (material data)	Information on material specifications can be found here
Color	gray
Material group	I
Insulation material (main housing)	Polyamide (PA66)
Flammability class per UL94	V0
Clamping spring material	Chrome-nickel spring steel (CrNi)
Contact material	Electrolytic copper (E_{Cu})
Contact Plating	Tin
Fire load	0.026 MJ
Weight	1.9 g

Environmental requirements

Limit temperature range	-60 … +105 °C

Commercial data

Product Group	4 (Printed Circuit Connectors)
PU (SPU)	420 (105) pcs
Packaging type	Box
Country of origin	CH
GTIN	4044918768719
Customs tariff number	85369010000

Product Classification

UNSPSC	39121409
eCl@ss 10.0	27-44-04-01
eCl@ss 9.0	27-44-04-01
ETIM 9.0	EC002643
ETIM 10.0	EC002643
ECCN	NO US CLASSIFICATION

Environmental Product Compliance

RoHS Compliance Status	Compliant,No Exemption

Approvals / Certificates

General approvals

Approval	Standard	Certificate Name
CCA DEKRA Certification B.V.	EN 60947	2160584.25
CCA DEKRA Certification B.V.	EN 60947	NTR NL-7109
CCA DEKRA Certification B.V.	EN 60998	NTR NL-7195

General approvals

CSA DEKRA Certification B.V.	C22.2 No. 158	1673957
UL Underwriters Laboratories Inc.	UL 1059	UL-US-2406095-1

Downloaded from Arrow.com.

Declarations of conformity and manufacturer's declarations

Approval	Standard	Certificate Name
EU-Declaration of Conformity WAGO GmbH & Co. KG	-	-
UK-Declaration of Conformity WAGO GmbH & Co. KG	-	-

Approvals for marine applications

Approval	Standard	Certificate Name
BV Bureau Veritas S.A.	IEC 60998	11915/E0 BV

Downloads

Environmental Product Compliance

Compliance Search

Environmental Product Compliance 236-402

Documentation

Additional Information

Technical Section	03.04.2019	pdf 2027.26 KB	
Gebrückte Klemmenleisten für Leiterplatten		pdf 303.71 KB	

CAD/CAE-Data

CAD data

2D/3D Models 236-402

CAE data

EPLAN Data Portal 236-402

ZUKEN Portal 236-402

PCB Design

Symbol and Footprint via SamacSys 236-402

Symbol and Footprint via Ultra Librarian 236-402

Downloaded from Arrow.com.

1 Compatible Products

1.1 Optional Accessories

1.1.1 Ferrule

1.1.1.1 Ferrule

Item No.: 216-321
Ferrule; Sleeve for 0.25 mm² / AWG 24; insulated; electro-tin plated; yellow

Item No.: 216-151
Ferrule; Sleeve for 0.25 mm² / AWG 24; uninsulated; electro-tin plated; silver-colored

Item No.: 216-322
Ferrule; Sleeve for 0.34 mm² / 22 AWG; insulated; electro-tin plated; light turquoise

Item No.: 216-152
Ferrule; Sleeve for 0.34 mm² / 22 AWG; uninsulated; electro-tin plated; silver-colored

Item No.: 216-221
Ferrule; Sleeve for 0.5 mm² / 20 AWG; insulated; electro-tin plated; white

Item No.: 216-121
Ferrule; Sleeve for 0.5 mm² / AWG 22; uninsulated; electro-tin plated; silver-colored

Item No.: 216-222
Ferrule; Sleeve for 0.75 mm² / 18 AWG; insulated; electro-tin plated; gray

Item No.: 216-122
Ferrule; Sleeve for 0.75 mm² / 18 AWG; uninsulated; electro-tin plated; silver-colored

Item No.: 216-223
Ferrule; Sleeve for 1 mm² / AWG 18; insulated; electro-tin plated; red

Item No.: 216-123
Ferrule; Sleeve for 1 mm² / AWG 18; uninsulated; electro-tin plated; silver-colored

Item No.: 216-224
Ferrule; Sleeve for 1.5 mm² / AWG 16; insulated; electro-tin plated; black

Item No.: 216-124
Ferrule; Sleeve for 1.5 mm² / AWG 16; uninsulated; electro-tin plated

1.1.2 Marking

1.1.2.1 Marking strip

Item No.: 210-332/500-202
Marking strips; as a DIN A4 sheet; MARKED; 1-16 (160x); Height of marker strip: 3 mm; Strip length 182 mm; Horizontal marking; Self-adhesive; white

Item No.: 210-332/508-202
Marking strips; as a DIN A4 sheet; MARKED; 1-16 (160x); Height of marker strip: 3 mm; Strip length 182 mm; Horizontal marking; Self-adhesive; white

Item No.: 210-332/500-205
Marking strips; as a DIN A4 sheet; MARKED; 1-32 (80x); Height of marker strip: 3 mm; Strip length 182 mm; Horizontal marking; Self-adhesive; white

Item No.: 210-332/508-205
Marking strips; as a DIN A4 sheet; MARKED; 1-32 (80x); Height of marker strip: 3 mm; Strip length 182 mm; Horizontal marking; Self-adhesive; white

Item No.: 210-332/500-204
Marking strips; as a DIN A4 sheet; MARKED; 17-32 (160x); Height of marker strip: 3 mm; Strip length 182 mm; Horizontal marking; Self-adhesive; white

Item No.: 210-332/508-204
Marking strips; as a DIN A4 sheet; MARKED; 17-32 (160x); Height of marker strip: 3 mm; Strip length 182 mm; Horizontal marking; Self-adhesive; white

Item No.: 210-332/500-206
Marking strips; as a DIN A4 sheet; MARKED; 33-48 (160x); Height of marker strip: 3 mm; Strip length 182 mm; Horizontal marking; Self-adhesive; white

Item No.: 210-332/508-206
Marking strips; as a DIN A4 sheet; MARKED; 33-48 (160x); Height of marker strip: 3 mm; Strip length 182 mm; Horizontal marking; Self-adhesive; white

1.1.3 Stickers with operating instructions

1.1.3.1 Stickers with operating instructions

Item No.: 210-191
Stickers for operating instructions; for PCB terminal blocks; 236 Series

Downloaded from Arrow.com.

1.1.4 Test and measurement

1.1.4.1 Testing accessories

Item No.: 231-127
Testing plug module with contact stud; for 236 Series; Pin spacing 5 mm / 0.197 in; 2,50 mm²; gray

Item No.: 231-128
Testing plug module with contact stud; Pin spacing 5.08 mm / 0.2 in; 2,50 mm²; orange

1.1.5 Tool

1.1.5.1 Operating tool

Item No.: 210-658
Operating tool; Blade: 3.5 x 0.5 mm; with a partially insulated shaft; angled; short; multi-coloured

Item No.: 210-720
Operating tool; Blade: 3.5 x 0.5 mm; with a partially insulated shaft; multicoloured

Item No.: 210-657
Operating tool; Blade: 3.5 x 0.5 mm; with a partially insulated shaft; short; multi-coloured

Item No.: 236-335
Operating tool; gray

Item No.: 236-332
Operating tool; natural

Installation Notes

Conductor termination

Inserting a conductor via 3.5 mm screwdriver.
Screwdriver actuation parallel to conductor entry

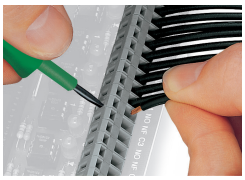

Inserting a conductor via 3.5 mm screwdriver.
Screwdriver actuation perpendicular to conductor entry

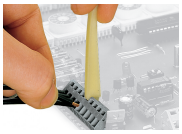

Inserting a conductor via operating tool.

Compared to standard screwdrivers, these operating tools are far more convenient for wiring PCB terminal strips at factory.

Installation

PCB Terminal Strips placed behind each other save space – staggering them by half the pin spacing simplifies subsequent wiring of the first row.

Downloaded from Arrow.com.

Installation

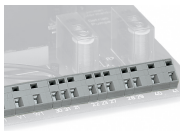

Combining PCB terminal blocks with different pin spacing.

Marking

Optional: Labeling via factory direct marking.

Optional: Labeling with self-adhesive marking strips possible

Downloaded from Arrow.com.