THE INFORMATION CONTAINED IN THIS DRAWING IS THE SOLE PROPERTY OF BUD INDUSTRIES INC. ANY REPRODUCTION IN PART OR WHOLE WITHOUT THE WRITTEN PERMISSION OF BUD INDUSTRIES INC. IS PROHIBITED.

DWG. NO.	SNC-3750
ISSUE	REVISIONS
A	REVISED DESIGN 6-30-08 DAB
B	PER ECN #10404 12-4-08 DAB
C	PER ECN #10446 1-13-09 BT

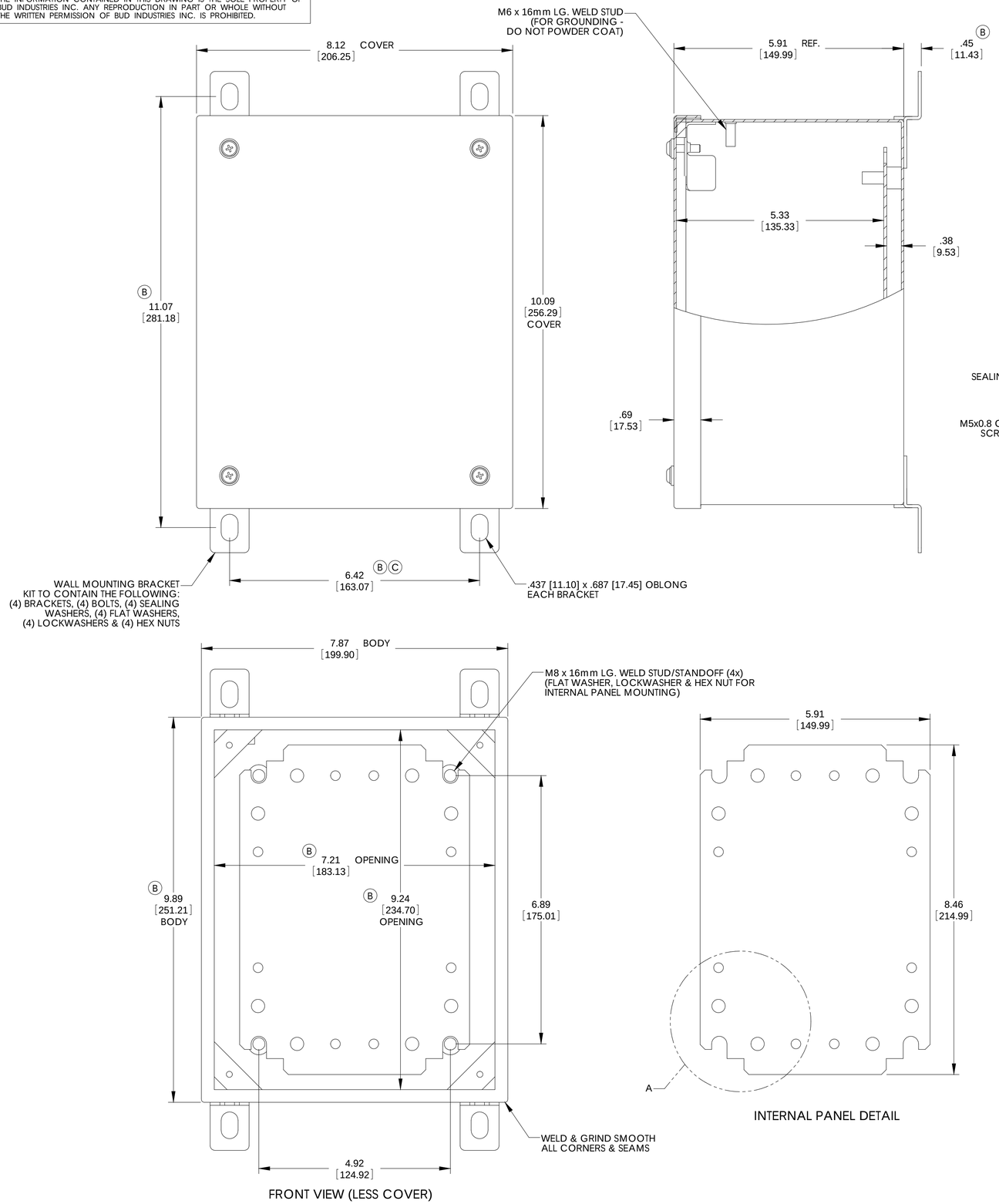

MATERIAL:
BODY, COVER MOUNTING BRACKETS, COVER - 16 GA. [1.5mm] C.R.S.
INTERNAL PANEL - 14 GA. [2.0mm] C.R.S.
WALL MOUNTING BRACKETS - 14 GA. [2.0mm] STAINLESS STEEL
HARDWARE - STAINLESS STEEL
GASKET - .25 [6.35] THICK NEOPRENE (BLACK) OR EQUIVALENT
SEALING WASHERS - BLACK NEOPRENE OR EQUIVALENT

FINISH:
BODY & COVER - LIGHT GRAY SMOOTH POWDER COAT
INTERNAL PANEL - ZINC CHROMATE
WALL MOUNTING BRACKETS - NATURAL

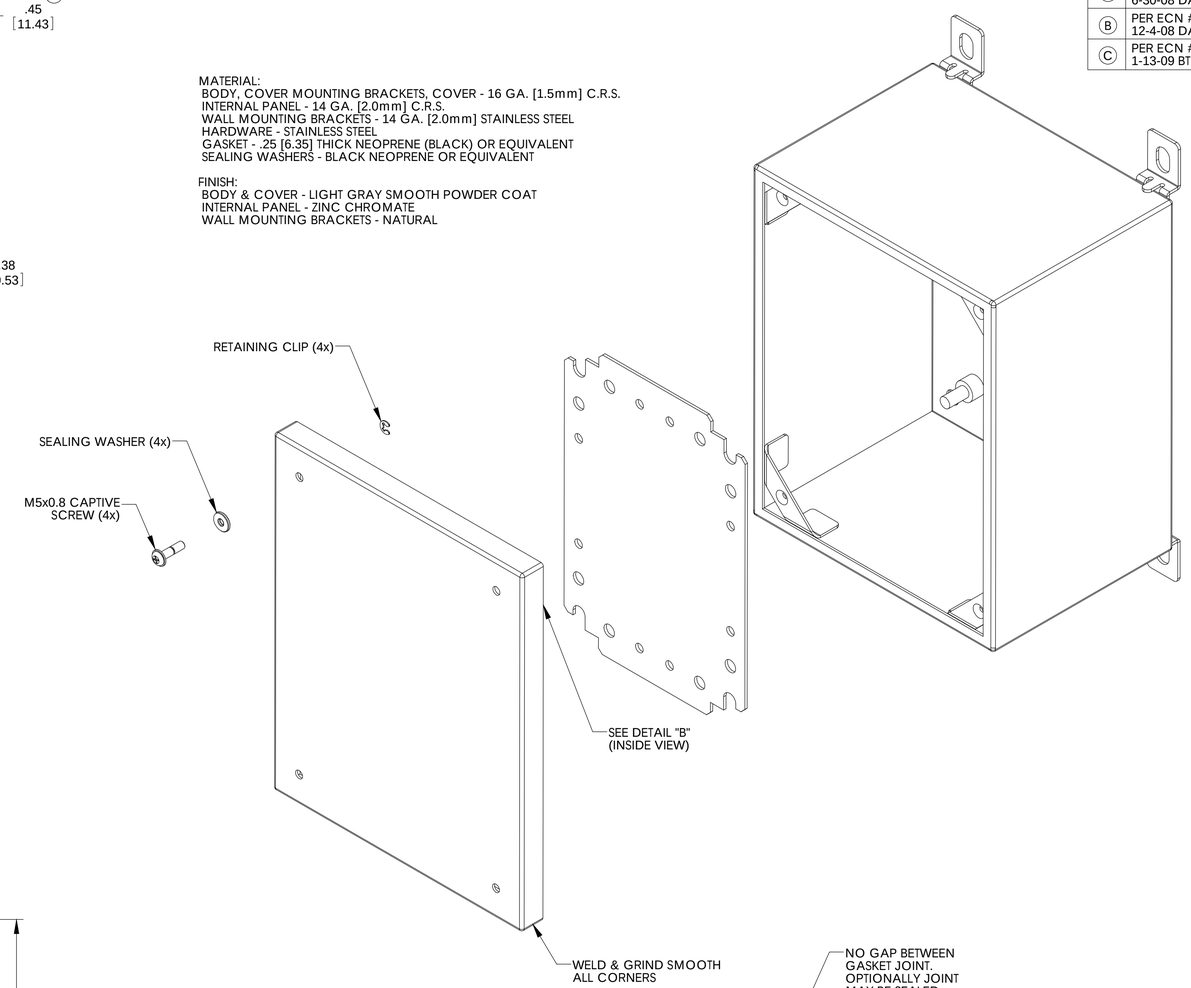

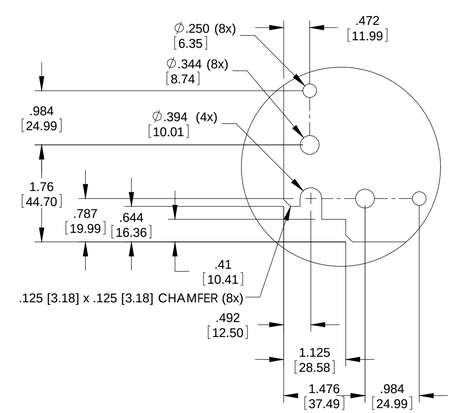

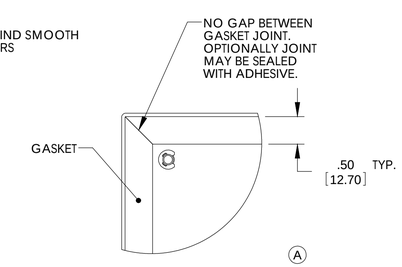

QTY.	USED ON

PARTS LIST

UNLESS OTHERWISE SPECIFIED ALL DIMENSIONS ARE IN INCHES [MILLIMETERS]
TOLERANCES: DECIMALS: XX ±.03 XXX ±.010

CAD GENERATED DRAWING. DO NOT MANUALLY UPDATE

APPROVALS	DATE
DRAWN DAB	5-5-08
CHECKED	
APPROVED	

MATERIAL: AS NOTED
FINISH: AS NOTED
DO NOT SCALE DRAWING

BUD INDUSTRIES INC.

NEMA SHEET METAL BOX w/LIFT-OFF SCREW COVER

SIZE D | DWG. NO. SNC-3750 | REV.
SCALE | CAD FILE: | SHEET 1 OF 1

Downloaded from Arrow.com.