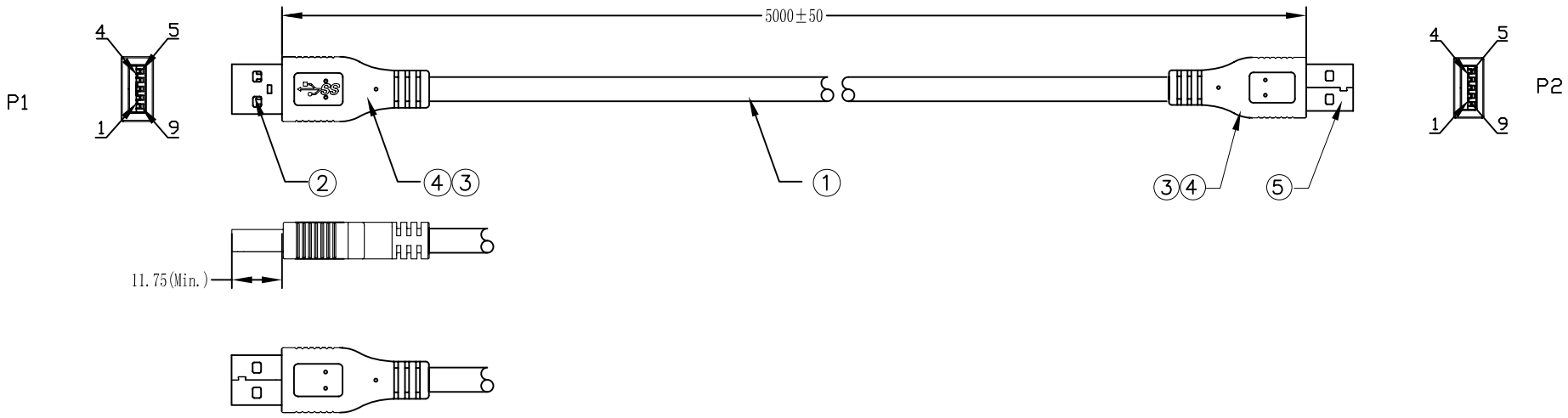

1.Wiring Diagram.

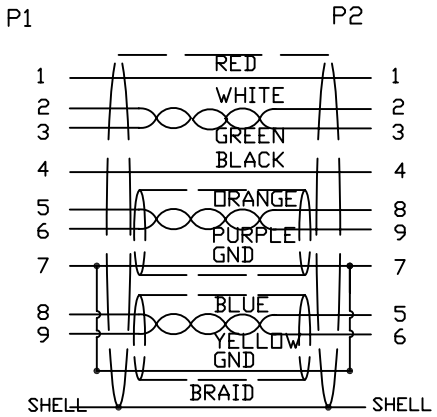

2.Cable test condition :

Open / Short : 100%

Insulation resistance : 5M ohms

Contact resistance : 2 ohm

Hipot : DC 300V / 1 sec

3.Each pcs with PE polybag.

NO.	PART NO.	DESCRIPTION	QTY	UNIT/REF
5	CONN	USB3.0 A MAILE G/F BLUE	1	P2
4	PVC	45P PVC BLACK OVERMOLD	25g	
3	PE	LLDPE 500026 6201	16g	
2	CONN	USB3.0 A/M G/F BLUE	1	P1
1	CABLE	《28AWG (7/0。127T) *1P+D(7/0.127T)+AL+M》*2+28AWG (7/0。127T) *1P+24AWG(7/0.2T)*2C+A+D+B (16/6/0.12AM) OD6.0 BLACK	1	5000mm

BILL OF MATERIAL

REV	ECN#	DESCRIPTION	DATE
A		INITAL RELEASE	2014/08/28

CnC Tech,LLC

P/N: 103-1020-BL-00500 REV A

TITLE: CABLE USB3.0 A/M TO A/M

DRAWN: WENC DATE: 08/24/14

CHECKED: EDWIN 08/24/14

APPROVAL

CUSTOMER P/N: REV A

CUSTOMER:

SHEET 1 OF 1

Downloaded from Arrow.com.