Overview

KEMET's Surface Mount Solid Polymer Aluminum Capacitors offer longer life and greater stability across a wide range of temperatures. This highly conductive solid polymer electrolyte eliminates the risk of drying out and, due to its low ESR properties, is able to withstand higher ripple currents during normal operation. This series is ideally suited for industrial and commercial applications.

Applications

Typical applications include mobile phone chargers, adapters (laptop power supplies), and medical equipment.

Benefits

- Surface mount form factor
- Ultra low impedance
- High ripple current
- Long life
- 105°C/5,000 hours
- RoHS compliant
- Halogen-free



Part Number System

A	766	EB	157	M	0G	LA	E	022
Capacitor Class	Series	Size Code	Capacitance Code (pF)	Tolerance	Rated Voltage (VDC)	Packaging	Electrical Parameters	ESR
A = Aluminum	Surface Mount Solid Polymer Aluminum Capacitors 105°C 5,000 hours Long Life	See Dimension Table	First two digits represent significant figures for capacitance values. Last digit specifies the number of zeros to be added.	M = ±20%	4 = 0G 6.3 = 0J 10 = 1A 16 = 1C 20 = 1D 25 = 1E	LA = Tape & Reel	E = Standard/ESR	Last 3 digits represent significant figures for ESR values. (mΩ)

Downloaded from Arrow.com.

Ordering Options Table

Packaging Type	Packaging Code
Standard Packaging Options	
Tape & Reel	LA
Contact KEMET for other Lead and Packaging options	

Dimensions – Millimeters

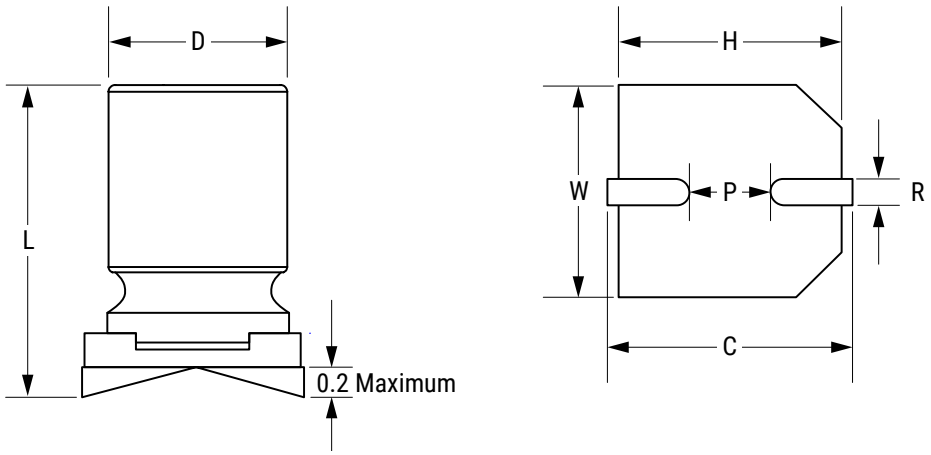

Size Code	D		L		W		H		C		R	P
	Nominal	Tolerance	Nominal	Tolerance	Nominal	Tolerance	Nominal	Tolerance	Nominal	Tolerance		Nominal
EB	6.3	±0.5	5.7	±0.3	6.6	±0.2	6.6	±0.2	7.3	±0.2	0.5 – 0.8	2.0
KE	8	±0.5	6.7	±0.3	8.3	±0.2	8.3	±0.2	9	±0.2	0.5 – 0.8	3.1
KS	8	±0.5	12.2	±0.3	8.3	±0.2	8.3	±0.2	9	±0.2	0.8 – 1.1	3.1

Downloaded from Arrow.com.

Environmental Compliance



All Part Numbers in this datasheet are Reach and RoHS compliant, and Halogen-Free.

As an environmentally conscious company, KEMET is working continuously with improvements concerning the environmental effects of both our capacitors and their production. In Europe (RoHS Directive) and in some other geographical areas like China, legislation has been put in place to prevent the use of some hazardous materials, such as lead (Pb), in electronic equipment. All products in this catalog are produced to help our customers' obligations to guarantee their products and fulfill these legislative requirements. The only material of concern in our products has been lead (Pb), which has been removed from all designs to fulfill the requirement of containing less than 0.1% of lead in any homogeneous material. KEMET will closely follow any changes in legislation worldwide and make any necessary changes in its products, whenever needed.

Some customer segments such as medical, military and automotive electronics may still require the use of lead in electrode coatings. To clarify the situation and distinguish products from each other, a special symbol is used on the packaging labels for RoHS compatible capacitors.

Due to customer requirements, there may appear additional markings such as LF = Lead-free or LFW = Lead-free wires on the label.

Performance Characteristics

Item	Performance Characteristics
Capacitance Range	10 – 560 µF
Rated Voltage	4 – 25 VDC
Operating Temperature	−55°C to +105°C
Capacitance Tolerance	±20% at 120 Hz/20°C
Life Test	5,000 hours (see conditions in Test Method & Performance)
Leakage Current	≤ Specified Value
	C = Rated capacitance (µF), V = Rated voltage (VDC), Voltage applied for 2 minutes at 20°C.

Compensation Factor of Ripple Current (RC) vs. Frequency

Frequency	120 Hz ≤ f < 1 kHz	1 kHz ≤ f < 10 kHz	10 kHz ≤ f < 100 kHz	100 kHz ≤ f < 500 kHz
Coefficient	0.05	0.30	0.70	1.00

Downloaded from Arrow.com.

Test Method & Performance

Conditions	Load Life Test	Shelf Life Test
Temperature	105°C	105°C
Test Duration	5,000 hours	168 hours
Ripple Current	No ripple current applied	No ripple current applied
Voltage	The sum of DC voltage and the peak AC voltage must not exceed the rated voltage of the capacitor	No voltage applied
Performance	**The following specifications will be satisfied when the capacitor is restored to 20°C.**	
Capacitance Change	Within ±20% of the initial value	
Dissipation Factor	Does not exceed 150% of the specified value	
ESR	Does not exceed 150% of the specified value	
Leakage Current	Does not exceed specified value	
Damp Heat	**The following specifications will be satisfied when the capacitor is restored to 20°C after application of rated voltage for 1,000 hours at 60°C, 90%~95% RH.**	
Capacitance Change	Within ±20% of the initial value	
Dissipation Factor	Does not exceed 150% of the specified value	
ESR	Does not exceed 150% of the specified value	
Leakage Current	Does not exceed specified value	
Surge Voltage (Rated Voltage x 1.15(V))	**The following specifications will be satisfied when the capacitor is subjected to 1,000 cycles, each consisting of charge with the surge voltages specified at 105°C for 30 seconds through a protective resistor (Rc = 1 kΩ) and discharge for 5 minutes, 30 seconds.**	
Capacitance Change	Within ±20% of the initial value	
Dissipation Factor	Does not exceed 150% of the specified value	
ESR	Does not exceed 150% of the specified value	
Leakage Current	Does not exceed specified value	
Resistance to Soldering Heat	**Measurement for solder temperature profile at capacitor top and terminal.**	
Capacitance Change	Within ±10% of the initial value	
Dissipation Factor	Does not exceed 130% of the specified value	
ESR	Does not exceed 130% of the specified value	
Leakage Current	Does not exceed specified value	

Downloaded from Arrow.com.

Shelf Life & Re-Ageing

Shelf Life
Solderability is 12 months after manufacturing date.

The capacitance, ESR and impedance of a capacitor will not change significantly after extended storage periods, however the leakage current will slowly increase.

• This series should not be stored in high temperatures or where there is a high level of humidity.
• The suitable storage condition is +5 to +35°C and less than 75% in relative humidity.
• Do not store in damp conditions such as water, saltwater spray or oil spray.
• Do not store in an environment of hazardous gas (hydrogen sulphide, sulphurous acid gas, nitrous acid, chlorine gas, ammonium, etc.)
•Do not store under exposure to ozone, ultraviolet rays or radiation.

If a capacitor has been stored for more than 12 months under these conditions and it shows increased leakage current, then a treatment by voltage application is recommended.
Note: The JEDEC-J-STD-020 standard does not apply.

Floor Life
The Capacitor should be soldered within 4 weeks after removal from sealed bag. Reseal the unused capacitors into plastic bags. All parts manufactured from week 1 of year 2022 are packed in sealed plastic bags.

Re-age Procedure
Apply the rated DC voltage to the capacitor at 105°C for a period of 120 minutes through a 1 kΩ series resistor.

Table 1 – Ratings & Part Number Reference

VDC	VDC Surge Voltage	Rated Capacitance 120 Hz 20°C (µF)	Case Size D x L (mm)	ESR 100 kHz 20°C (mΩ)	RC 100 kHz 105°C (mA)	LC 20°C 2 Minutes (µA)	KEMET Part Number
4	4.6	150	6.3 × 5.7	22	2,570	120	A766EB157M0GLAE022
4	4.6	270	8 × 6.7	22	3,220	216	A766KE277M0GLAE022
4	4.6	560	8 × 6.7	22	3,220	448	A766KE567M0GLAE022
6.3	7.2	120	6.3 × 5.7	22	2,570	151.2	A766EB127M0JLAE022
6.3	7.2	220	6.3 × 5.7	22	2,570	277.2	A766EB227M0JLAE022
6.3	7.2	220	8 × 6.7	22	3,220	277.2	A766KE227M0JLAE022
6.3	7.2	390	8 × 6.7	22	3,220	491.4	A766KE397M0JLAE022
10	11.5	68	6.3 × 5.7	30	2,200	136	A766EB686M1ALAE030
10	11.5	120	6.3 × 5.7	27	2,320	240	A766EB127M1ALAE027
10	11.5	150	8 × 6.7	30	2,760	300	A766KE157M1ALAE030
16	18.4	39	6.3 × 5.7	37	2,050	124.8	A766EB396M1CLAE037
16	18.4	68	6.3 × 5.7	30	2,200	217.6	A766EB686M1CLAE030
16	18.4	82	8 × 6.7	30	2,760	262.4	A766KE826M1CLAE030
16	18.4	120	8 × 6.7	27	2,900	384	A766KE127M1CLAE027
16	18.4	270	8 × 12.2	14	4,350	864	A766KS277M1CLAE014
20	23	22	6.3 × 5.7	60	1,450	88	A766EB226M1DLAE060
20	23	47	8 × 6.7	45	1,890	188	A766KE476M1DLAE045
25	28.8	10	8 × 6.7	60	1,500	125	A766KE106M1ELAE060
VDC	**VDC Surge**	**Rated Capacitance**	**Case Size**	**ESR**	**RC**	**LC**	**KEMET Part Number**

(1)Electrical Parameters code. See Part Number System for available options.

Downloaded from Arrow.com.

Installing

Solid Polymer Aluminum Capacitors are prone to a change in leakage current due to thermal stress during soldering. The leakage current may increase after soldering or reflow soldering. Therefore, verify the suitability for use in circuits sensitive to leakage current.

A general principle is that lower temperature operation results in a longer, useful life of the capacitor. For this reason, it should be ensured that electrolytic capacitors are placed away from heat-emitting components. Adequate space should be allowed between components for cooling air to circulate, especially when high ripple current loads are applied. In any case, the maximum rated temperature must not be exceeded.

- Do not deform the case of capacitors or use capacitors with a deformed case.
- Verify that the connections of the capacitors are able to insert on the board without excessive mechanical force. Excessive force during insertion, as well as after soldering may cause terminal damage and affect the electrical performance.
- Ensure electrical insulation between the capacitor case, negative terminal, positive terminal and PCB.
- If the capacitors require mounting through additional means, the recommended mounting accessories shall be used.
- Verify the correct polarization of the capacitor on the board.

KEMET recommends, to ensure that the voltage across each capacitor does not exceed its rated voltage.

Temperature Stability Characteristics

table characteristics in a very low temperature range allows for less circuits in the design.

Due to a solid polymer electrolyte, Solid Polymer Aluminum Capacitors feature higher conductivity. This results in a lower ESR which, coupled with high capacitance allows an aluminum polymer capacitor to replace several standard electrolytic capacitors, reducing the number of components and maximizing board space.

The ESR of polymer capacitors is nearly constant within its operating temperature range, while the ESR of a standard electrolytic capacitor noticeably changes with temperature.

Temperature Stability Characteristics

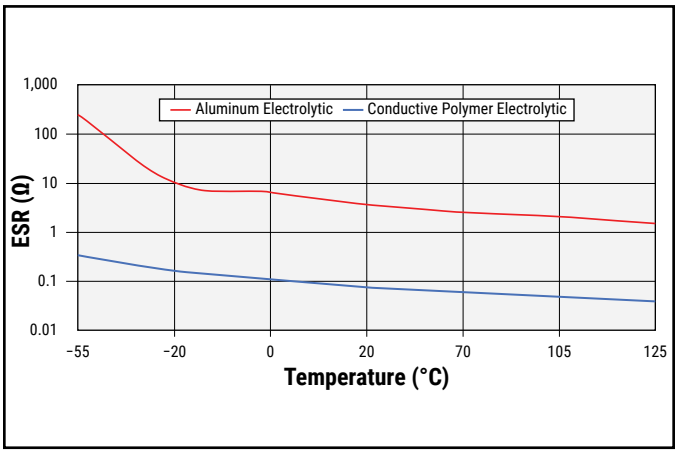

Downloaded from Arrow.com.

Expected Life Calculation Chart

Expected life depends on operating temperature according to the following formula:

$L = Lo \times 10^{(To-T)/20}$

Where:

L: Expected life
Lo: Life at maximum permissible operating temperature with rated operating voltage applied (hours)
T: Actual operating temperature
To: Maximum permissible operating temperature

Expected Life Calculation Chart

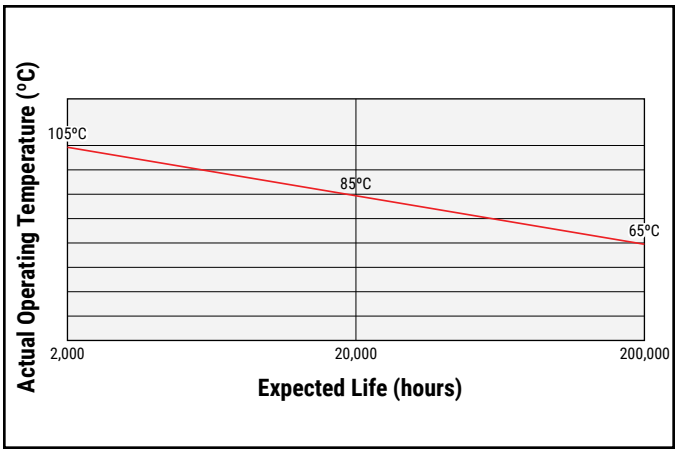

The effect of derating temperature can be seen in this graph.
In this example, the life expectancy of a 2,000 hour polymer capacitor is significantly greater than that of a 2,000 hour standard electrolytic capacitor.

Capacitor Life (H)

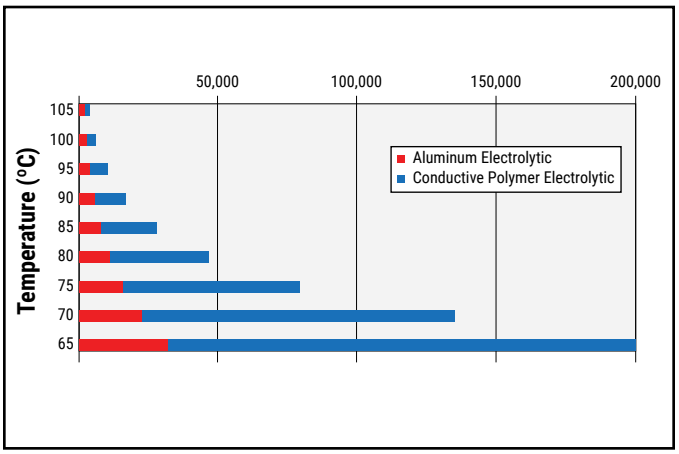

Downloaded from Arrow.com.

Stability of ESR across Frequency Range

Due to a solid polymer electrolyte, the ESR curve of a solid polymer aluminum capacitor, is lower and more stable than that of a standard electrolytic capacitor.

Stable ESR Values across Frequency

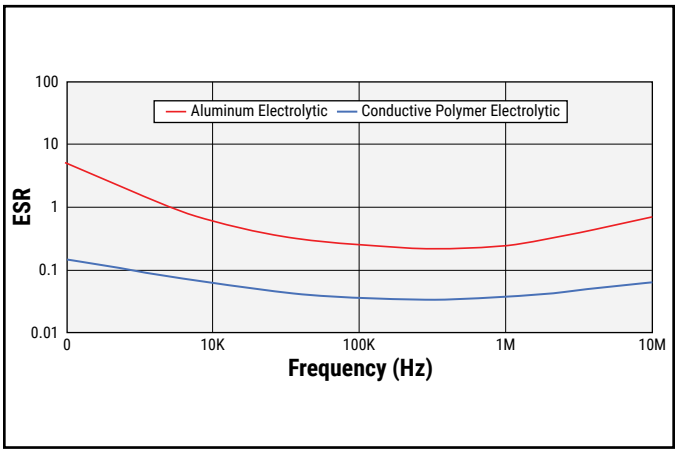

High Resistance to Ripple Current

As a result of a lower ESR, solid polymer aluminum capacitors are able to withstand higher ripple currents during normal operation.

Allowable Ripple Current (100 kHz 105°C)

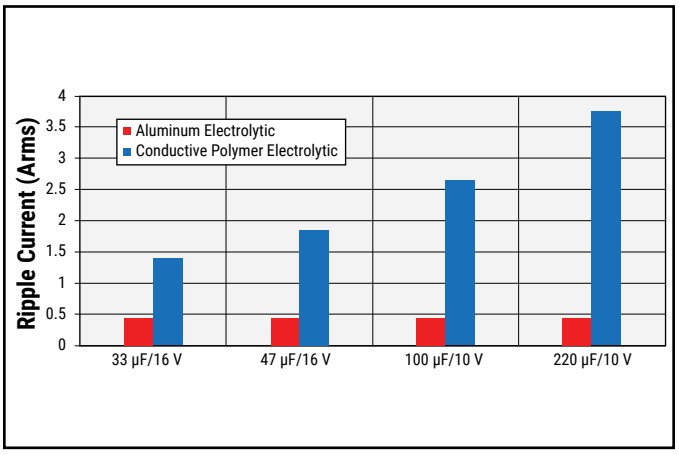

Downloaded from Arrow.com.

Landing Pad – Millimeters

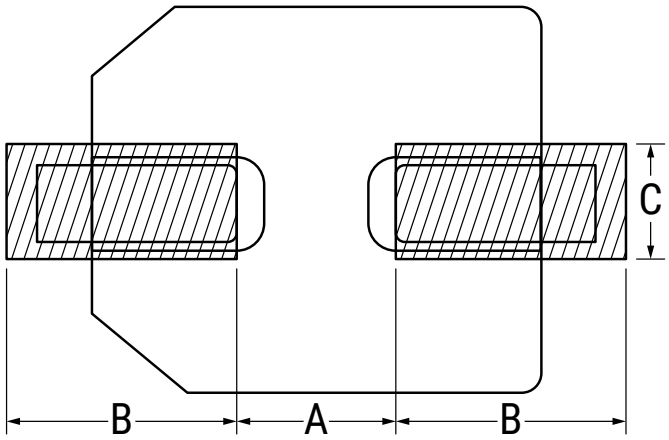

Diameter	A	B	C
5	1.4	3	1.6
6.3	1.9	3.5	1.6
6.3 (Anti-Vibration)	1.9	3.5	3
8	3.1	4.2	2.2
8 (Anti-Vibration)	3.1	4.2	4.2
10	4.5	4.4	2.2

Marking

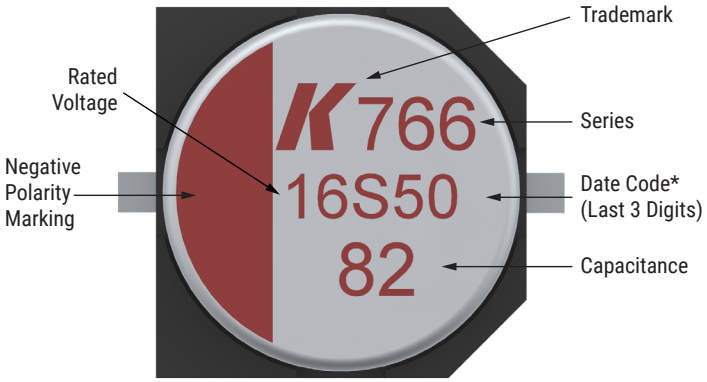

Date Code*	
1st Digits = Rated Voltage	
Letter = Year Code	S = 2019
Final Digits = Week of the Year	01 = 1st week of the Year to 52 = 52nd week of the Year
Year Code	
S	2019
T	2020
U	2021
V	2022
W	2023
X	2024
Y	2025
Z	2026

Downloaded from Arrow.com.

Construction

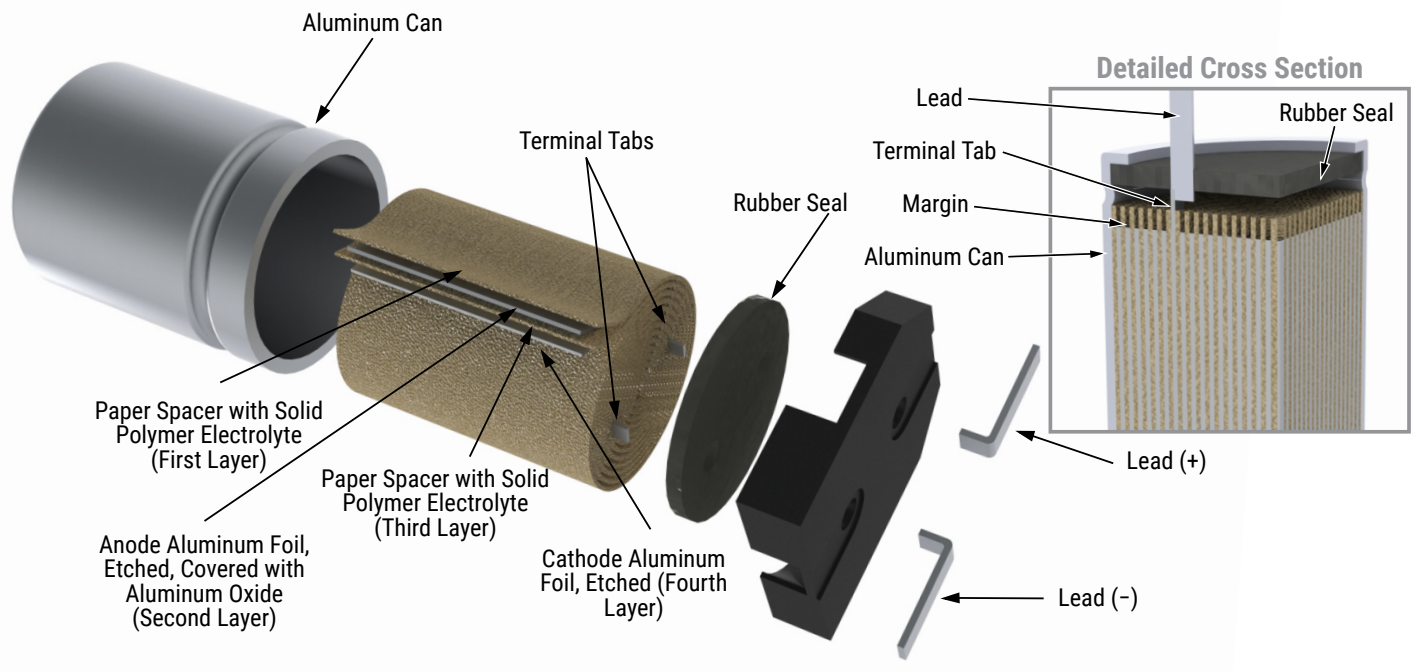

Downloaded from Arrow.com.

Re-Flow Soldering

The soldering conditions should be within the specified conditions below:

- Do not dip the capacitors body into the melted solder.
- Flux should only be applied to the capacitors terminals.
- Vapour heat transfer systems are not recommended. The system should be thermal, such as infra-red radiation or hot blast.
- Observe the soldering conditions as shown below.
- Do not exceed these limits and avoid repeated reflowing.

Time Period	Preheat t_s	t_L	t_d	t_p	Reflow Number
Temperature (°C)	150 – 180	≥ 217	≥ 230	260	1
				250	1 or 2
Time (seconds)	60 - 120	≤ 50	≤ 40	≤ 5	–

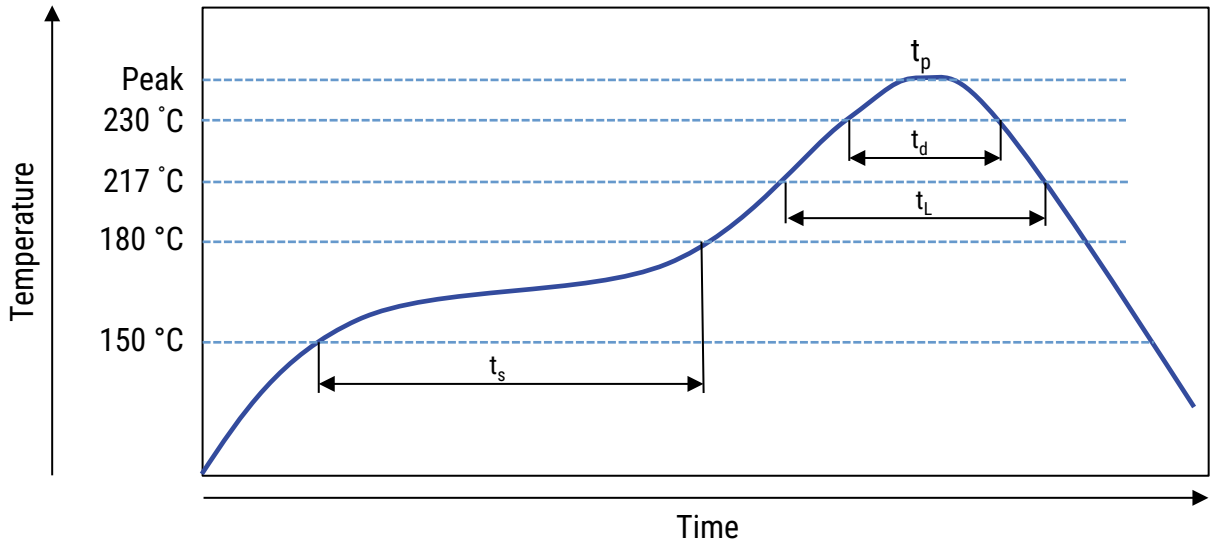

Downloaded from Arrow.com.

Lead Taping & Packaging

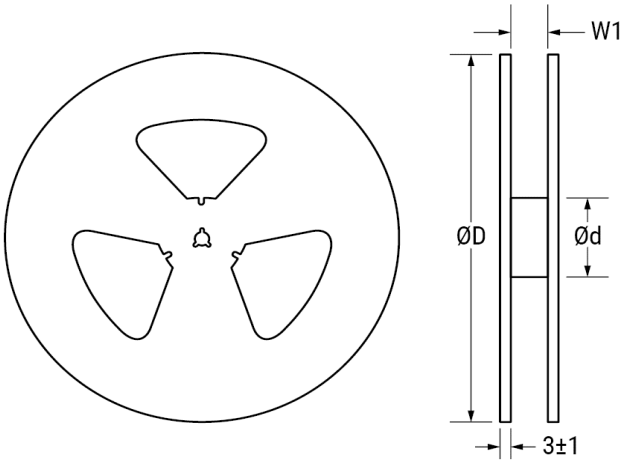

Size Code	Diameter (mm)	Length (mm)	Reel Quantity/SPQ	Box Quantity	Reel		
					d (mm)	D (mm)	W1 (mm)
					±3	±2	±2
BC	5	6	1,000	10,000	100	380	12
BG	5	7	1,000	10,000	100	380	12
EB	6.3	5.7	1,000	10,000	100	380	16
EG	6.3	7	1,000	10,000	100	380	16
EK	6.3	8	1,000	10,000	100	380	16
EN	6.3	9.7	800	8,000	100	380	16
KE	8	6.7	1,000	6,000	100	380	24
KG	8	7	1,000	6,000	100	380	24
KH	8	7.5	500	3,000	100	380	24
KN	8	9.7	500	3,000	100	380	24
KS	8	12.2	400	2,400	100	380	24
KS (Anti-Vibration)	8	12.4	400	2,400	100	380	24
MN	10	10.2	500	3,000	100	380	24
MN (Anti-Vibration)	10	10.4	500	3,000	100	380	24
MS	10	12.2	400	2,400	100	380	24
MU	10	12.6	400	2,400	100	380	24
MS (Anti-Vibration)	10	12.4	400	2,400	100	380	24

Downloaded from Arrow.com.

Taping for Automatic Insertion Machines

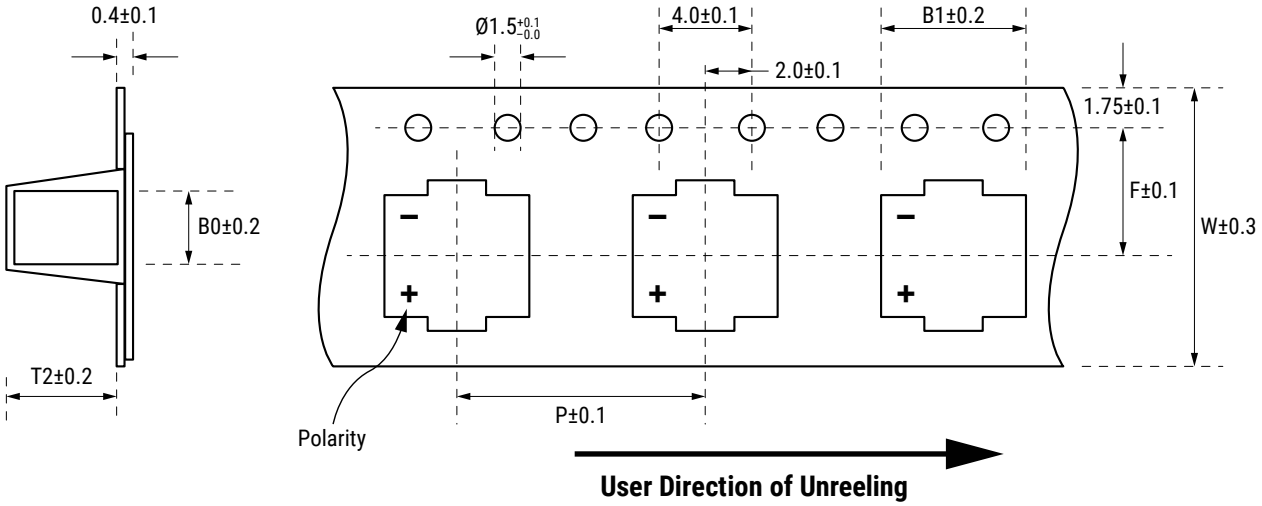

Size Code	Diameter	Length	W	P	F	B1	B0	T2
	(mm)	(mm)	±0.3	±0.1	±0.1	±0.2	±0.2	±0.2
BC	5.0	6.0	16.0	12.0	7.5	5.6	5.6	7.1
BG	5.0	7.0	16.0	12.0	7.5	5.6	5.6	7.1
EB	6.3	5.7	16.0	12.0	7.5	7.0	7.0	5.8
EG	6.3	7.0	16.0	12.0	7.5	7.0	7.0	7.6
EK	6.3	8.0	16.0	12.0	7.5	7.0	7.0	7.6
EN	6.3	9.7	16.0	12.0	7.5	7.0	7.0	9.8
KE	8.0	6.7	24.0	12.0	11.5	8.7	8.7	6.8
KG	8.0	7.0	24.0	12.0	11.5	8.7	8.7	6.8
KH	8.0	7.5	24.0	12.0	11.5	8.6	8.6	8.4
KN	8.0	9.7	24.0	16.0	11.5	8.7	8.7	9.8
KS	8.0	12.2	24.0	16.0	11.5	8.7	8.7	12.6
KS (Anti-Vibration)	8.0	12.4	24.0	16.0	11.5	8.7	9.2	12.8
MN	10.0	10.0	24.0	16.0	11.5	10.7	10.7	10.1
MN (Anti-Vibration)	10.0	10.4	24.0	16.0	11.5	10.7	11.2	10.3
MS	10.0	12.2	24.0	16.0	11.5	10.7	10.7	12.5
MS (Anti-Vbration)	10.0	12.4	24.0	16.0	11.5	10.7	11.2	12.7
MU	10.0	12.6	24.0	16.0	11.5	10.7	10.7	13.1

Downloaded from Arrow.com.

Construction Data

The manufacturing process begins with the anode foil being electrochemically etched to increase the surface area and then 'formed' to produce the aluminum oxide layer. Both the anode and cathode foils are then interleaved with absorbent paper and wound into a cylinder. During the winding process, aluminum tabs are attached to each foil to provide the electrical contact.

The deck, complete with terminals, is attached to the tabs and then folded down to rest on top of the winding. The complete winding is impregnated with a conductive polymer electrolyte before being housed in a suitable container, usually an aluminum can, and sealed. Throughout the process, all materials inside the housing must be maintained at the highest purity and be compatible with the electrolyte.

Each capacitor is aged and tested before being packed. The purpose of aging is to repair any damage in the oxide layer and thus reduce the leakage current to a very low level. Aging is normally carried out at the rated temperature of the capacitor and is accomplished by applying voltage to the device while carefully controlling the supply current. The process may take several hours to complete. Damage to the oxide layer can occur due to variety of reasons:

- Slitting of the anode foil after forming
- Attaching the tabs to the anode foil
- Minor mechanical damage caused during winding

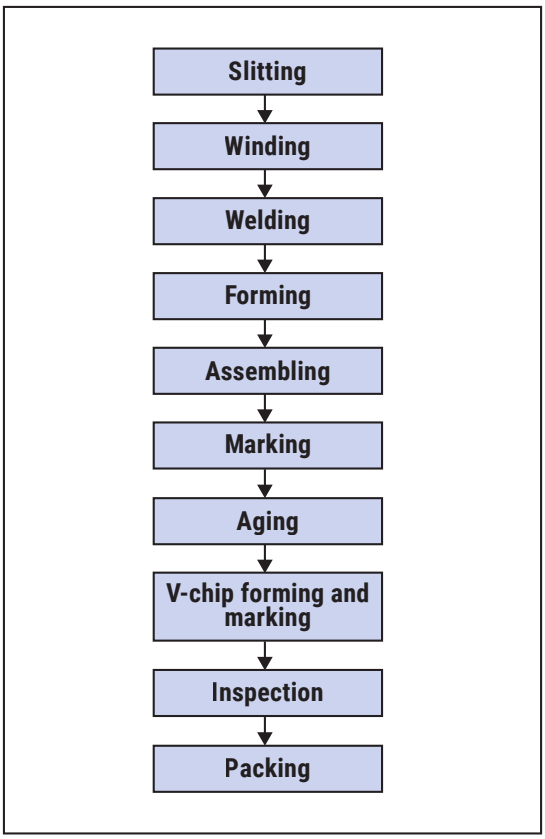

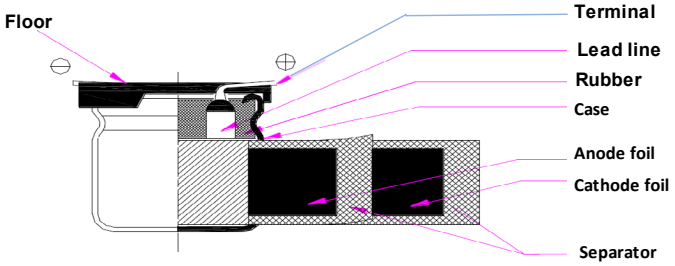

Downloaded from Arrow.com.

Product Safety

THESE NOTES SHOULD BE READ IN CONJUNCTION WITH THE PRODUCT DATA SHEET. FAILURE TO OBSERVE THE RATINGS AND THE INFORMATION ON THIS SHEET MAY RESULT IN A SAFETY HAZARD.

Warning

When potential lethal voltages e.g. 30 VAC (RMS) or 60 VDC are applied to the terminals of this product, the use of a hazard warning label is recommended.

1. Electrolyte

Conductive polymer aluminum solid electrolytic capacitors contain polymers (electrolytes) which can be hazardous.

1.1 Safety Precautions

In the event of gas venting, avoid contact and inhalation. Wash the affected area with hot water. Use rubber gloves to avoid skin contact. Any contact with the eyes should be liberally irrigated with water and medical advice sought.

2. Intrinsic Properties

2.1 Operating

DC capacitors are polar devices and will operate safely only if correctly connected. Reversing the connections will result in high leakage currents which could subsequently cause short circuit failure and possibly explosion and fire. Correctly polarized operation may result in the above failure modes if:

- The surge voltage is exceeded
- The ambient temperature is too high
- Excessive ripple currents are applied

2.2 Non-Operating

Excessive torque or soldering heat may affect the performance of the capacitor or damage the sealing. Electric shock may result if capacitors are not discharged.

3. Disposal

Aluminum electrolytic capacitors are consignable waste under the Special Waste Regulations 1996 (Statutory Instrument 1996 No 972), which complies with the EC Hazardous Waste Directive – Directive 91/689/EEC. The electrolyte should therefore be treated as a hazardous waste and advice should be sought from the local office of the Environmental Agency regarding its disposal.

Due to the construction of an aluminum electrolytic capacitors, high temperature incineration may cause the component to explode due to build-up of internal pressure. In addition, incineration may also cause the emission of noxious fumes. KEMET strongly recommends that if there are any doubts regarding the disposal of conductive polymer aluminum solid electrolytic capacitors, that advice be sought from the local regulating authority.

In addition, KEMET would like to request that users of aluminum electrolytic capacitors respect the needs of the environment and, wherever possible, recover as much of the materials as possible, i.e., aluminum.

Downloaded from Arrow.com.

Product Safety cont.

4. Unsafe Use
Most failures are of a passive nature and do not represent a safety hazard. A hazard may, however, arise if this failure causes a dangerous malfunction of the equipment in which the capacitor is employed. Circuits should be designed to fail safe under the normal modes of failure.
The usual failure mode is an increase in leakage current or short circuit. Other possible modes are decrease of capacitance, increase in dissipation factor (and impedance) or an open circuit. Capacitors should be used in a well-ventilated enclosure or cabinet.

5. Fumigation
In many countries throughout the world it is now common practice to fumigate shipments of products in order to control insect infestation, particularly when wooden packaging is used. Currently, methyl bromide is widely used as a fumigant, which can penetrate cardboard packing and polymer bags and, therefore, come into direct contact with equipment or components contained within.

If aluminum electrolytic capacitors become exposed to methyl bromide then corrosion may occur, depending upon the concentration and exposure time to the chemical.

This failure mode can affect all types of KEMET aluminum electrolytic capacitors. Methyl bromide can penetrate the seals of aluminum electrolytic capacitors and cause internal corrosion of the anode connection, resulting in the component becoming open circuit. The rate of corrosion will depend upon the level of exposure to methyl bromide as well as the subsequent operating conditions, such as voltage and temperature. It may take months or, in some cases, several years before the component becomes open circuit.

6. Dielectric Absorption
A phenomenon known as dielectric absorption can cause aluminum electrolytic capacitors to recharge themselves. The phenomenon is well known but impossible to predict with any great accuracy, so potentially any electrolytic product could be affected. Thus, a capacitor that has been charged and then completely discharged will appear to recharge itself if left open circuit; this will manifest itself as a small voltage across the terminals of the capacitor. Generally, the voltages seen are less than 20 VDC. However, higher voltages have on occasion been reported.

In order to avoid any problems caused by this voltage, KEMET recommends that capacitors be discharged before connecting to the terminals.

Downloaded from Arrow.com.

KEMET Electronics Corporation Sales Offices

For a complete list of our global sales offices, please visit https://www.yageogroup.com/SalesResources/SalesOffices

Disclaimer

YAGEO Corporation and its affiliates do not recommend the use of commercial or automotive grade products for high reliability applications or manned space flight.

All product specifications, statements, information and data (collectively, the "Information") in this datasheet are subject to change. The customer is responsible for checking and verifying the extent to which the Information contained in this publication is applicable to an order at the time the order is placed. All Information given herein is believed to be accurate and reliable, but it is presented without guarantee, warranty, or responsibility of any kind, expressed or implied.

Statements of suitability for certain applications are based on KEMET Electronics Corporation's ("KEMET") knowledge of typical operating conditions for such applications, but are not intended to constitute – and KEMET specifically disclaims – any warranty concerning suitability for a specific customer application or use. The Information is intended for use only by customers who have the requisite experience and capability to determine the correct products for their application. Any technical advice inferred from this Information or otherwise provided by KEMET with reference to the use of KEMET's products is given gratis, and KEMET assumes no obligation or liability for the advice given or results obtained.

Although KEMET designs and manufactures its products to the most stringent quality and safety standards, given the current state of the art, isolated component failures may still occur. Accordingly, customer applications which require a high degree of reliability or safety should employ suitable designs or other safeguards (such as installation of protective circuitry or redundancies) in order to ensure that the failure of an electrical component does not result in a risk of personal injury or property damage.

Although all product–related warnings, cautions and notes must be observed, the customer should not assume that all safety measures are indicated or that other measures may not be required.

KEMET requires its products to be packaged and shipped on pallets. This is because KEMET's products are specifically designed to be packed onto pallets during shipment. If for any reason, the products are removed from pallets by the shipping party and shipped to the end customer, then additional external protection is required. In this instance, an external box with two carton layers and an upwards orientation sticker must be used by the shipping party, with the empty space filled with filling material, and afterwards sealing the box. If this packing and packaging guideline is not followed by the shipping party, the shipping party, and not KEMET, will be held responsible for any packaging, packing and/or product damages upon delivery of the products to the end customer. KEMET hereby disclaims any liability for damages to the products or otherwise that have been, or threaten to be, inflicted, result from or are in any way related to the packaging, packing or damage by the shipping party in contravention of the packing and packaging guidelines herein.

KEMET is a registered trademark of KEMET Electronics Corporation.

Downloaded from Arrow.com.