REVISIONS					
REV	ECO	DESCRIPTION	DATE	BY	APPR
01	–	CUSTOMER DRAWING	–	–	–

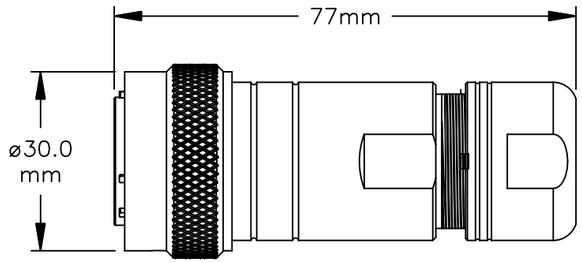

ASSEMBLED VIEW

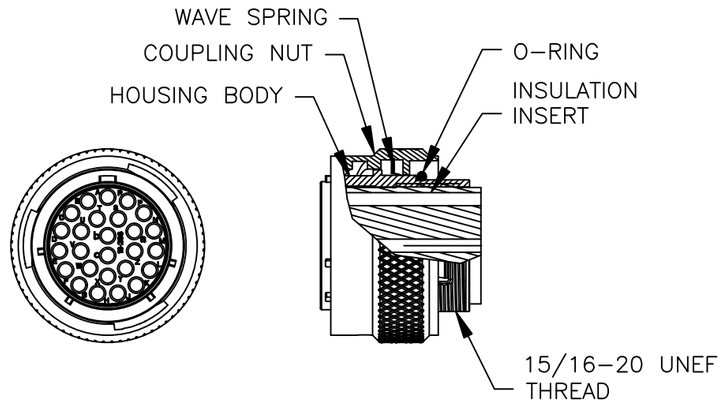

ILLUSTRATION: COMPLETE KIT

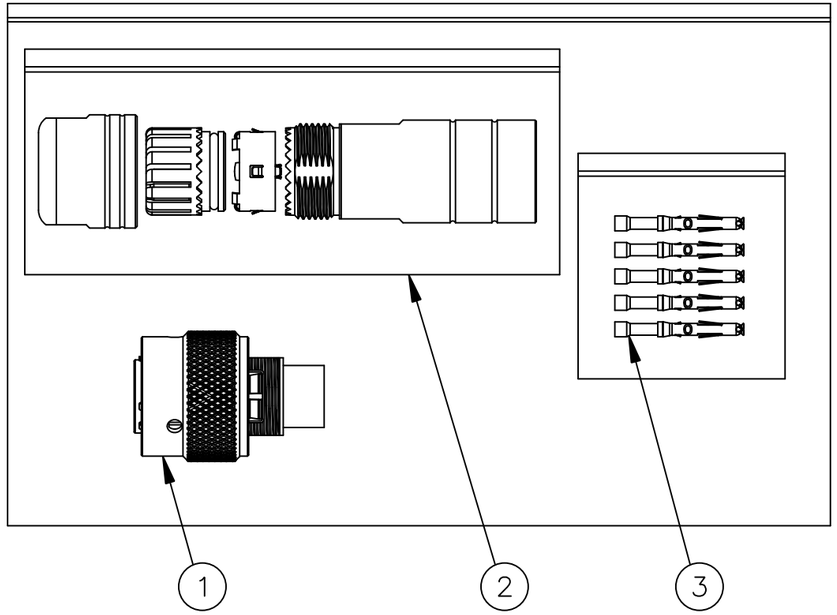

NOTES:

1) CONTACT BARREL RANGE: 20AWG TO 22AWG
2) RECOMMENDED CRIMP TOOLS:
   HAND CRIMPER: MFX–3959
   PNEUMATIC CRIMPER: MFX–3960
3) EXTRACTION TOOL: QXRT20
4) MATERIALS:
   HOUSING BODY: ZINC DIE CAST, NICKEL PLATED
   INSULATION INSERT: PA66, UL94/V–0
   CONTACT: BRASS, GOLD FLASH PLATED
   SEAL AND O–RING: NBR (NITRILE BUTADIENE RUBBER)
5) ELECTRICAL DATA:
   a) CURRENT (MAX): 7.5A
   b) VOLTAGE (MAX): 150V AC/DC
   c) INSULATION RESISTANCE (MIN): 5000M OHMS
   d) TEST VOLTAGE (BETWEEN CONTACTS): 1500V
7) TECHNICAL DATA:
   a) TEMPERATURE RANGE: –40°C TO 105°C
   b) PROTECTION: IP67 (MATED CONDITION)
   c) MATING CYCLES: >500
   d) VIBRATION RESISTANCE PER MIL–STD–202 METHOD 204
   e) THERMAL SHOCK PER MIL–STD–202 METHOD 207
   f) 48 HOUR SALT SPRAY PER MIL–STD–202 METHOD 101
8) RoHS COMPLIANT

QUANTITY	PART NUMBER	DESCRIPTION	ITEM
26	MS20W23F	CONTACT, SOCKET, SIZE 20	3
1	RT0L–16CG–S1	CORD GRIP	2
1	RT0W61626SNH	CONNECTOR	1

MATERIALS LIST

UNLESS OTHERWISE SPECIFIED
1) All dimensions are in metric(mm).
2) Tolerances are as follows:
1 PL DEC ±0.30 | Fractions ±1/64
2 PL DEC ±0.15 | Angles ±1°
3 PL DEC ±0.08
3) Note reference = X

MATERIAL SPECIFICATIONS:

PROCESS SPECIFICATIONS:

NEXT ASS'Y:

SIGNATURES		DATE
DRAWN:	MRF	10SEP13
CHECKED:		
ENGINEER:		
APPROVAL:		
CUSTOMER:		

THIS DRAWING IS SUPPLIED FOR INFORMATION ONLY. DESIGN FEATURES, SPECIFICATIONS AND PERFORMANCE DATA SHOWN HEREON ARE THE PROPERTY OF THE AMPHENOL CORPORATION. NO RIGHTS OF REPRODUCTION ARE IMPLIED. ALL DIMENSIONS ARE SUBJECT TO NORMAL MANUFACTURING VARIATIONS.

Amphenol

Sine Systems - www.amphenol-sine.com
44724 Morley Drive
Clinton Township, MI 48036

KIT, ECO-MATE

SIZE	TYPE	DWG NO:	REVISION
B	C-	RT0W61626SNH-K	01

SCALE: NONE SHEET 1 OF 1

TITLE: KIT, ECO-MATE
DWG NO:
REV: 01
SH: 1
OF: 1

Downloaded from Arrow.com.