QSFP-40G-LR4: CISCO COMPATIBLE PART

QSFP-40G-LR4-IO: Integra Part

Product Description

QSFP+, 1310nm, LR4 SMF 10km, 40G DDM, Cisco QSFP-40G-LR4 Compatible

Integra manufactures the highest quality **QSFP** transceivers in the industry, designed to be 100% interoperable with all OEM platforms. We're the first optics manufacturer in the Western Hemisphere to invest in high-speed robots, allowing us to scale our operations to handle virtually any order, large or small, and ensure every transceiver is correctly coded and tested 100% of the time.

DOWNLOAD **DATASHEET** | $ REQUEST A **QUOTE**

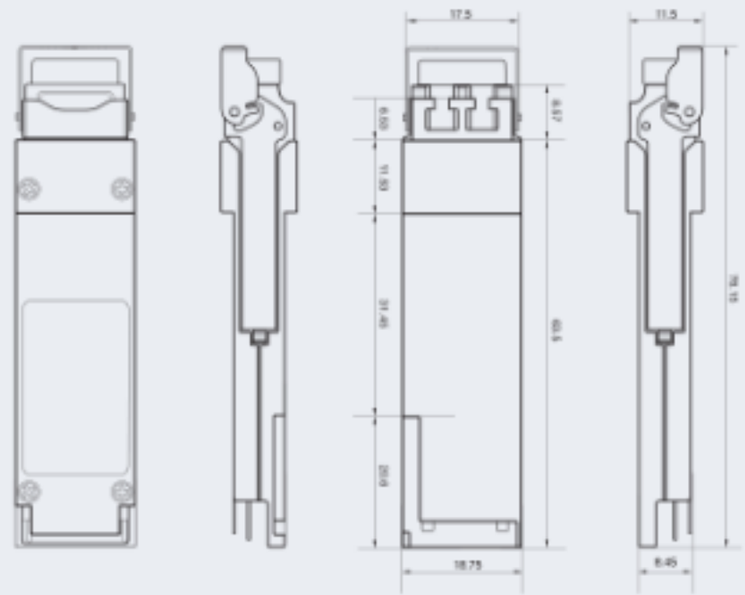

Related Products

If you're interested in this component, you might also want to search for these related products, accessories, or our Smart Coder and Smart Coder Package

Products	Top Accessories	Smart Coder
• CFP-100G-ER4-IO • CFP-100G-LR4-IO • CFP-100G-LR4.3C20-IO • CFP-100G-SR10-IO • CFP-40G-LR4-IO • CS.3C20-IO • View more	• IFC-CCR125 • OTE-OPM-MCH • OTE-CPM-18 • OTE-DPM-48-100	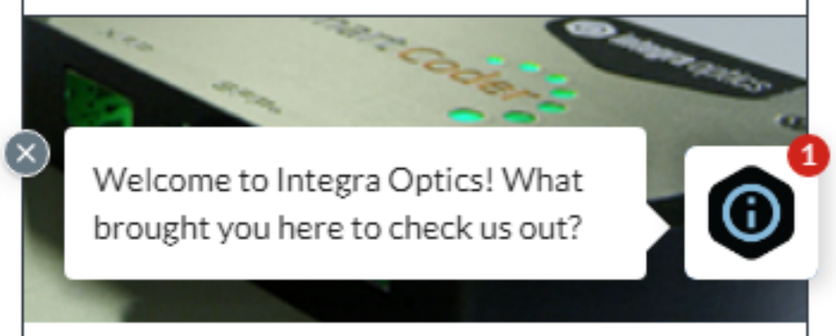 Giving network engineers and field techs the power to quickly and easily reconfigure transceivers in the field for any network hardware.

Downloaded from Arrow.com.