SERIES: P78B-500 | DESCRIPTION: DC-DC CONVERTER

FEATURES

- 0.5 A current output
- pin compatible with LM78XX linear regulators
- -40 ~ 85°C operating temperature
- input voltage range up to 4.75 ~ 36 Vdc
- continuous short circuit protection
- compact SIP3 package
- low ripple and noise
- designed to meet EN/IEC 62368-1

RoHS

MODEL

MODEL	input voltage typ (Vdc)	input voltage range (Vdc)	output voltage (Vdc)	output current max (mA)	output power typ (W)	ripple & noise[1] max (mVp-p)	efficiency[2] typ (%)
P7802B-500	24	4.75~36	1.8	500	0.9	50	90.0
P7803B-500	24	4.75~36	3.3	500	1.65	50	94.5
P7805B-500	24	6.5~36	5.0	500	2.5	50	95.5
P7806B-500	24	8~36	6.5	500	3.25	60	96.5
P7809B-500	24	11~36	9.0	500	4.5	70	96.5
P7812B-500	24	15~36	12.0	500	6.0	70	96.5
P7815B-500	24	18~36	15.0	500	7.5	70	96.5

Notes:
1. At the lowest input voltage, the loading is less 15% (75mA), the R&N will be 150mVp-p (max.).
2. At min Vin, full load at 25°C, and ±2% tolerance
3. All specifications measured at: Ta=25°C, nominal input voltage, rated output load, and after warm up unless otherwise specified.

PART NUMBER KEY

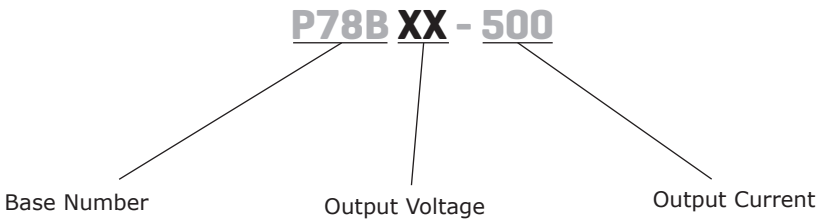

Please read our datasheet & drawing disclaimer here.
Downloaded from Arrow.com.

INPUT

parameter	conditions/description	min	typ	max	units
operating input voltage				36	Vdc
no load input current			2	7	mA

OUTPUT

parameter	conditions/description	min	typ	max	units
maximum capacitive load[4]	1.8, 3.3, 5, 6.5, 9 Vdc output models 12 Vdc output model 15 Vdc output model			470 330 270	µF µF µF
line regulation	measured from low to high line, full load		0.2	0.4	%
load regulation	measured from 10~100% load, typical Vin		0.8 0.4	1 0.6	% %
voltage accuracy			±3		%
switching frequency	at nominal Vin		410		kHz

Note: 4. The capacitive load is test by minimum input and constant resistive load.

PROTECTIONS

parameter	conditions/description	min	typ	max	units
short circuit protection	continuous, auto recovery				

SAFETY AND COMPLIANCE

parameter	conditions/description	min	typ	max	units
safety approvals	designed to meet 62368-1: EN, IEC				
EMI	EN 55032 Class A/Class B				
ESD	EN 61000-4-2 Air ±8 kV; Contact ±6 kV, perf. Criteria A				
fast transient[5]	EN 61000-4-4, ±2 kV, perf. Criteria A				
surge[5]	EN 61000-4-5, ±2 kV, perf. Criteria A				
MTBF	as per MIL-HDBK-217F, full load, 25 °C	3,300,000			hours
RoHS	yes				

Note: 5. External circuit for testing (1500µF Electrolytic capacitor and TVS).

ENVIRONMENTAL

parameter	conditions/description	min	typ	max	units
operating temperature	see derating curve	-40		85	°C
storage temperature		-55		125	°C
operating humidity	non-condensing			95	%
temperature coefficient			0.02		%/ °C
maximum case temperature				100	°C
vibration	MIL-STD-202G				

Downloaded from Arrow.com.

DERATING CURVE

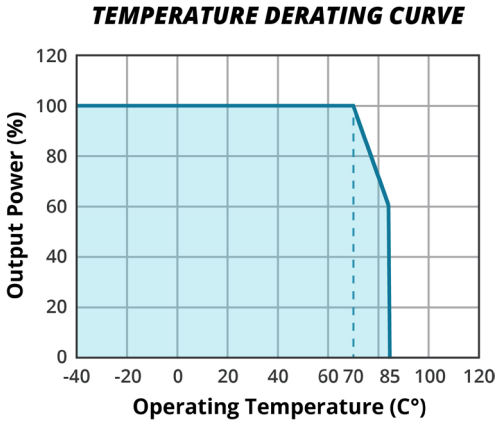

MECHANICAL

parameter	conditions/description	min	typ	max	units
dimensions	11.6 x 7.6 x 10.2				mm
case material	UL94 V-0 plastic				
weight			1.85		g
cooling method	natural convection				

MECHANICAL DRAWING

units: mm
tolerance: ±0.25 mm

PIN CONNECTIONS	
PIN	Function
1	+Vin
2	GND
3	+Vout

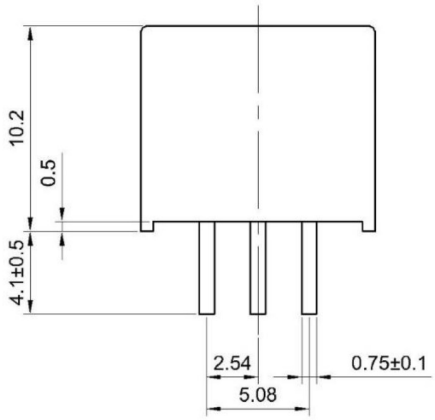

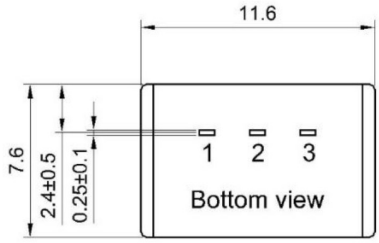

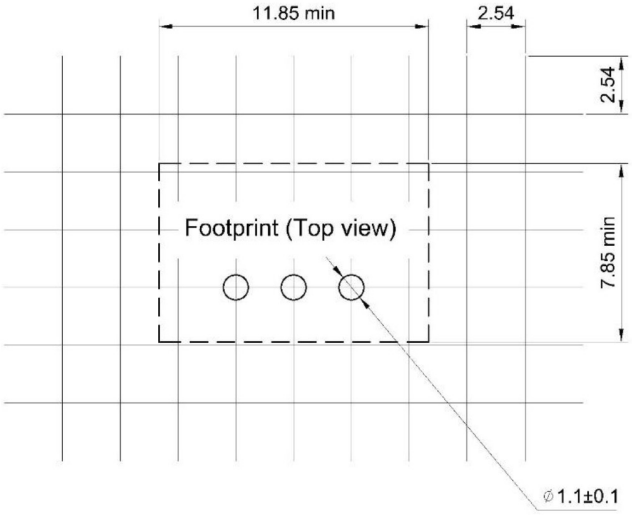

Downloaded from Arrow.com.

RIPPLE AND NOISE MEASUREMENT METHOD

Figure 1

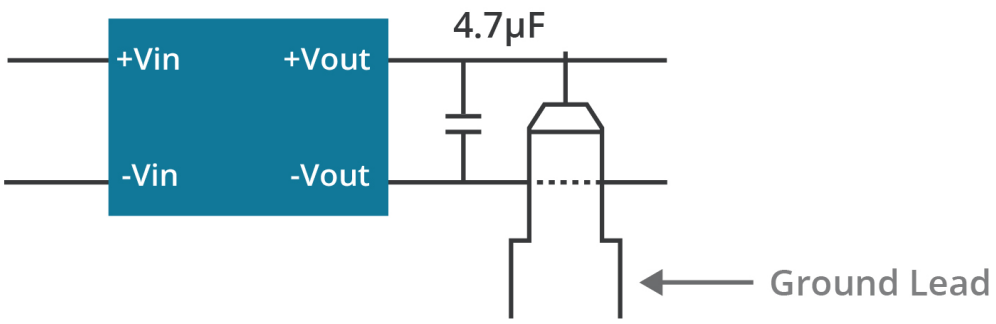

APPLICATION CIRCUIT

Figure 2

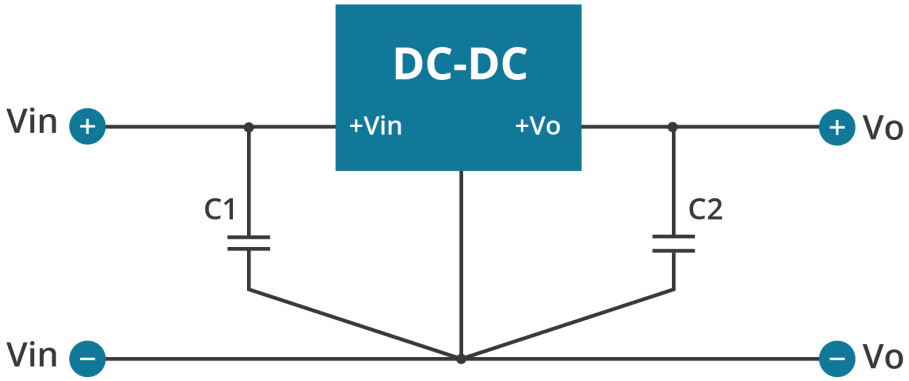

Downloaded from Arrow.com.

EMI FILTERING

Figure 3

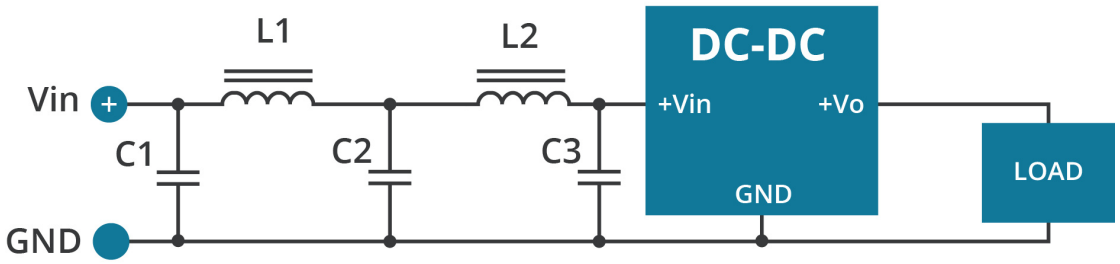

Table 1

COMPONENTS					
CLASS	C1	L1	C2	L2	C3
Class A	1206 / 4.7µF / 50V / MLCC	10µH	1206 / 4.7µF / 50V / MLCC	-	-
Class B	1210 / 10µF / 50V / MLCC	22µH	1210 / 10µF / 50V / MLCC	200µH (common choke)	1210 / 10µF / 50V / MLCC

EFT AND SURGE EXTERNAL CAPACITOR REQUIRED

Figure 4

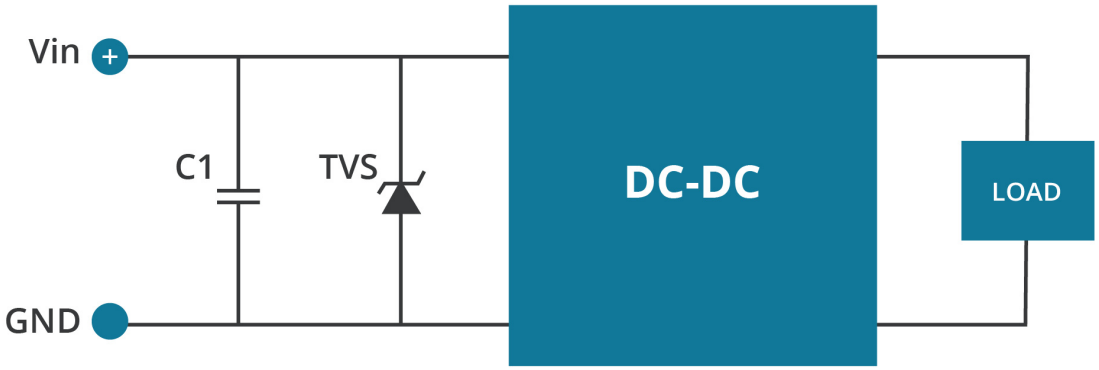

Table 2

C1	TVS
1500 / 50V	5.0SMLJ40A

Downloaded from Arrow.com.

REVISION HISTORY

rev.	description	date
1.0	initial release	09/09/2024
1.01	datasheet updated	05/29/2025

The revision history provided is for informational purposes only and is believed to be accurate.

CUI INC
a bel group

15575 SW Sequoia Pkwy #100
Portland, OR 97224
800.275.4899

Fax 503.612.2383
Belfuse.com
powersupport@belf.com

CUI offers a two (2) year limited warranty. Complete warranty information is listed on our website.

CUI reserves the right to make changes to the product at any time without notice. Information provided by CUI is believed to be accurate and reliable. However, no responsibility is assumed by CUI for its use, nor for any infringements of patents or other rights of third parties which may result from its use.

CUI products are not authorized or warranted for use as critical components in equipment that requires an extremely high level of reliability. A critical component is any component of a life support device or system whose failure to perform can be reasonably expected to cause the failure of the life support device or system, or to affect its safety or effectiveness.

Downloaded from Arrow.com.