Contact spring for electro-static discharge (ESD)

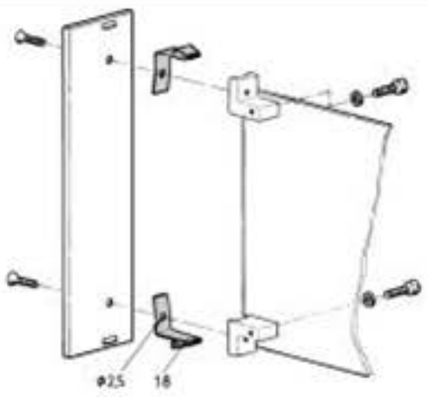

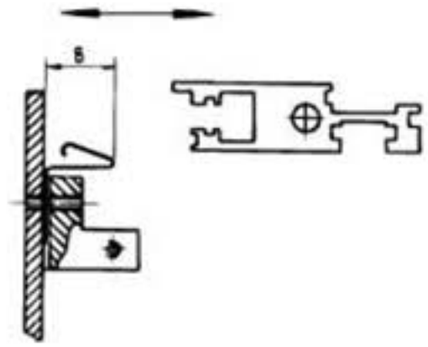

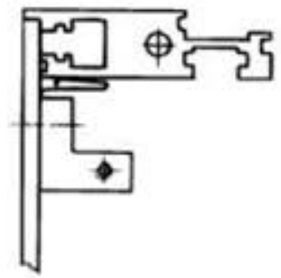

Product illustrations are exemplary illustrations and can deviate from supplied products.

Part no.: 21101-147

Features:

- Assembly between front panel and die-cast printed board bracket of a plug-in unit
- Discharge via a horizontal rail with a conductive finish (chromated)
- Configuration top and/or bottom

Add to basket

Standard pack quantity 50

Produktauslauf RoHS COMPLIANT

Technical information:

Case height H	Usable height	Width W	Depth D

Downloads:

User Manual (Log in Required)
ESD

To gain access to the additional information you must Log in.
If you do not yet have a user name, you may Register here.

Note:

- Not usable for subrack europacPRO and desk-top case ratiopacPRO

SEARCH
Please enter the part no. or a search term:
search

CATEGORY
Home
Cabinets
19" Cases, Table-Top Cases and Tower Cases
Subracks and 19" Chassis
Front Panels and Plug-In Units
Systems
Backplanes and Test Adapters
Accessories

BASKET | LOGIN
Description/Part no.:
Basket: 0 Item Selected
Show basket
Empty basket
Quick order

Downloaded from Arrow.com.