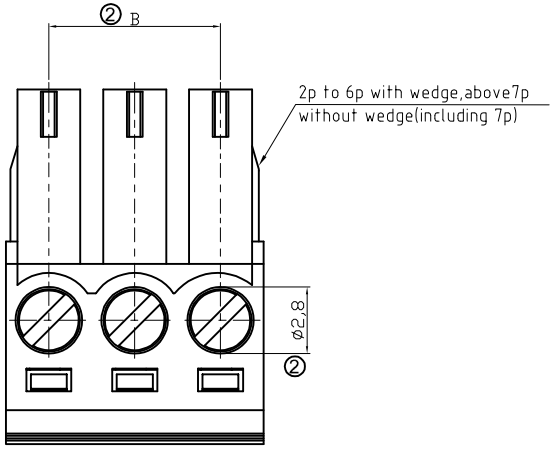

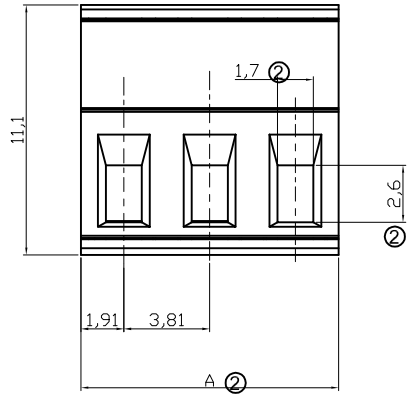

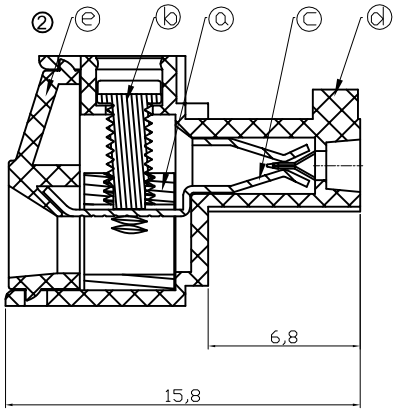

Material

② Item ⓐ Clamp: Brass(CuZn) Ni plated
Item ⓑ Terminal screw :Steel Zinc plating"-"slot type
Item ⓒ Female contact: PhBz, Tin plated
Item ⓓ Terminal(housing): Thermoplastic (UL94V-0) Green(RAL6018/T)
Item ⓔ Terminal(cover): Thermoplastic (UL94V-0) Green(RAL6018/T)

Electrical cULus/VDE

Voltage rating: 300VAC/300VAC
Current rating: 10A/10.5A
Wire range: 1.5mm²
Solid wire(AWG): 16-28/16-28
Stranded wire(AWG): 16-28/16-28
Torque: 3Lb-In /0.2N.m
Screw: M2
Wire strip length: 6-7 mm
Withstanding Voltage: 1.6KV/2.5KV
Operating temperature: -40°C to +115°C
Safety Approval: cULus VDE

② Dimension

DIM A	Nx3.81
DIM B	(N-1)x3.81

N=Number of poles

Poles	Tolerance DIM A	Tolerance DIM B
2P-6P	±0.15	±0.15
7P-12P	±0.20	±0.20
13P-18P	±0.25	±0.25
19P-24P	±0.30	±0.30

RoHS compliant
Unit: mm

③ File No.: E349947

Scale	Free
TOLERANCE	
X.	±0.50
X.X	±0.30
X.XX	±0.10
DIM	TOL
X.°	±1°
Angle	TOL

Id.	Modification	Date	Name
③	Add UL	18.04.2016	Amy
②	Update	06.03.2013	Amy
①	Drawn	10.12.2009	Dean

	Date	Name
Drawn	10.12.2009	Dean
Approved	18.04.2016	Amy

ASSMANN WSW components

Customer-No.

ASSMANN WSW-No. A-TB381-TJxxU

Drawing-No. ASS 3832 CO

rev03

Replace

Sheet

SV3142

Downloaded from Arrow.com.