MICRO SWITCH
A DIVISION OF MINNEAPOLIS HONEYWELL REGULATOR COMPANY
FREEPORT, ILLINOIS
FED. MFR. CODE 91929

SWITCH — ENCLOSED

CATALOG LISTING
51ML10-E1

THIS DRAWING COVERS A PROPRIETARY ITEM AND IS THE PROPERTY OF MICRO SWITCH. A DIVISION OF HONEYWELL. THIS DRAWING IS NOT TO BE COPIED OR USED WITHOUT THE APPROVAL OF MICRO SWITCH.

DRAWING NUMBER: M 51ML10-E1
RELEASE NO. SR 5069
REPLACES
ISSUE 12
CHECK

REVISIONS

A	C052194	J A P 26 SEPT 83
B	C058367	J A S 11 NOV 85
C	C55051-C	
D	CO 63739	T A D 6 JAN 86
E	CO 74287	D J S 15 JUN 88
		G J W 17 APR 93

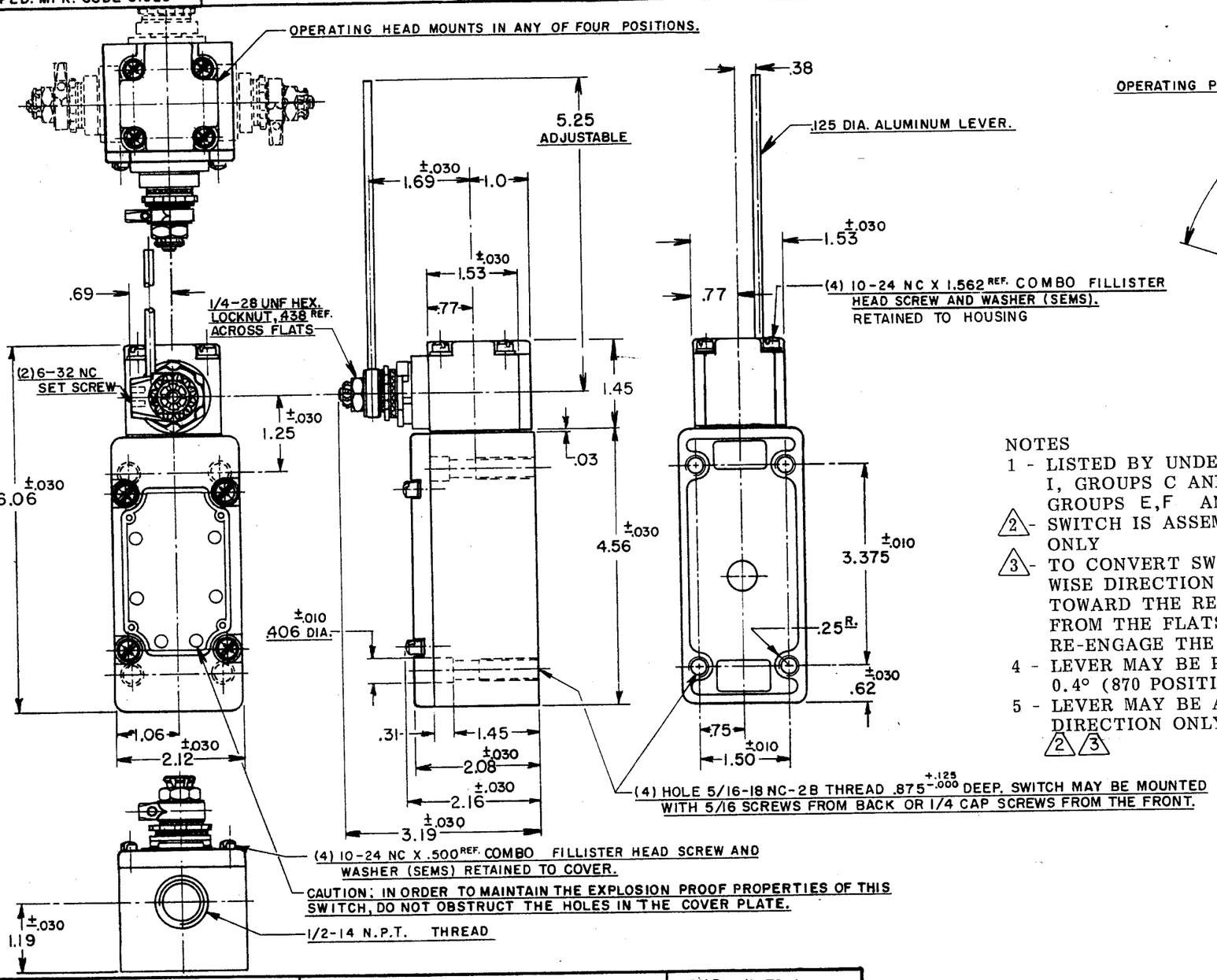

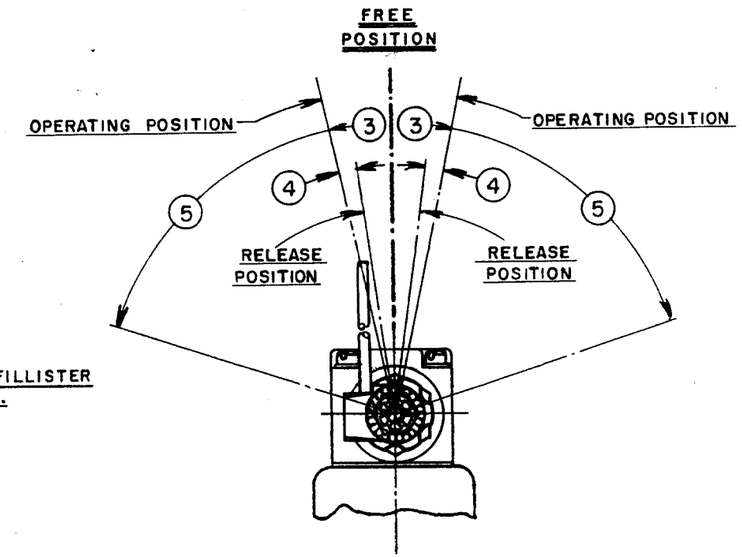

NOTES

1 - LISTED BY UNDERWRITERS LABORATORY, INC. FOR USE IN CLASS I, GROUPS C AND D VAPOR-AIR ATMOSPHERE, AND CLASS 2, GROUPS E,F AND G DUST-AIR ATMOSPHERE

2 - SWITCH IS ASSEMBLED FOR ACTUATION IN CLOCKWISE DIRECTION ONLY

3 - TO CONVERT SWITCH FOR ACTUATION IN THE COUNTER-CLOCKWISE DIRECTION ONLY, REMOVE THE HEAD AND SLIDE THE CAM TOWARD THE REAR OF THE HEAD SUFFICIENTLY TO DISENGAGE FROM THE FLATS ON THE SHAFT. ROTATE THE CAM 180° AND RE-ENGAGE THE CAM WITH THE FLATS ON THE SHAFT

4 - LEVER MAY BE POSITIVELY LOCKED AT INTERVALS OF APPROX 0.4° (870 POSITIONS)

5 - LEVER MAY BE ADJUSTED TO ACTUATE IN THE CLOCKWISE DIRECTION ONLY OR THE COUNTER-CLOCKWISE DIRECTION ONLY 2 3

7 - IT IS ESSENTIAL THAT THE CONDUIT OPENING BE PROPERLY SEALED IN ORDER TO MAINTAIN THE EXPLOSION PROOF PROPERTIES

CHARACTERISTICS

OPERATING FORCE	5 OZ. MAX.
FULL OVERTRAVEL FORCE	7 OZ. MAX.
RELEASE FORCE	3/4 OZ. MIN.
PRETRAVEL	(3) 12° MAX.
DIFFERENTIAL TRAVEL	(4) 4° MAX.
OVERTRAVEL	(5) 60° MIN.

SWITCH—BASIC REPLACEMENT — IMK5

ELECTRICAL DATA

CONTACT ARRANGEMENT
S. P. D. T.

20A-120, 240 OR 480 VAC; 3/4 H.P.-120 VAC
1 1/2 H.P.-240 VAC; 1/2 A-115 VDC; 1/4 A-230 VDC
PILOT DUTY 720VA-HEAVY DUTY
600 VAC MAX

SCALE 1/2 TO 1
DO NOT SCALE PRINT

UNLESS OTHERWISE SPECIFIED
DIMENSIONS ARE IN INCHES
TOLERANCES ARE:

ONE PLACE	(.0)	±.030
TWO PLACE	(.00)	±.015
THREE PLACE	(.000)	±.005
ANGLES		±1°

WEIGHT

DRAWN J A P 26 SEPT 83
CHECK
CHECK 30 SEPT 83
CHECK C E C
74-96.3

Downloaded from Arrow.com.