15-150 W Heater *SHG Series*



Features

- Designed to provide enclosed electronic, pneumatic, hydraulic and mechanical equipment with protection from low temperatures, condensation and corrosion.
- The PTC (Positive Temperature Coefficient) heater unit maintains a stable temperature environment within enclosures, allowing critical components to perform with consistent reliability for longer periods.
- Push connectors for quick and easy wiring
- Used in combination with Normally Closed Thermostat or Humidistat

Accessories

- Temperature Controls and Accessories

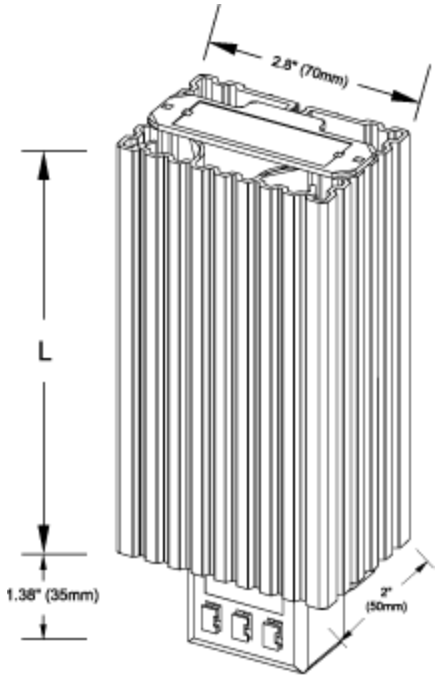

Part No.	Watts[1]	Max. Current[2]	L
SHG14000	15W	1.1A	2.60
SHG14001	30W	1.2A	2.60
SHG14003	45W	1.8A	2.60
SHG14005	60W	2.5A	5.50
SHG14006	75W	4.5A	5.50
SHG14007	100W	5.0A	5.50
SHG14008	150W	7.5A	8.70

[1] At 68oF (20oC) ambient temperature

[2] Inrush current

Operating Voltage:	AC 110- - 250 V
Heating Element:	PTC resistor, self regulating surface temperature
Heating Body:	Anodized extruded aluminum

Downloaded from Arrow.com.

Connection:	Push-type terminals for stranded and solid wire 3 x AWG 20 AWG 16 (0.5 - 1.5 mm2
Mounting:	Easily installed by clip mounting on 35 mm DIN rails (included)
Protection Class:	I, test voltage 1600 V
Protection:	IP20
Approval:	UL Recognized Component, cUL Recognized Component, CE

Tags: **SHG**, **PTC**, **temperature**, **climate**, **heater**, **fan**, **condensation**

Data subject to change without notice.

© 2026. Hammond Manufacturing Ltd. All rights reserved.

Downloaded from Arrow.com.