Downloaded from Arrow.com.

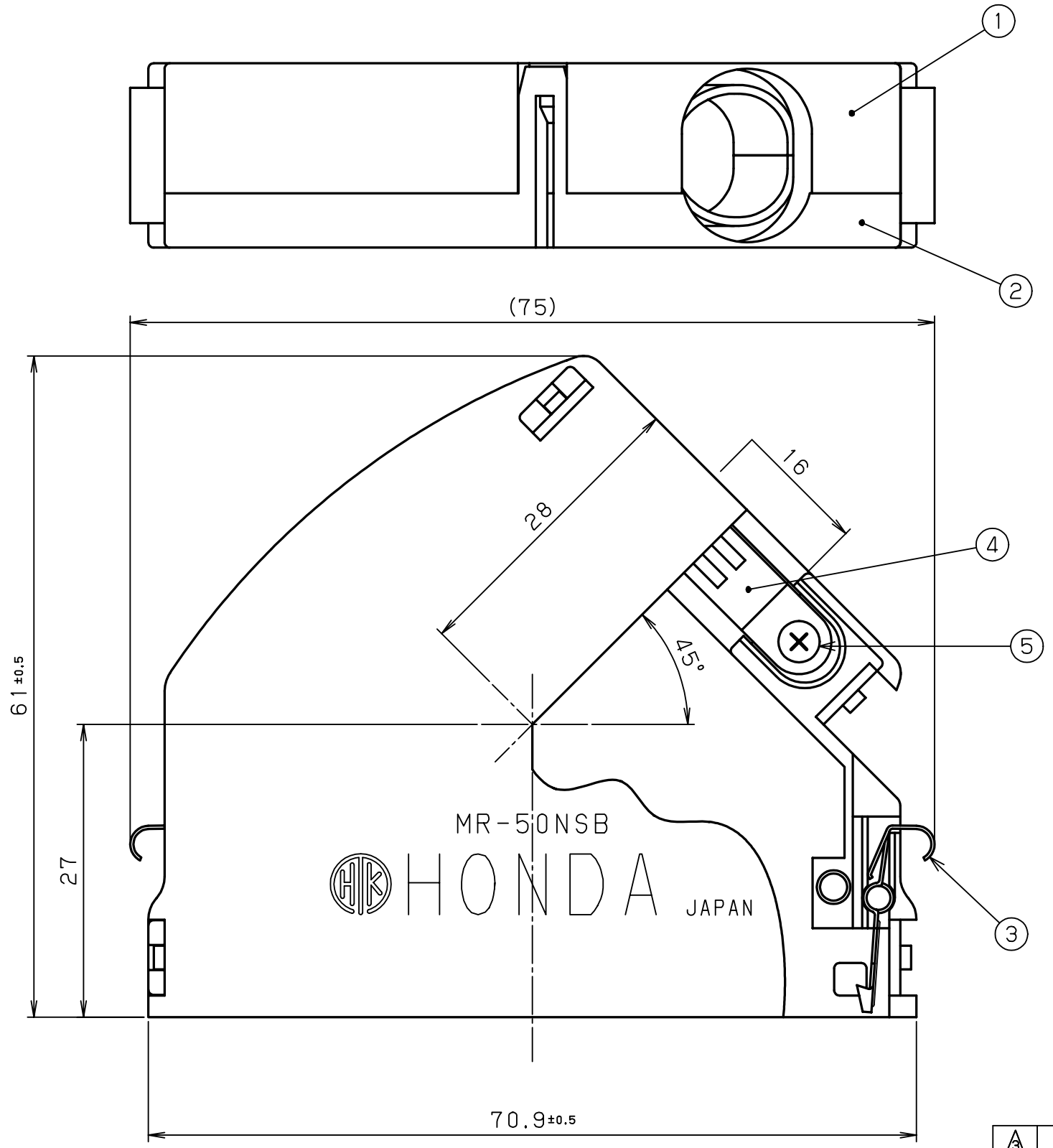

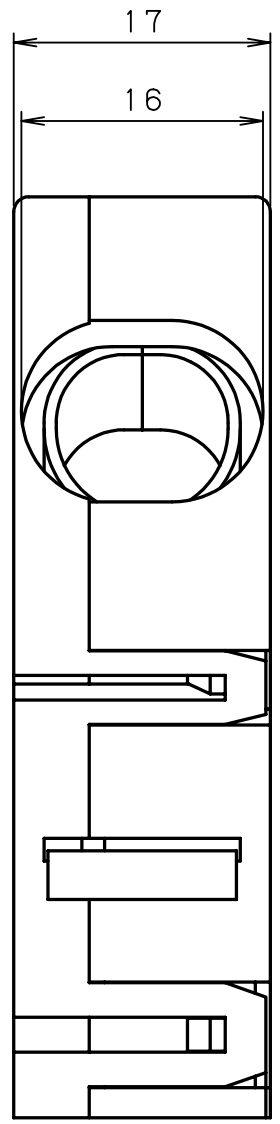

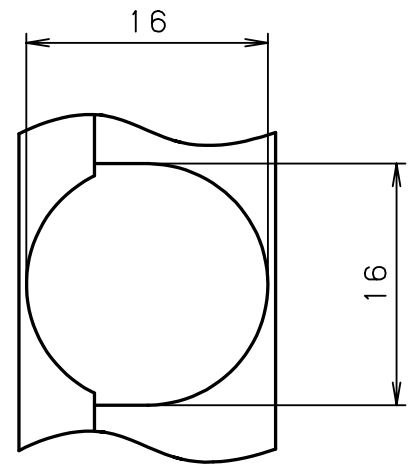

SIZE OF CABLE HOLE

HONDA
PRINT RM
May.31.2004
ISSUED

				No.	PART NAME	MATERIAL	QTY	FINISH	NOTE
				5	SCREW	STEEL	2	NICKEL PLATED	M2.3X8 APPENDED
				4	CABLE CLAMP	STEEL	2	NICKEL PLATED	APPENDED
3				3	SPRING LOCK	STAINLESS STEEL	2	————	APPENDED
2				2	CASE B	ABS	1	————	COLOR:GREY APPENDED
1				1	CASE A	ABS	1	————	COLOR:GREY
LTR.	DATE	BY	REV. DESCRIPT						

DATE	SCALE	UNIT	3RD. A. P
MAY.28.2004	2/1	mm (INCH)	
APP. DATE&REV.			

DR.	DE.	CHK.	CHK.	APP.
M.MIYAZAKI	M.MIYAZAKI	S.IIJIMA	Y.KATO	H.EBIHARA

HONDA TSUSHIN KOGYO CO., LTD.

NAME	MR SERIES 50 CONTACTS SKEW CASES (RoHS)
PART NO.	MR-50NSB+

ID= MR-50NSB+ E0