Sep.1.2026 Copyright 2026 HIROSE ELECTRIC CO., LTD. All Rights Reserved.
In case of consideration for using Automotive equipment / device which demand high reliability, kindly contact our sales window correspondents.

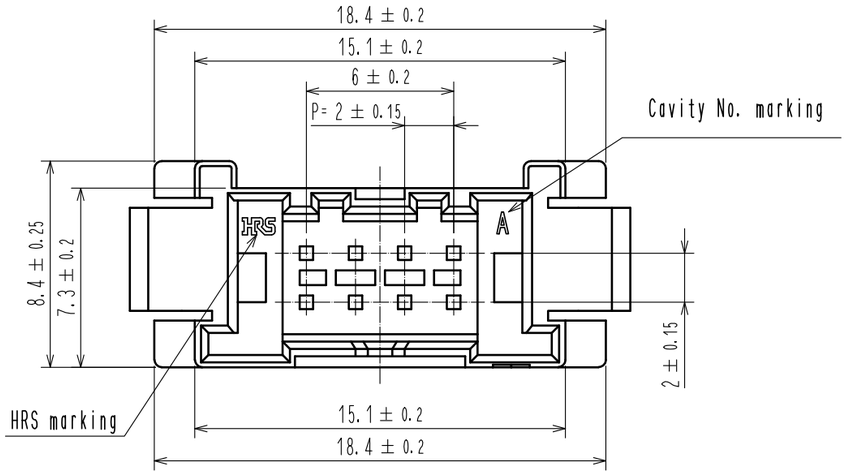

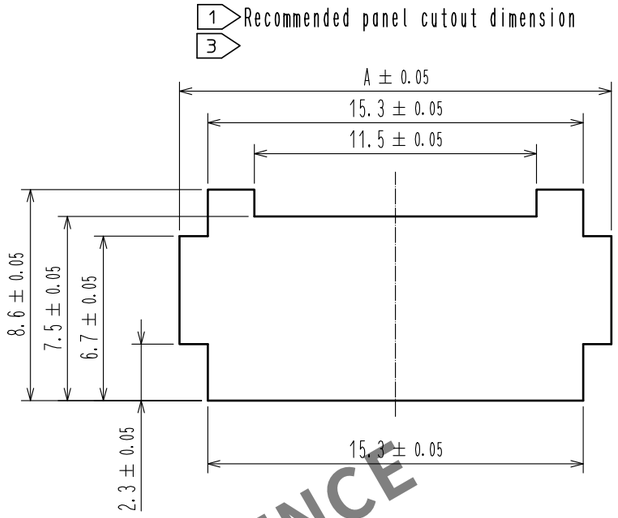

2

Panel thickness	A
0.5~0.8	17.6
0.9~1.3	18.1
1.4~1.8	18.5
1.9~2.3	18.9

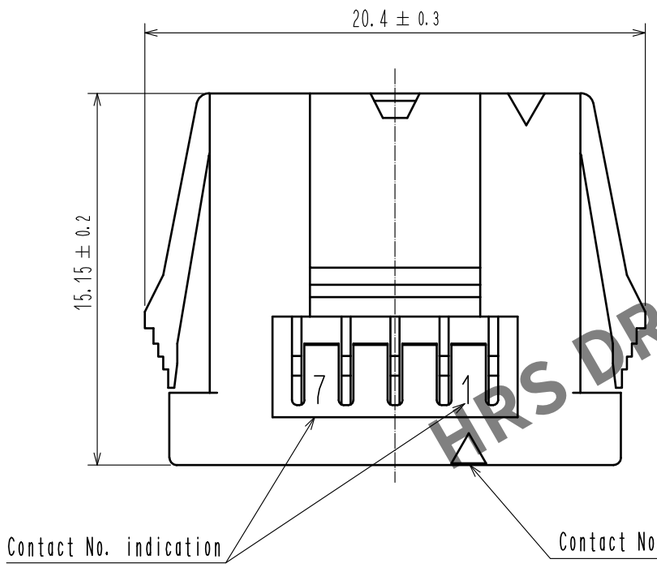

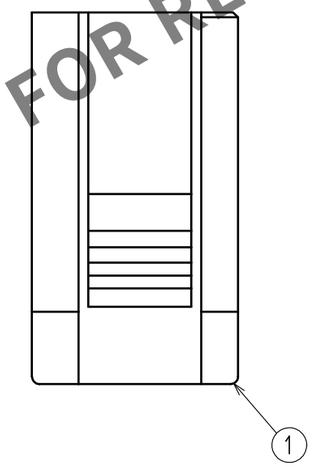

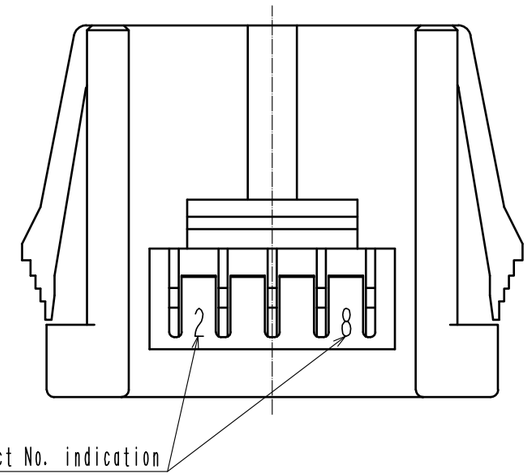

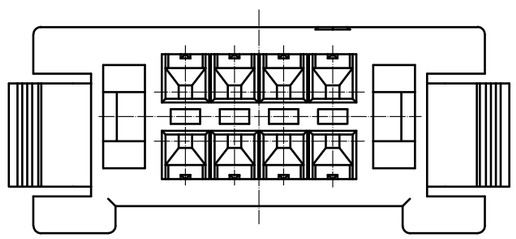

Note 1 Please use non-radius side for the panel hooking area.
2 Applicable panel thicknessing is 2.3 to 0.5 mm.
3 Consult hirose for the other panel cutout designs than recommended one.
4. Per pack : 100 pieces.
⚠1 5. UL(File No.E52653),
C-UL(File No.E52653) authorization article.

NO.	MATERIAL	FINISH , REMARKS
1	PBT	UL94V-0, BLAC

UNITS	SCALE		COUNT	DESCRIPTION OF REVISIONS	DESIGNED	CHECKED	DATE
mm	4 : 1	⚠1	1	DIS-H-00004537	TS.MIYAKI	HS.OKAWA	20181221

HIROSE ELECTRIC CO., LTD.

APPROVED	HS.OKAWA	20160601
CHECKED	YN.TAKASHITA	20160601
DESIGNED	TT.OHSAKO	20160601
DRAWN	TT.OHSAKO	20160601

DRAWING NO.	EDC-366284-00-00
PART NO.	DF51-8DEP-2C
CODE NO.	CL543-5073-0-00 ⚠1 1/1

FORM HC0011-5-7

HRS DRAWING FOR REFERENCE

Downloaded from Arrow.com.