Data Sheet | Item Number: 890-1762

h-distribution connector; 3-pole; Cod. B; 1 input; 2 outputs; outputs on one side; 3 locking levers; for flying leads; light green

https://www.wago.com/890-1762

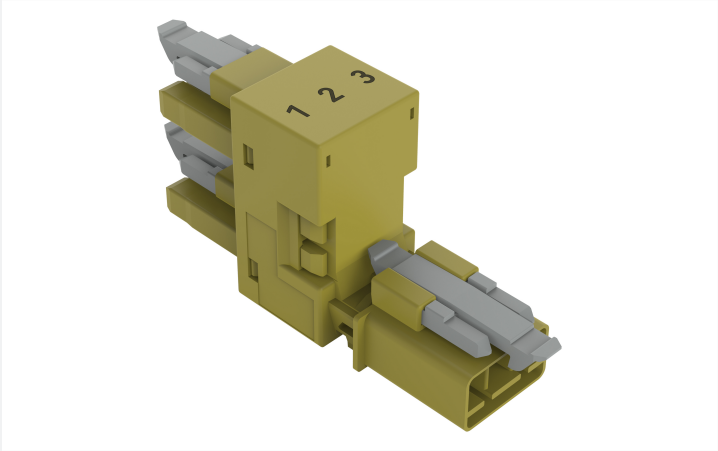

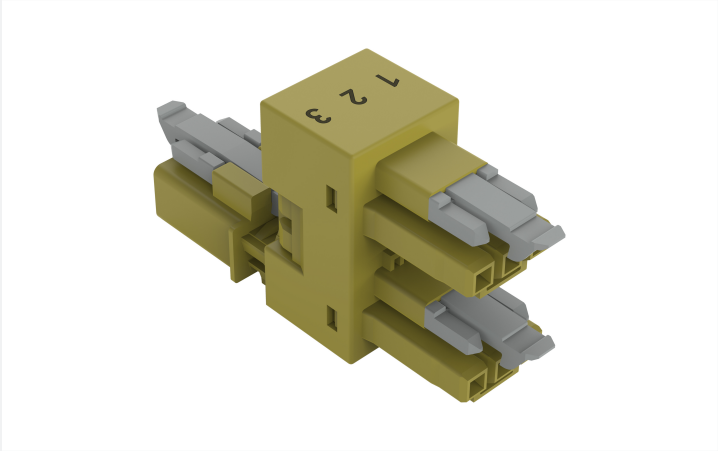

Color: light green

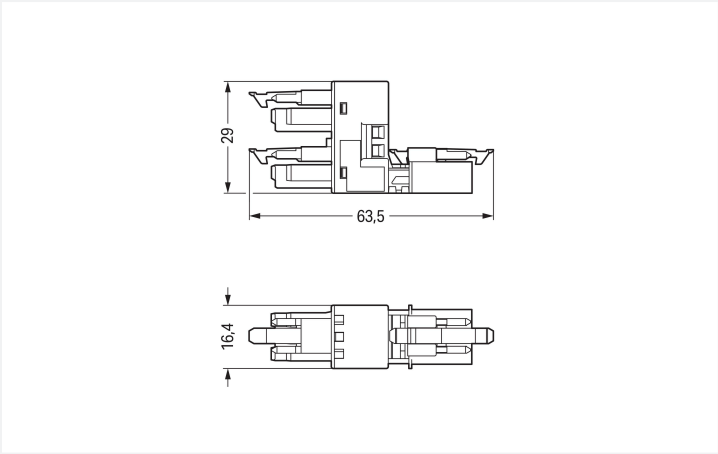

Dimensions in mm

Distribution connector *WINSTA*® MINI B coding

The *WINSTA*® MINI distribution connector B coding is the pluggable solution for your application in control cabinets, on PCBs or for lighting connections. Whether on PCBs, in control cabinets or for connecting lights – pluggable installation connectors from WAGO allow you to make connections according to many different requirements in no time flat. The mechanical coding and color coding of the pluggable installation connector ensure error-free installation of the individual components – including protection against mismating. Solutions like the *WINSTA*® MINI pluggable installation connectors with B coding are appropriate for applications related to process control, for example, for lighting or in data networks. Thanks to its particularly minimal dimensions, our *WINSTA*® MINI Pluggable Connection System with Push-in CAGE CLAMP® spring pressure connection technology is especially suitable in very restricted spaces, i.e., for installations when very little room is available.

Lower costs through fast commissioning and elimination of service expenses – solutions from *WINSTA*® MINI

The WINSTA® Pluggable Connection System is ideally tailored to the strict requirements of building installation. It makes electrical installation pluggable, and thus more efficient, more reliable, and error-free. Using this pre-assembled system decreases assembly times and installation errors at the construction site. Enjoy the benefits of the pluggable version of our maintenance-free spring pressure connection technology too! Plan your installation with with protection against mismating from WAGO.

- effective protection against mismating
- compact design for conductors with a cross-section up to 1.5 mm²
- with B coding for use in process automation, such as lighting technology, among other examples

Downloaded from Arrow.com.

- custom-engineered solutions
- convenient installation and commissioning

Notes

General safety information	1. Only to be used by a qualified electrician or by a person electrically instructed for the task (EIP per DIN VDE 0105-100). 2. Do not install while energized or under load. 3. Use only for its intended purpose. 4. Observe applicable national regulations, standards and directives. 5. Observe the technical specifications of the products. 6. Ensure correct polarity assignment. 7. Do not use damaged or contaminated components. 8. Observe conductor types, conductor cross-sections, strip lengths and cable diameters. 9. Insert conductors up to the stop. 10. Use only with locking lever and strain relief. 11. Use original accessories only. **To be sold only with installation instructions!**
Variants:	Other pole markings Other versions (or variants) can be requested from WAGO Sales or configured at https://configurator.wago.com/.

Electrical data

Ratings per	IEC/EN 60664-1		
Overvoltage category	III	III	II
Pollution degree	3	2	2
Nominal voltage	250 V	-	-
Rated impulse withstand voltage	4 kV	-	-
Rated current	16 A	-	-

Ratings per IEC/EN – Notes	
Rated current (note)	13 A for 3-pole load

Approvals per	UL 1977
Rated voltage	600 V
Rated current	14 A

General information	
Note on contact resistance	approx. 1 mΩ of contact resistance approx. 0.25 mΩ contact transition plug/socket

Connection Data

Total number of potentials	3

Connection 1	
Pole number	3
Coding	B

Physical data

Pin spacing	4.4 mm / 0.173 inches
Width	16.4 mm / 0.646 inches
Height	29 mm / 1.142 inches
Depth	63.5 mm / 2.5 inches

Mechanical data

Use	Control technology
Variable coding	No
Marking	1 2 3
Potential marking	1 2 3
Mating force of a plug-in connection	Approx. 20 … 70 N (depending on pole number)
Retention force of a plug-in connection	When locked: > 80 N
Unmating force of a plug-in connection	Unlocked: approx. 20 … 70 N (depending on pole number)
Number of mating cycles	200, without resistive load
Type of distribution box	h-distribution connector, outputs at one end
Protection type	IP20; IP40 when mated

Continued on next page
Downloaded from Arrow.com.

Mechanical data

Suitable	for flying leads

Plug-in connection

Mismating protection	Yes
Note on mismating protection	All *WINSTA*® components are 100% protected against mismating when: a.) plugging different numbers of poles b.) plugging while rotated 180 c.) plugging while laterally staggered d.) plugging one pole
Locking lever	Yes
Locking of plug-in connection	Locking lever
Note on locking system	All connectors for mounted installations (snap-in versions for lighting fixtures or devices, all types of PCB and distribution connectors) are factory-equipped with locking levers to ensure plugs and sockets are securely locked. Additional locking levers are only required for flying leads (plug/socket).
Number of locking levers	3

Material data

Note (material data)	Information on material specifications can be found here
Color	light green
Material group	I
Insulation material (main housing)	Polyamide (PA66)
Flammability class per UL94	V0
Contact material	Copper or copper alloy; surface-treated
Contact Plating	Tin
Fire load	0.217 MJ
Weight	13.9 g

Environmental requirements

Processing temperature	-5 … +40 °C
Continuous operating temperature	-35 … +85 °C
Note on continuous operating temperature	Insulating parts for temperatures ≤ 105 °C

Commercial data

Product Group	20 (Winsta)
PU (SPU)	50 pcs
Packaging type	Box
Country of origin	DE
GTIN	4050821530749
Customs tariff number	85366990990

Product Classification

UNSPSC	39121406
eCl@ss 10.0	27-44-06-03
eCl@ss 9.0	27-44-06-03
ETIM 9.0	EC002567
ETIM 10.0	EC002567
ECCN	NO US CLASSIFICATION

Downloaded from Arrow.com.

Environmental Product Compliance

RoHS Compliance Status	Compliant,No Exemption

Approvals / Certificates

General approvals

Approval	Standard	Certificate Name
CB DEKRA Certification B.V.	IEC 61984	NL-64351
CB DEKRA Certification B.V.	EN 61984	71-112993
cURus Underwriters Laboratories Inc.	UL 1977	E45171
KEMA/KEUR DEKRA Certification B.V.	EN 60320	2148952.04

Declarations of conformity and manufacturer's declarations

Approval	Standard	Certificate Name
EU-Declaration of Conformity WAGO GmbH & Co. KG	-	-
UK-Declaration of Conformity WAGO GmbH & Co. KG	-	-

Approvals for marine applications

Approval	Standard	Certificate Name
DNV GL Det Norske Veritas, Germanischer Lloyd	-	TAE00001Z6
PRS Polski Rejestr Statków	-	TE/1096/880590/23

Downloads

Environmental Product Compliance

Compliance Search

Environmental Product Compliance 890-1762

Documentation

Bid Text

890-1762	19.02.2019	xml 2.90 KB
890-1762	02.12.2014	doc 22.50 KB

Downloaded from Arrow.com.

CAD/CAE-Data

CAD data	CAE data
2D/3D Models 890-1762	WSCAD Universe 890-1762
	ZUKEN Portal 890-1762

1 Compatible Products

1.1 System counterpart

1.1.1 Cable assembly

Item No.: 891-8993/205-105
pre-assembled connecting cable; Eca; Plug/open-ended; 3-pole; Cod. B; 1 m; 1,00 mm²; light green

Item No.: 891-8993/105-105
pre-assembled connecting cable; Eca; Socket/open-ended; 3-pole; Cod. B; 1 m; 1,00 mm²; light green

Item No.: 891-8993/005-105
pre-assembled interconnecting cable; Socket/plug; 3-pole; Cod. B; 1 m; 1,00 mm²; light green

1.1.2 Female connector/socket



Item No.: 890-263
Socket; 3-pole; Cod. B; 1,50 mm²; light green

1.1.3 Male connector/plug



Item No.: 890-273
Plug; 3-pole; Cod. B; 1,50 mm²; light green

1.2 Required Accessories

1.2.1 Installation

1.2.1.1 Mounting accessories



Item No.: 890-623
Mounting plate; 3-pole; for distribution connectors; Plastic; black



Item No.: 890-673
Mounting plate; 3-pole; for distribution connectors; Plastic; white

Downloaded from Arrow.com.

Installation Notes

Installation



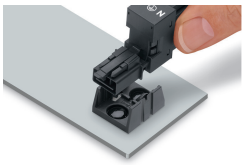

Secure the mounting plate via pins.

Downloaded from Arrow.com.