300 Watt Industrial

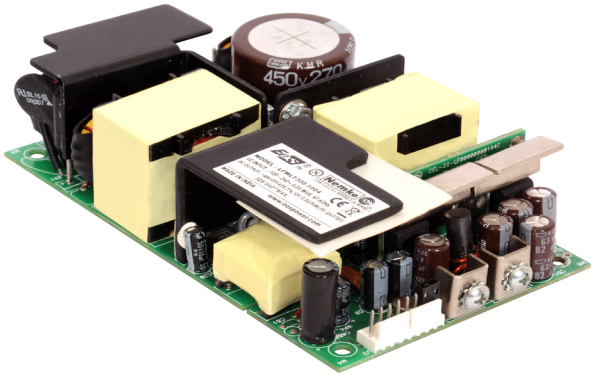

Features

- 3 x 5 x 1.5 inches
- Wide range AC input
- Remote sense & Remote On/Off
- Power Good & Class 1
- EMI Class B
- CE marked to LVD
- Now IEC/EN/UL62368-1 Compliant NEW
- Approved with metal enclosures/accessories

Electrical Specifications

Input Voltage	90–264 VAC/120–390 VDC, Universal	
Input Frequency	47–63 Hz	
Input Current	120 VAC: 3.2 A max.	230 VAC: 1.65 A max.
No Load Power	0.8 W	
Inrush Current	120 VAC: 35 A max.	230 VAC: 65 A max.
Leakage Current	120 VAC: < 150 µA	230 VAC: < 300 µA
Efficiency	120 VAC: 88% typical	230 VAC: 92% typical
Hold-up Time	120 VAC: 10 ms	230 VAC: 10 ms
Power Factor	120 VAC: 0.98	230 VAC: 0.95
Output Power	200 to 325 W	
Line Regulation	+/–0.5%	
Load Regulation	+/–2%	
Transient Response	< 10%, 50% to 100% load change, 50 Hz, 50% duty cycle, 0.1 A/µs, recovery time < 5 ms	
Rise Time	< 100 ms	
Set Point Tolerance	+/–1%	
Output Adjustability	+/–3%	
Over Current Protection	110 to 150%	
Over Voltage Protection	110 to 150%, autorecovery	
Short Circuit Protection	Short term, autorecovery	
Over Temperature Protection	110°C primary heat sink, autorecovery	
Switching Frequency	PFC converter: Fixed, 80 kHz typical Resonant converter: Variable, 35–250 kHz; 90 kHz typical	
Operating Temperature	–20 to +70°C, refer derating curve; –20 to 0°C, start-up is guaranteed	
Storage Temperature	–40 to +85°C	
Relative Humidity	95% Rh, noncondensing	
Altitude	Operating: 10,000 ft.; Nonoperating: 40,000 ft.	
MTBF	1.77m Hours, Telcordia -SR332-issue 3	
Isolation Voltage	Input to Output 4000 VAC/VDC	
Cooling	Convection: 140W max (5V model) 200W max (12V, 15V, 24V, 30V and 48V models) With 300LFM : 200W max (5V model) 300W max (12V and 15V models) 325W max (24V, 30V and 48V models) Refer de-rating curves to determine output power over the entire operating temperature range	

Downloaded from Arrow.com.

Model Number	Power Supply Unit & its Installation Type	Power	Voltage	Max. Load (Convection)	Max.Load (300 LFM)
LFWLT300-1000-CK	In CK cover Kit	98 W	5 V	19.6 A	-
LFWLT300-1000	In Open Frame	200 W	5 V	28.0 A	40.0 A
LFWLT300-1000-L	With L Bracket	200 W	5 V	28.0 A	40.0 A
LFWLT300-1000-B	With Base Plate	200 W	5 V	28.0 A	40.0 A
LFWLT300-1000-U	With U channel	200 W	5 V	28.0 A	40.0 A
LFWLT300-1001-CK	In CK cover Kit	140W	12 V	11.67 A	-
LFWLT300-1001	In Open Frame	300 W	12 V	16.67 A	25.0 A
LFWLT300-1001-L	With L Bracket	300 W	12 V	16.67 A	25.0 A
LFWLT300-1001-B	With Base Plate	300 W	12 V	16.67 A	25.0 A
LFWLT300-1001-U	With U channel	300 W	12 V	16.67 A	25.0 A
LFWLT300-1002-CK	In CK cover Kit	140W	15 V	9.33 A	-
LFWLT300-1002	In Open Frame	300 W	15 V	13.33 A	20.0 A
LFWLT300-1002-L	With L Bracket	300 W	15 V	13.33 A	20.0 A
LFWLT300-1002-B	With Base Plate	300 W	15 V	13.33 A	20.0 A
LFWLT300-1002-U	With U channel	300 W	15 V	13.33 A	20.0 A
LFWLT300-1003-CK	In CK cover Kit	140W	24 V	5.83 A	-
LFWLT300-1003	In Open Frame	325 W	24 V	8.33 A	13.54 A
LFWLT300-1003-L	With L Bracket	325 W	24 V	8.33 A	13.54 A
LFWLT300-1003-B	With Base Plate	325 W	24 V	8.33 A	13.54 A
LFWLT300-1003-U	With U channel	325 W	24 V	8.33 A	13.54 A
LFWLT300-1004-CK	In CK cover Kit	140 W	48 V	2.92 A	-
LFWLT300-1004	In Open Frame	325 W	48 V	4.17 A	6.77 A
LFWLT300-1004-L	With L Bracket	325 W	48 V	4.17 A	6.77 A
LFWLT300-1004-B	With Base Plate	325 W	48 V	4.17 A	6.77 A
LFWLT300-1004-U	With U channel	325 W	48 V	4.17 A	6.77 A
LFWLT300-1005-CK	In CK cover Kit	140 W	30 V	4.67 A	-
LFWLT300-1005	In Open Frame	325 W	30 V	6.67 A	10.83 A
LFWLT300-1005-L	With L Bracket	325 W	30 V	6.67 A	10.83 A
LFWLT300-1005-B	With Base Plate	325 W	30 V	6.67 A	10.83 A
LFWLT300-1005-U	With U channel	325 W	30 V	6.67 A	10.83 A

Pin Connections		
J1	Pin 1	AC LINE
	Pin 2	AC NEUTRAL
Spade Connector (J4)		EARTH
J2	Pin 1	RTN
	Pin 2	V1
J3	Pin 1	REMOTE ON/OFF
	Pin 2	RTN
	Pin 3	VFAN (+12 V/0.5 A)
	Pin 4	–VE REMOTE SENSE
	Pin 5	VSTBY (+5 V/2 A, +/-5%)
	Pin 6	+VE REMOTE SENSE
	Pin 7	RTN
	Pin 8	POWER GOOD

Notes

1. Peak current rating on main output is 120% of max., lasting < 30 s with a maximum 10% duty cycle.
2. Ripple is peak to peak with 20 MHz bandwidth and 10 µF (Electrolytic capacitor) in parallel with a 0.1 µF capacitor at rated line voltage and load ranges.
3. Combined output power of main output, fan supply and standby supply shall not exceed max. power rating.
4. Standby output voltage tolerance including set point accuracy, line and load regulation is +/–10%. Ripple and noise is less than 5%.
5. Fan supply output voltage tolerance including set point accuracy, line and load regulation is +/–30% and needs min. 1% load on main output to be within regulation band. Ripple and noise is less than 10%.
6. Specifications are for nominal input voltage, 25°C unless otherwise stated.
7. PSU is supplied with J3 housing, pin–1 and pin–2 shorted to enable main output without remote on/off feature.
8. Derate output power linearly to 80% from 90 VAC to 80 VAC input.
9. Power good signal cannot be used as a current source. Internal pull up resistor from PG signal to 5V is 10K. It is recommended to use external transistor if intended to source current.
10. The de-rating curves are valid for input voltages of 115VAC to 264VAC. Below 115VAC to 90VAC the convection rating is 180 Watts maximum.
11. When used in Cover Kit, de-rate output power to 70 % under all operating conditions.

Innovations in Power

Downloaded from Arrow.com.

Mechanical Specifications	
AC Input Connector (J1)	Molex: 26–60–4030 Mating: 09–50–3031; Pins: 08–50–0106
EARTH (J4)	Molex: 19705–4301 Mating: 190030001
DC Output Connector (J2)	6-32 inches Screw Pan HD Mating: Designed to accept Ring Tongue Terminal AMP : 8-31886-1, wherein one 16 AWG(max) wire can be crimped. Note : One Ring Tongue Terminal with 16 AWG is recommended for current upto 11A only. Use multiple tongue terminals with wire for more current.
Signal Connector (J3)	Molex: 22–23–2081 Mating: 22–01–2087; Pins: 08–50–0113
Dimensions	3.0 x 5.0 x 1.5 inches (76.2 x 127.0 x 38.0 mm)
Weight	450 g

EMC		
Parameter	Conditions/Description	Criteria
Conducted Emissions	EN55032-B, CISPR22-B, FCC PART15-B	Pass
Radiated Emissions	EN 55032 A Level B with external core (King core K5B RC 25x12x15-M in input cable)	Pass
Input Current Harmonics	EN 61000-3-2	Class D
Voltage Fluctuation and Flicker	EN 61000-3-3	Pass
ESD Immunity	EN 61000-4-2	Level 3, Criterion A
Radiated Field Immunity	EN 61000-4-3	Level 3, Criterion A
Electrical Fast Transient Immunity	EN 61000-4-4	Level 3, Criterion A
Surge Immunity	EN 61000-4-5	Level 3, Criterion A
Conducted Immunity	EN 61000-4-6	Level 3, Criterion A
Magnetic Field Immunity	EN 61000-4-8	Level 3, Criterion A
Voltage dips, interruptions	EN 61000-4-11	Criterion A & B

Safety	
CE Mark	Complies with LVD Directive
Approval Agency	Nemko, UL
Safety Standard(s)	IEC 62368-1:2014, EN 62368-1:2014;A11 , UL 62368-1 and CAN/CSA C22.2 No. 62368-1-14
Safety File Number(s)	CB : NO107429, Nemko : P19223724, UL : 20191011-E150565

Signal	
Power Good Signal	TTL signal goes high after main output is within regulation band, delay is 0.1 to 0.3 s (see note)
Remote Sense	Compensates for 200 mV drop
Remote on/off	To turn on PSU short remote pin to ground

Downloaded from Arrow.com.

Derating Curve

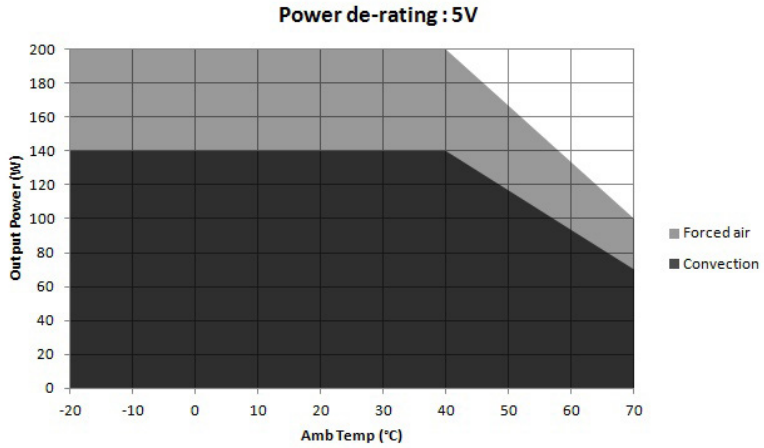

Convection load: 140W up to 40 °C
De-rate above 40 °C @ 1.67% per °C

Forced air cooled load : 200W up to 40°C
De-rate above 40 °C @ 1.67% per °C

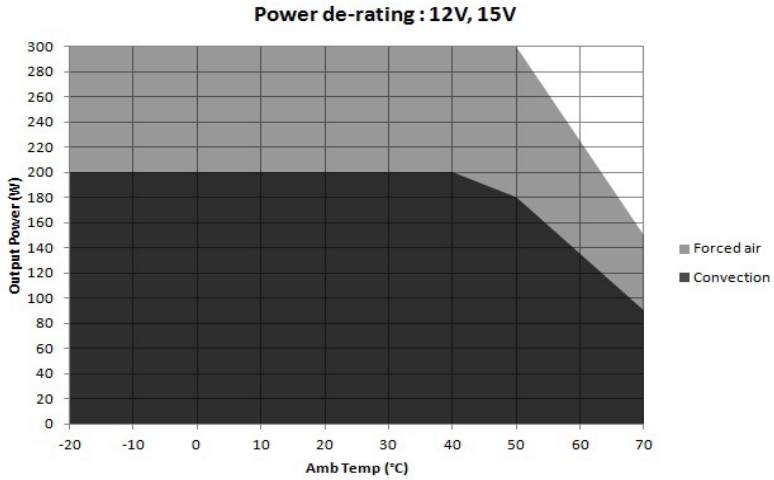

Convection load: 200W up to 40 °C
De-rate between 40-50 °C @ 1% per °C
De-rate above 50 °C @ 2.5% per °C

Forced air cooled load : 300W up to 50°C
De-rate above 50 °C @ 2.5% per °C

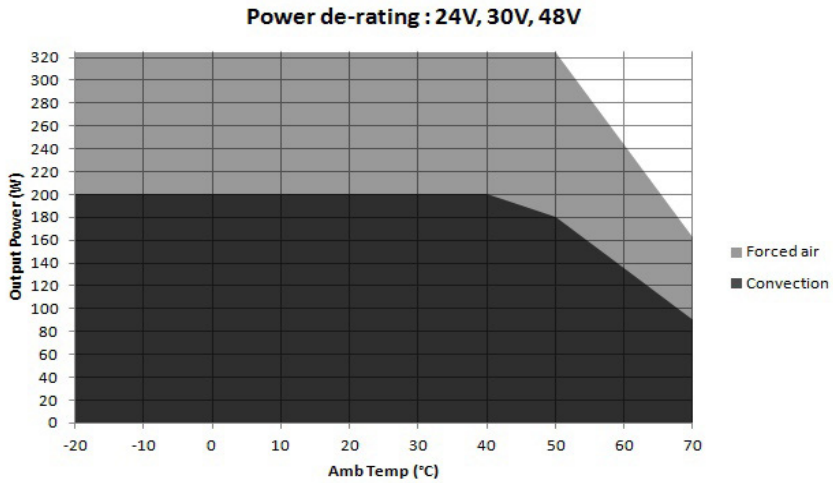

Convection load: 200W up to 40 °C
De-rate between 40-50 °C @ 1% per °C
De-rate above 50 °C @ 2.5% per °C

Forced air cooled load : 325W up to 50°C
De-rate above 50 °C @ 2.5% per °C

Downloaded from Arrow.com.

Mechanical Drawing

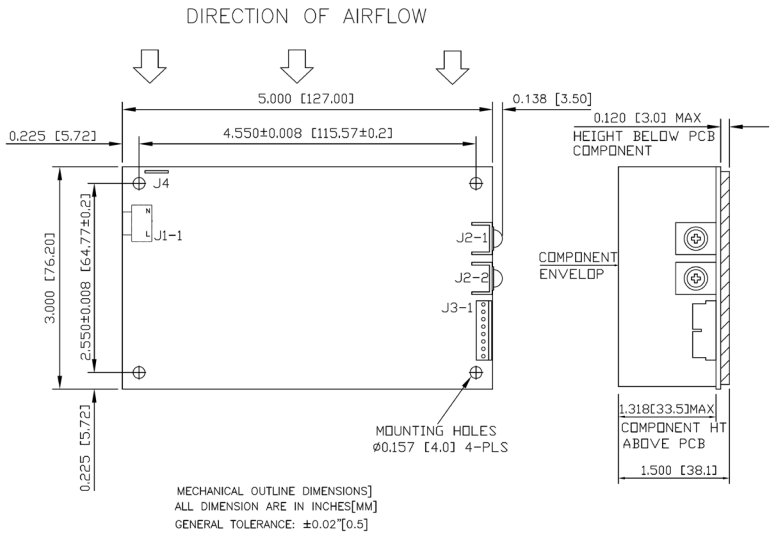

Notes: In case the PCB is mounted in a metal enclosure, using metal hardware ensure the following

1. Stand off, used to mount PCB has OD of 5.4 mm max.
2. Screws, used to fix PCB on stand off, have head dia of 6.0 mm max.
3. Washer, if used, to have dia of 6.5 mm max.

Downloaded from Arrow.com.

Mechanical Drawing

WLT300 SERIES WITH COVER KIT

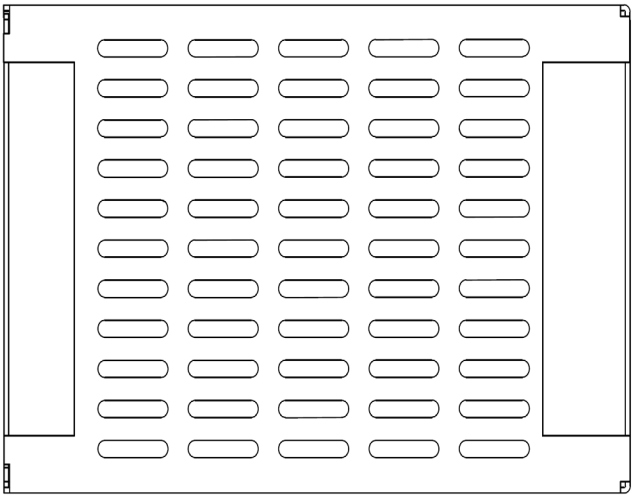

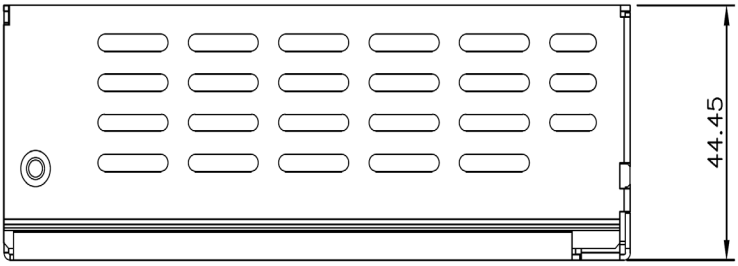

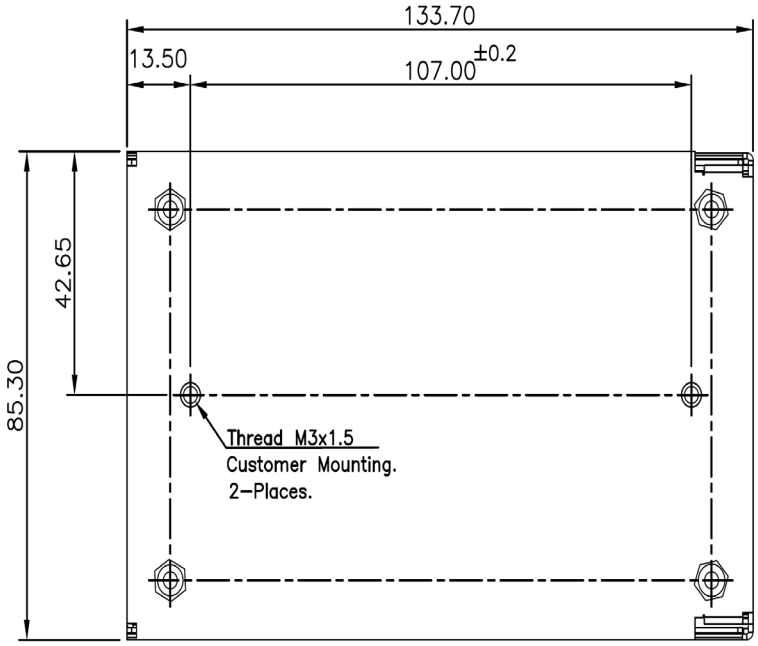

MECHANICAL OUTLINE DIMENSIONS
ALL DIMENSIONS ARE IN MM.
GEN. TOLERANCE: ±1.0 mm

Downloaded from Arrow.com.

Mechanical Drawing

WLT300 SERIES WITH 'L' BRACKET

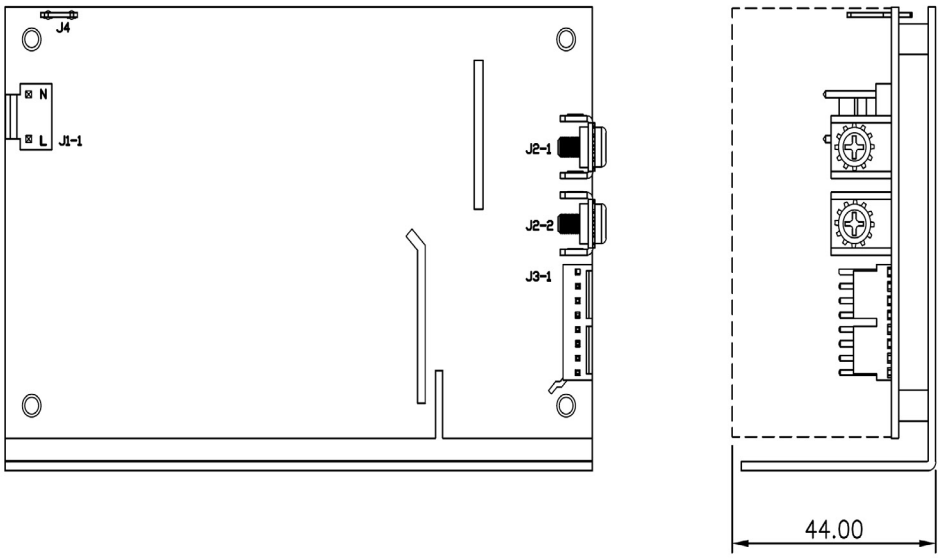

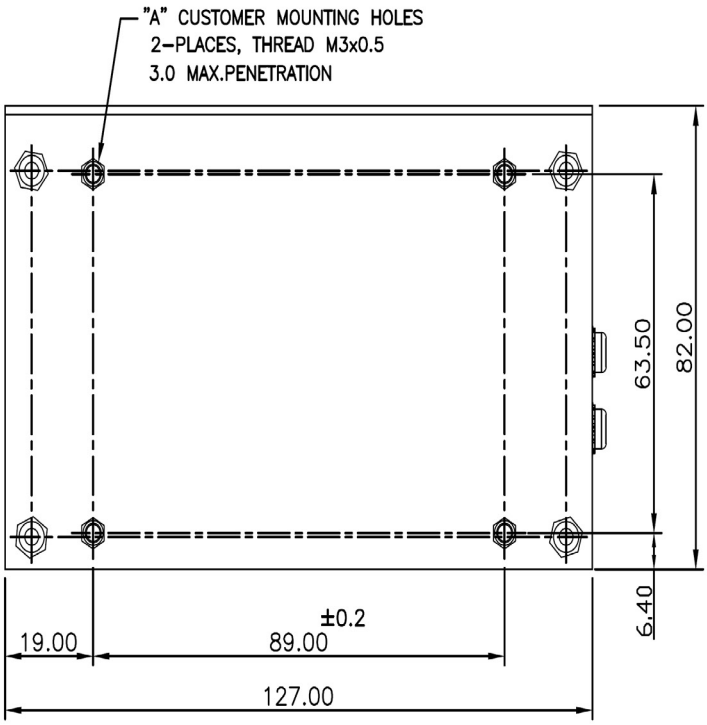

MECHANICAL OUTLINE DIMENSIONS
ALL DIMENSIONS ARE IN MM
GEN.TOLERANCE:+/-0.5 MM

Downloaded from Arrow.com.

Mechanical Drawing

WLT300 SERIES WITH BASE PLATE

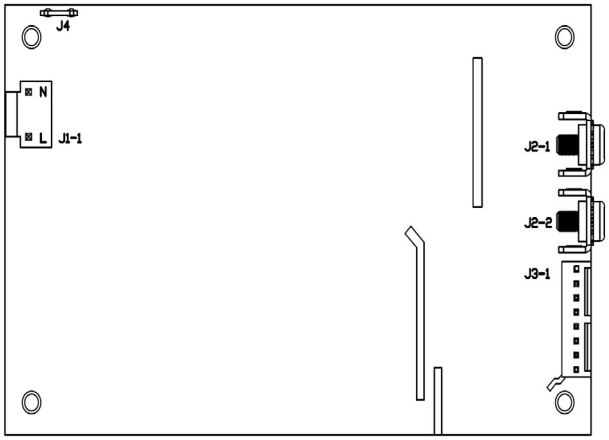

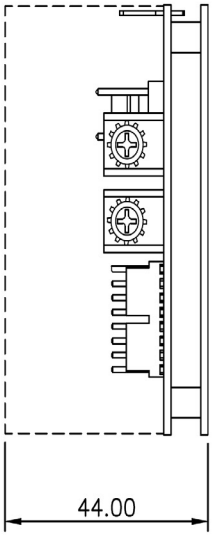

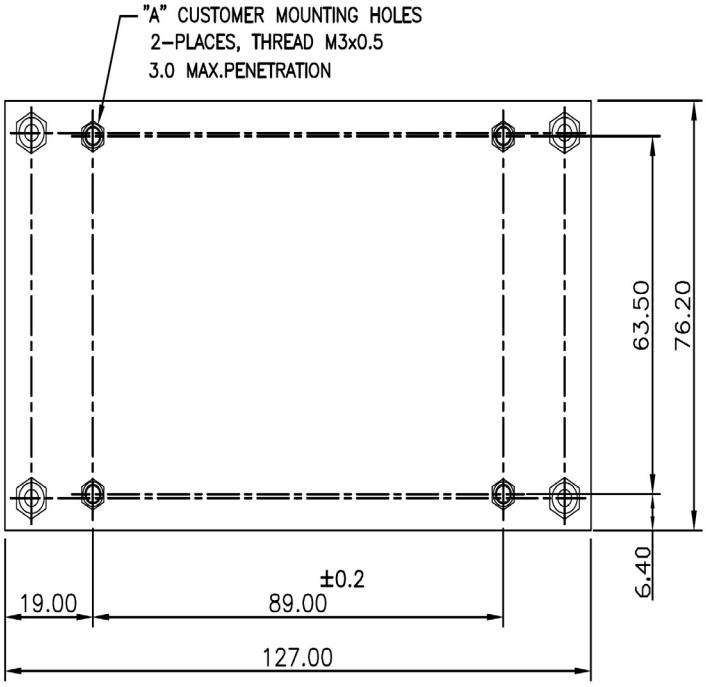

MECHANICAL OUTLINE DIMENSIONS
ALL DIMENSIONS ARE IN MM
GEN.TOLERANCE:+/-0.5 MM

Downloaded from Arrow.com.

Mechanical Drawing

WLT300 SERIES WITH 'U' CHANNEL

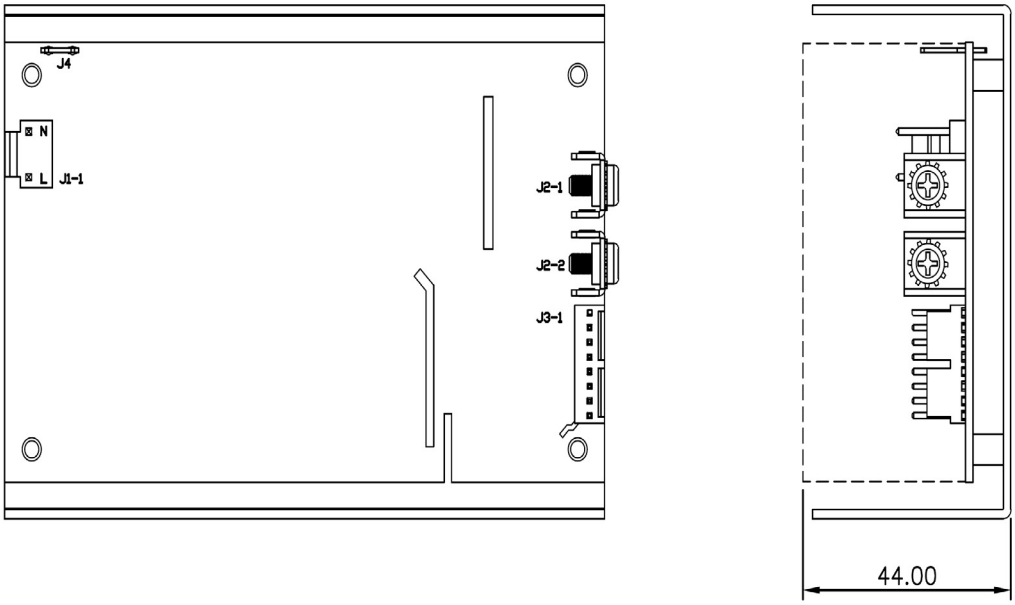

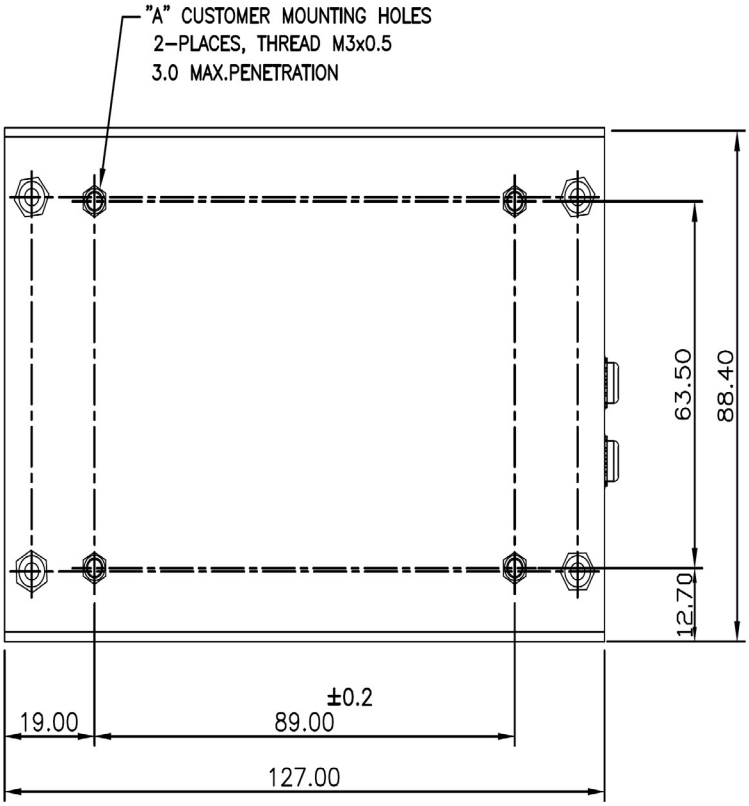

MECHANICAL OUTLINE DIMENSIONS
ALL DIMENSIONS ARE IN MM
GEN.TOLERANCE:+/-0.5 MM

Downloaded from Arrow.com.