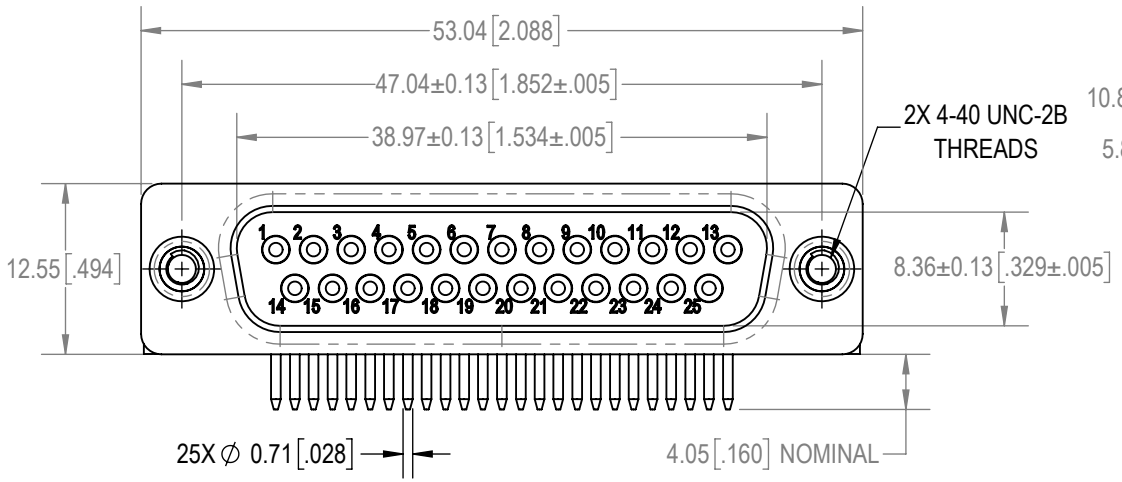

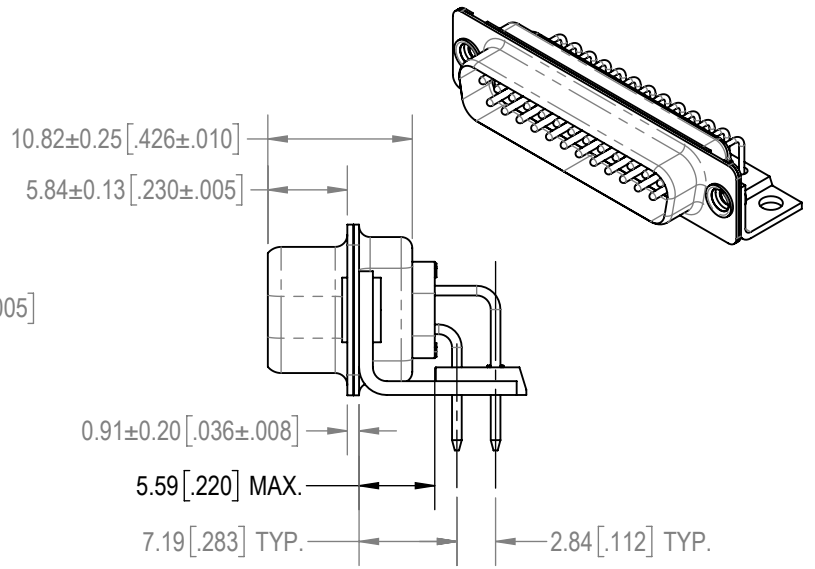

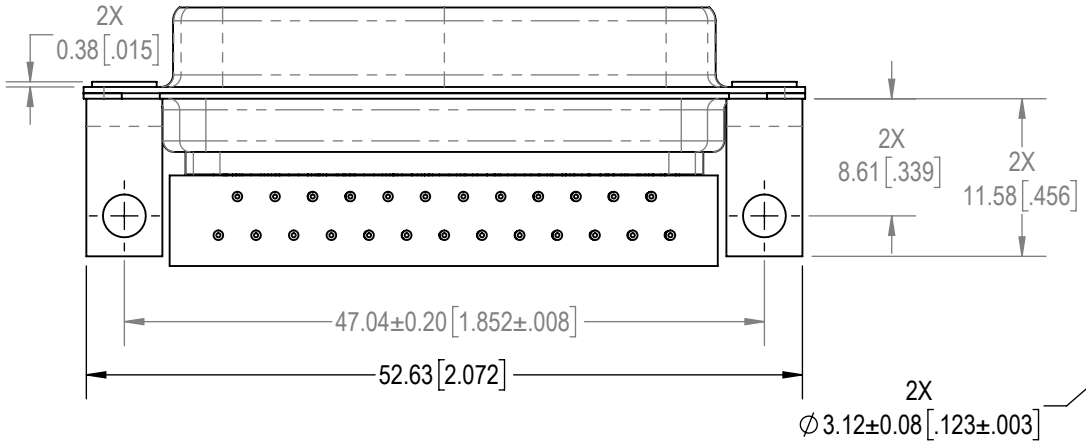

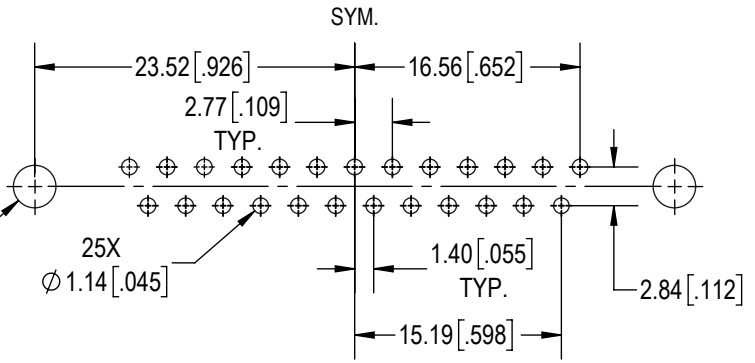

CONTACT HOLE PATTERN

NOTES:

1. MATERIAL AND FINISHES:
   INSULATOR: GLASS FILLED POLYESTER PER ASTM D5927, UL 94V-0, COLOR: BLUE.
   CONTACTS: PRECISION MACHINED COPPER ALLOY, GOLD FLASH OVER NICKEL PLATE.
   SHELLS: STAINLESS STEEL, PASSIVATED.
   SWAGED RIVETS AND MOUNTING BRACKETS: STAINLESS STEEL, PASSIVATED.
   ALIGNMENT BAR : GLASS FILLED POLYESTER, UL 94V-0, BLACK COLOR.
2. DETAILED PRODUCT, MECHANICAL AND ELECTRICAL INFORMATION IS AVAILABLE IN THE LATEST STANDARD DENSITY D-SUB PRODUCT PUBLICATION AT CONNECTPOSITRONIC.COM.
3. CONNECTORS ARE COMPLIANT TO THE CURRENT RoHS DIRECTIVE.

BY: GJ	CHK: SS	3RD ANGLE	POSITRONIC BELIEVES THE DATA ON THE DRAWING TO BE RELIABLE. THE USER EMPLOYS SUCH INFORMATION AT HIS OWN DISCRETION AND RISK. POSITRONIC ASSUMES NO RESPONSIBILITY FOR RESULTS OBTAINED OR DAMAGES INCURRED FROM USE OF SUCH INFORMATION IN WHOLE OR IN PART.
APR: AB	RELEASED DATE: 2024-02-28		
TOLERANCES: ±0.03mm [.001 INCHES]FOR MALE CONTACT MATING DIAMETERS; ±0.08mm [.003 INCHES]FOR CONTACT TERMINATION DIAMETERS; ±0.13mm [.005 INCHES]FOR ALL OTHER DIAMETERS; ±0.38mm [.015 INCHES]FOR ALL OTHER DIMENSIONS; ±5° FOR ALL ANGLES; DIMENSION ARE IN MILLIMETERS [INCHES]		SCALE: NTS	

Positronic® CONNECTPOSITRONIC.COM

PART NUMBER	HDC25M5R700S/AA
SERIES	HDC
TITLE	HDC25M5R700S/AA
CREATED ON:	2024-02-28
SHEET	SHEET 1 OF 1
REV	A

Downloaded from Arrow.com.