CUI Devices is now Same Sky! Learn More

MODEL: SLW-2714892-9A-RA-S-D | DESCRIPTION: SLIDE SWITCH

FEATURES

- DP3T
- shorting
- through hole

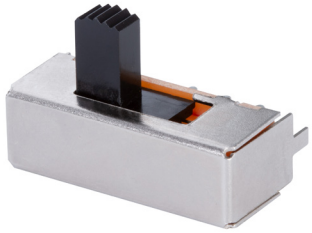

RoHS

SPECIFICATIONS

parameter	conditions/description	min	typ	max	units
rated voltage				50	Vdc
rated current				300	mA
withstanding voltage	for 1 minute		500		Vac
contact resistance	measured at 1 kHz at 100 mA or less			100	mΩ
insulation resistance	at 500 Vdc for 1 minute	100			MΩ
operating force		150	250	350	gf
actuator travel		3.5	4	4.5	mm
operating temperature		-20		70	°C
storage temperature		-25		70	°C
life	at uniform rate of 15~18 cycles per minute, no load		10,000		cycles
vibration	10~55~10 Hz, 1.5 mm amplitude, 2 hours on each XYZ				
flammability rating	see material table				
RoHS	yes				

Notes: 1. All specifications measured at 5~35°C, humidity at 25~85%, under 86~106 kPa pressure, unless otherwise noted.

SOLDERABILITY

parameter	conditions/description	min	typ	max	units
hand soldering	for 3±0.5 seconds	340	350	360	°C
wave soldering	for 10±1 seconds	255	260	265	°C
storage conditions	-5~35°C, 25~80% humidity (avoid high temperature/ humidity, corrosive gases, and direct sunlight) unopened for over 12 months: ensure there is no terminal oxidation, blackening, no moisture absorption, and is solderable				

Downloaded from Arrow.com.

MECHANICAL DRAWING

units: mm
tolerance: ±0.30 mm
unless otherwise specified
PCB thickness: 1.6 mm

DESCRIPTION	MATERIAL	PLATING/COLOR
frame	steel strip	nickel
knob	POM (UL94HB)	black
base	phenolic resin	natural
terminal	brass strip	silver
contact clip	PBS (C5210)	silver
spring	steel wire	natural
steel ball	steel	natural

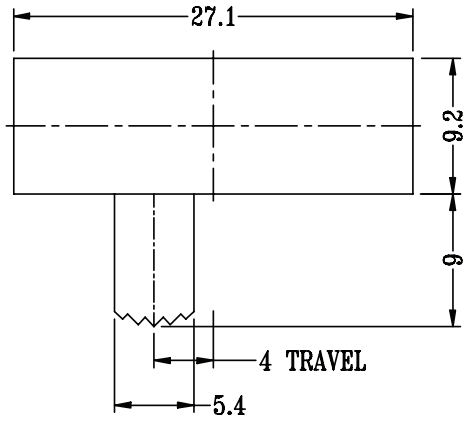

SCHEMATIC
DP3T (SHORTING)

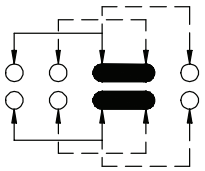

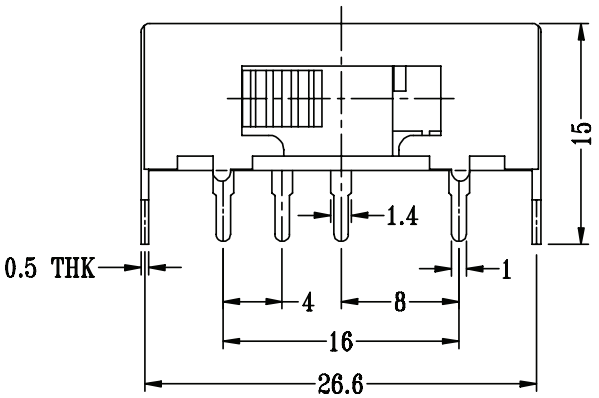

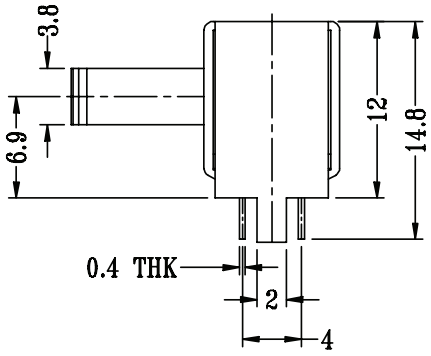

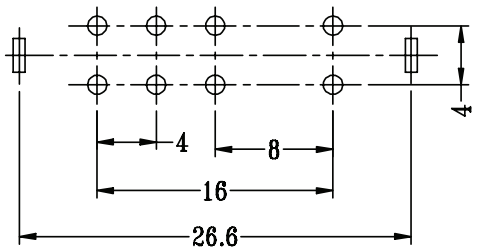

Recommended PCB Layout
Top View

Downloaded from Arrow.com.

REVISION HISTORY

rev.	description	date
1.0	initial release	06/11/2024
1.01	CUI Devices rebranded to Same Sky	09/12/2024

The revision history provided is for informational purposes only and is believed to be accurate.

Same Sky offers a one (1) year limited warranty. Complete warranty information is listed on our website.

Same Sky reserves the right to make changes to the product at any time without notice. Information provided by Same Sky is believed to be accurate and reliable. However, no responsibility is assumed by Same Sky for its use, nor for any infringements of patents or other rights of third parties which may result from its use.

Same Sky products are not authorized or warranted for use as critical components in equipment that requires an extremely high level of reliability. A critical component is any component of a life support device or system whose failure to perform can be reasonably expected to cause the failure of the life support device or system, or to affect its safety or effectiveness.

Downloaded from Arrow.com.