XLamp® CTW0607 LEDs

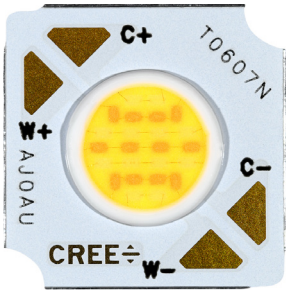

PRODUCT DESCRIPTION

XLamp® CTW LEDs are a family of two-channel CCT-tunable white chip-on-board (COB) LEDs with industry-leading flexibility, lumen density, efficacy and reliability. CCT-tunable COB LEDs simplify the design of all luminaires that use a single directional optic, enabling a wide range of field-configurable color temperatures or an authentic dim-to-warm experience to the end users.

CTW Family LEDs deliver the highest lumen output and the smallest LES in each size category, together with the highest available efficacy in CCT-tunable COB LEDs. The two channels of CTW LEDs are evenly distributed in a checkerboard layout throughout the LES, delivering the best possible color mixing through secondary optics. CTW LES sizes are optimized for compatibility with existing optics designed for existing XLamp COB LED families.

FEATURES

- Available in 6500 K/2700 K, 5000 K/2200 K & 4000 K/1800 K CCT options
- Available in 90-CRI minimum white
- 3-step option
- Binned at 85 °C
- Maximum drive current: 350 mA per channel
- Wide viewing angle: 114°
- RoHS and REACH compliant
- UL® recognized component (E349212)

TABLE OF CONTENTS

Characteristics 2
Operating Limits 2
Flux Characteristics, EasyWhite® Order Codes and Bins 3
Relative Spectral Power Distribution 4
Electrical Characteristics 5
Relative Luminous Flux 6
Relative Chromaticity vs. Current 7
Typical Spatial Distribution 13
Performance Groups - Chromaticity 14
EasyWhite® Kits Plotted on ANSI Standard Chromaticity Regions 14
Bin and Order Code Formats 15
Mechanical Dimensions 16
Thermal Design 17
Notes 18
Packaging 19

Cree LED / 4001 E. Hwy. 54, Suite 2000 / Durham, NC 27713 USA / +1.919.313.5330 / www.cree-led.com

© 2025 Cree LED. The information in this document is subject to change without notice. Cree®, XLamp®, EasyWhite®, the Cree logo, and the Cree LED logo are registered trademarks of Cree LED. Other trademarks, product, and company names are the property of their respective owners and do not imply specific product and/or vendor endorsement, sponsorship or association.

Downloaded from Arrow.com.

CHARACTERISTICS

Characteristics	Unit	Minimum	Typical	Maximum
Viewing angle (FWHM)	degrees		114	
ESD withstand voltage (HBM per Mil-Std-883D)			Class 3A	
DC forward current	mA			350*
Reverse voltage	V			1
Forward voltage (@ 180 mA, 85 °C)	V		36.4	37.4

* Applies to the sum of forward current for both channels. If one channel is driven at 350 mA, then the other channel cannot be driven. If one channel is driven at 200 mA, then the maximum current for the other channel is 150 mA. The Operating Limits section below applies to the sum of forward currents for both channels.

OPERATING LIMITS

The maximum current rating of the CTW0607 LED depends on the case temperature (Tc) when the LED has reached thermal equilibrium under steady-state operation. The graphs shown below assume that the system design employs good thermal management (thermal interface material and heat sink) and may vary when poor thermal management is employed. Either solder pad shown in the Mechanical Dimensions section on page 16 can be used as the Tc measurement point.

Another important factor in good thermal management is the temperature of the Light Emitting Surface (LES). Cree LED recommends a maximum LES temperature of 140 °C to ensure optimal LED lifetime. Please refer to the Thermal Design section on page 17 for more information on LES temperature measurement.

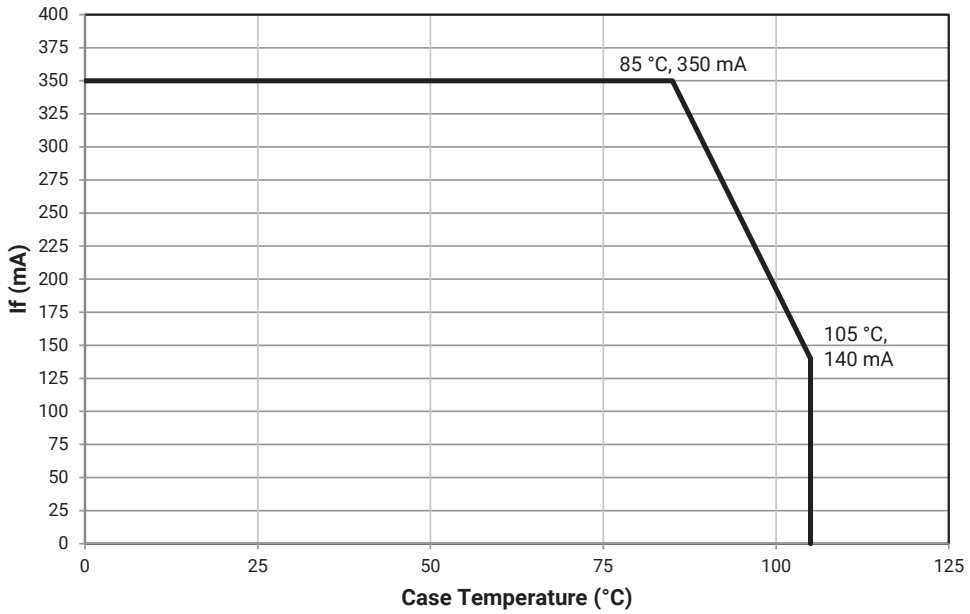

© 2025 Cree LED. The information in this document is subject to change without notice. Cree®, XLamp®, EasyWhite®, the Cree logo, and the Cree LED logo are registered trademarks of Cree LED. Other trademarks, product, and company names are the property of their respective owners and do not imply specific product and/or vendor endorsement, sponsorship or association.

Downloaded from Arrow.com.

FLUX CHARACTERISTICS, EASYWHITE® ORDER CODES AND BINS (I_F = 180 mA, T_J = 85 °C)

The following table provides order codes for XLamp CTW0607 LEDs.

CCT Group	Nominal CCT	CRI Minimum	Minimum Luminous Flux (lm)	Typical Luminous Flux (lm)	3-Step	
					Group	Order Code
6500 K/2700 K	6500 K	90	708	807	AJG	CTW0607-0000-000N0U0AAJG
	2700 K	90	628	716		
5000 K/2200 K	5000 K	90	702	800	DLG	CTW0607-0000-000N0U0ADLG
	2200 K	90	548	625		
4000 K/1800 K	4000 K	90	649	740	FMG	CTW0607-0000-000N0U0AFMG
	1800 K	90	404	460		

Notes

- Cree LED maintains a tolerance of ±7% on flux and power measurements, ±0.005 on chromaticity (CCx, CCy) measurements and a tolerance of ±2 on CRI measurements.
- XLamp CTW0607 LED order codes specify only a minimum flux bin and not a maximum. Cree LED may ship reels in flux bins higher than the minimum specified by the order code without advance notice. Shipments will always adhere to the chromaticity bin restrictions specified by the order code.

© 2025 Cree LED. The information in this document is subject to change without notice. Cree®, XLamp®, EasyWhite®, the Cree logo, and the Cree LED logo are registered trademarks of Cree LED. Other trademarks, product, and company names are the property of their respective owners and do not imply specific product and/or vendor endorsement, sponsorship or association.

Downloaded from Arrow.com.

RELATIVE SPECTRAL POWER DISTRIBUTION

The following graph is the result of a series of pulsed measurements at 180 mA and T_J = 85 °C.

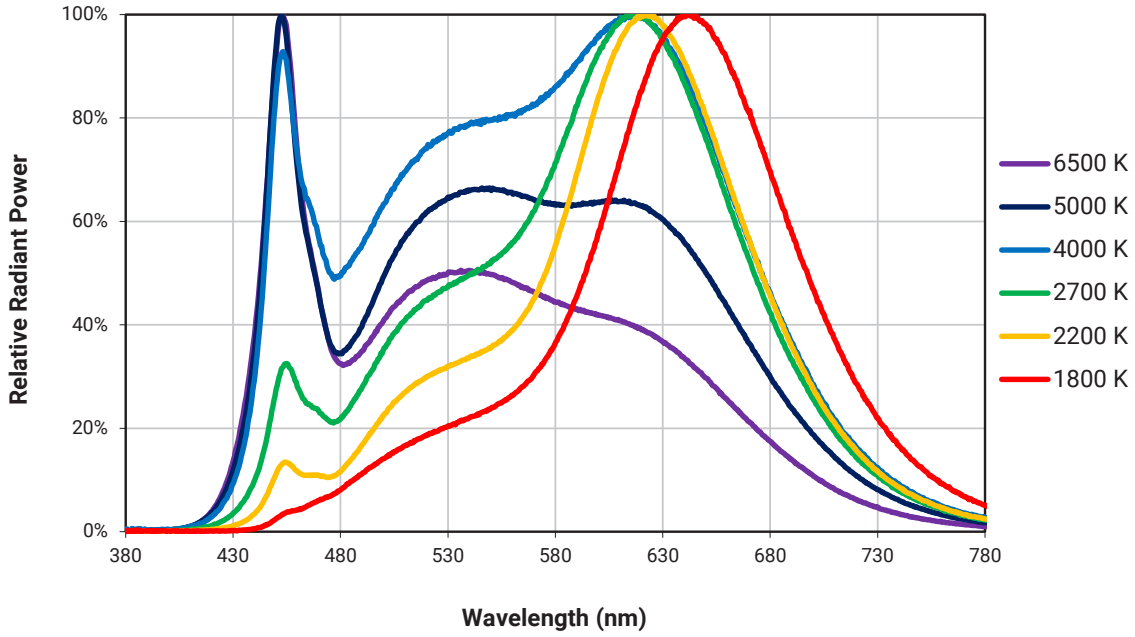

© 2025 Cree LED. The information in this document is subject to change without notice. Cree®, XLamp®, EasyWhite®, the Cree logo, and the Cree LED logo are registered trademarks of Cree LED. Other trademarks, product, and company names are the property of their respective owners and do not imply specific product and/or vendor endorsement, sponsorship or association.

Downloaded from Arrow.com.

ELECTRICAL CHARACTERISTICS

The following graph is the result of a series of steady-state measurements.

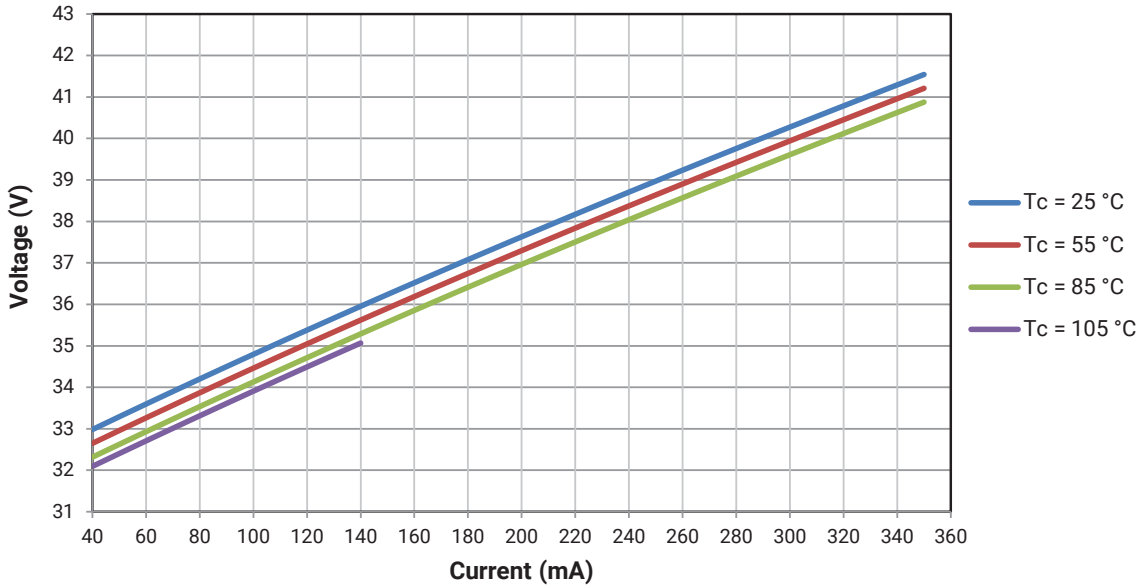

© 2025 Cree LED. The information in this document is subject to change without notice. Cree®, XLamp®, EasyWhite®, the Cree logo, and the Cree LED logo are registered trademarks of Cree LED. Other trademarks, product, and company names are the property of their respective owners and do not imply specific product and/or vendor endorsement, sponsorship or association.

Downloaded from Arrow.com.

RELATIVE LUMINOUS FLUX

The relative luminous flux values provided below are the ratio of:

- Measurements of CTW0607 at steady-state operation at the given conditions, divided by
- Flux measured during binning, which is a pulsed measurement at 180 mA at T_J = 85 °C.

For example, at steady-state operation of Tc = 55 °C, I_F = 280 mA, the relative luminous flux ratio is 150% in the chart below. A CTW0607 LED that measures 807 lm during binning will deliver 1210 lm (807 * 1.5) at steady-state operation of Tc = 55 °C, I_F = 280 mA.

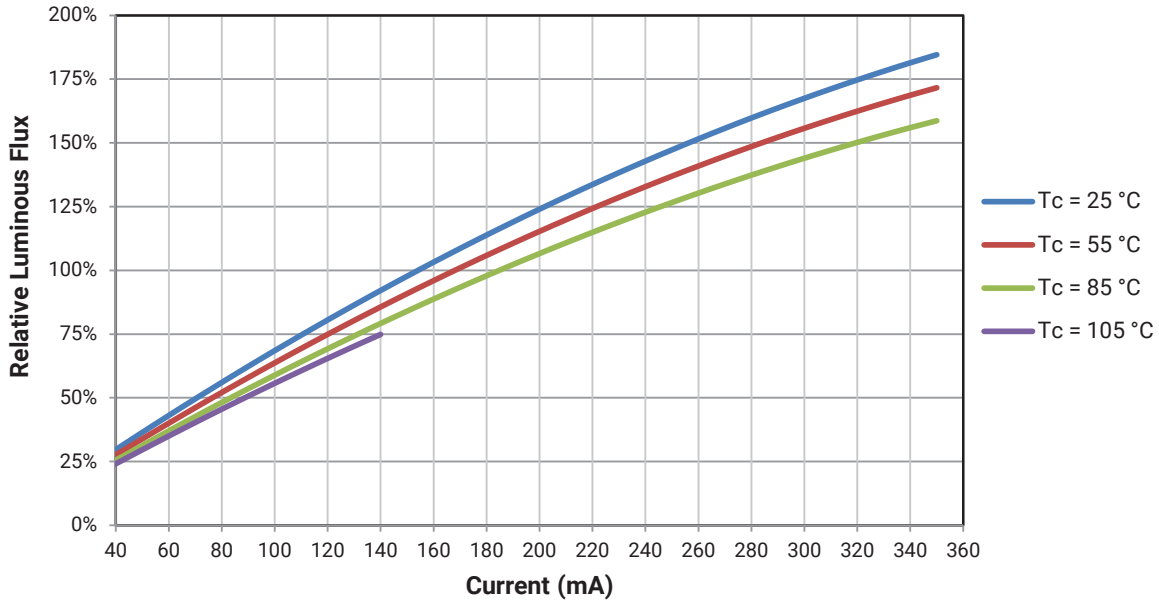

© 2025 Cree LED. The information in this document is subject to change without notice. Cree®, XLamp®, EasyWhite®, the Cree logo, and the Cree LED logo are registered trademarks of Cree LED. Other trademarks, product, and company names are the property of their respective owners and do not imply specific product and/or vendor endorsement, sponsorship or association.

Downloaded from Arrow.com.

RELATIVE CHROMATICITY VS. CURRENT

6500 K, 90 CRI

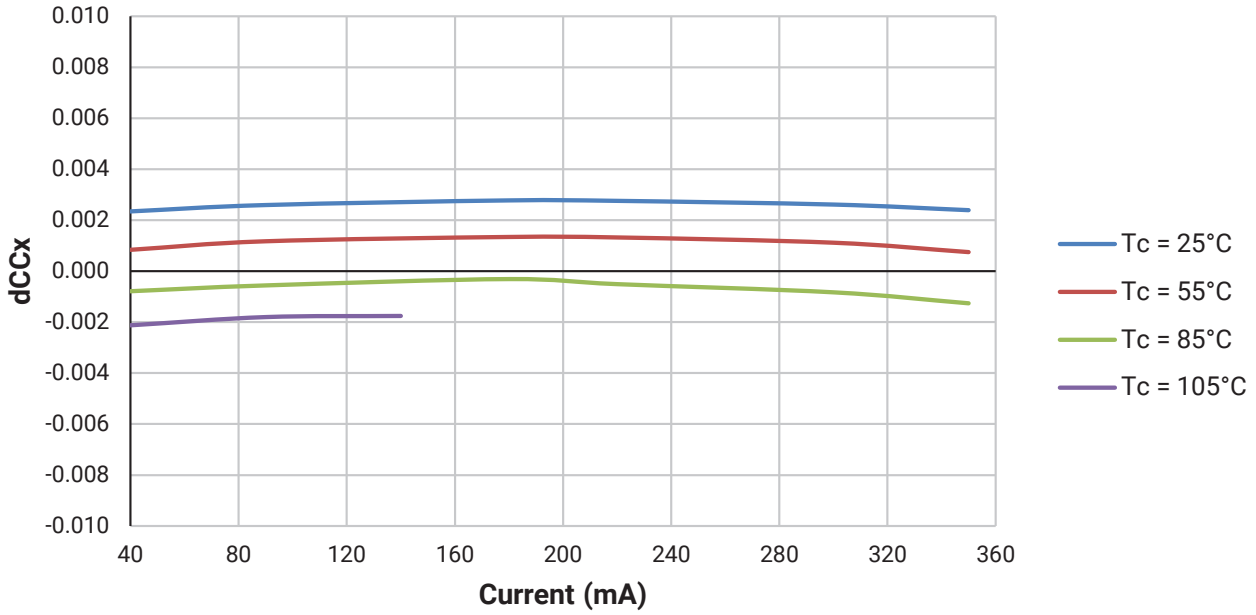

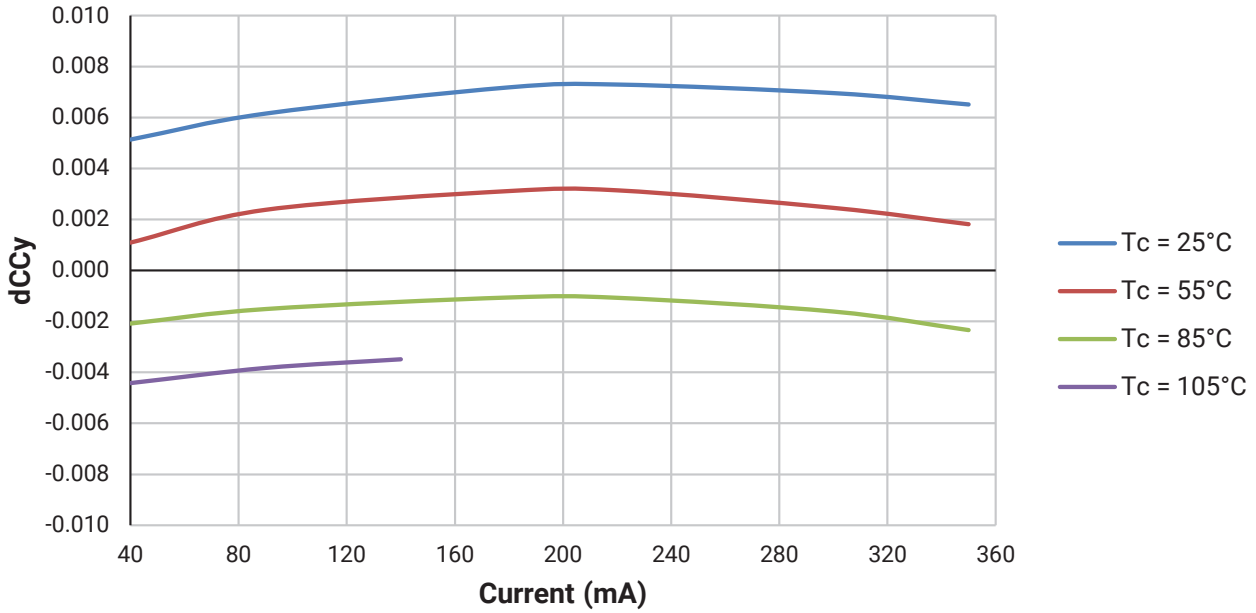

- Relative Chromaticity versus Current and Temperature are shown for reference only. These graphs are not a specification.

© 2025 Cree LED. The information in this document is subject to change without notice. Cree®, XLamp®, EasyWhite®, the Cree logo, and the Cree LED logo are registered trademarks of Cree LED. Other trademarks, product, and company names are the property of their respective owners and do not imply specific product and/or vendor endorsement, sponsorship or association.

Downloaded from Arrow.com.

RELATIVE CHROMATICITY VS. CURRENT - CONTINUED

2700 K, 90 CRI

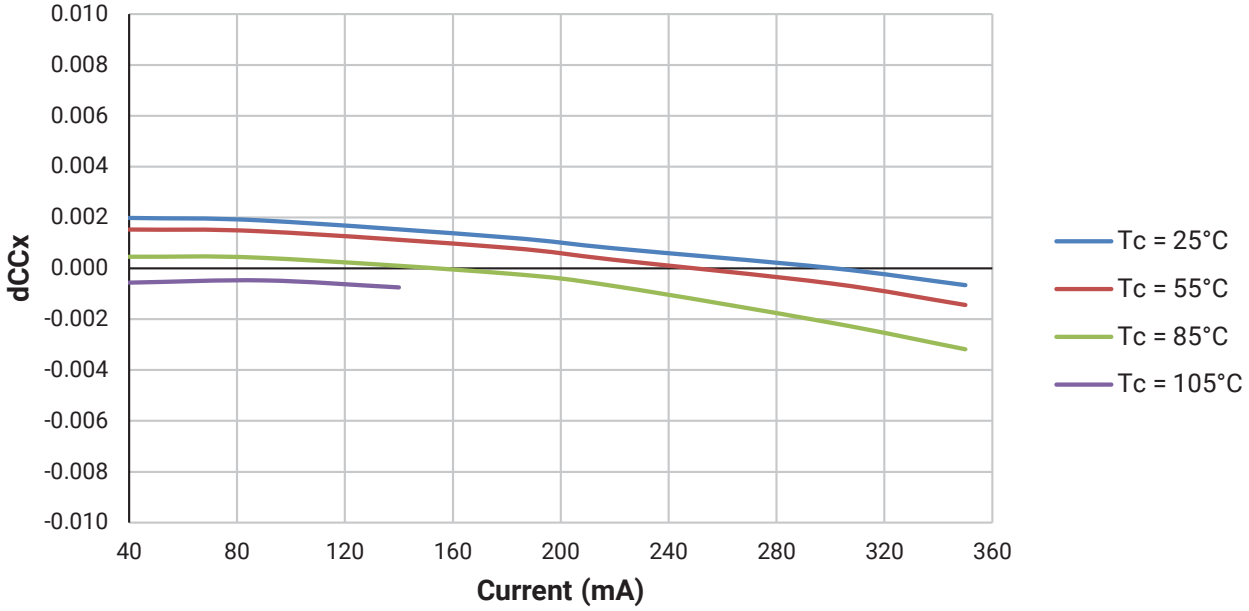

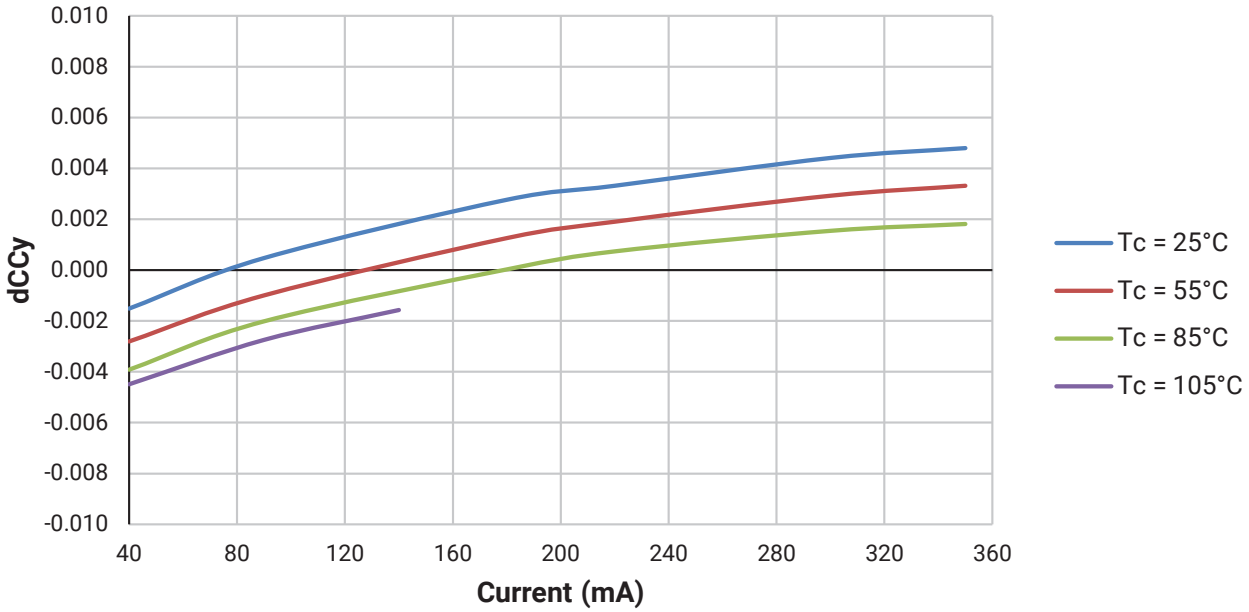

- Relative Chromaticity versus Current and Temperature are shown for reference only. These graphs are not a specification.

© 2025 Cree LED. The information in this document is subject to change without notice. Cree®, XLamp®, EasyWhite®, the Cree logo, and the Cree LED logo are registered trademarks of Cree LED. Other trademarks, product, and company names are the property of their respective owners and do not imply specific product and/or vendor endorsement, sponsorship or association.

Downloaded from Arrow.com.

RELATIVE CHROMATICITY VS. CURRENT - CONTINUED

5000 K, 90 CRI

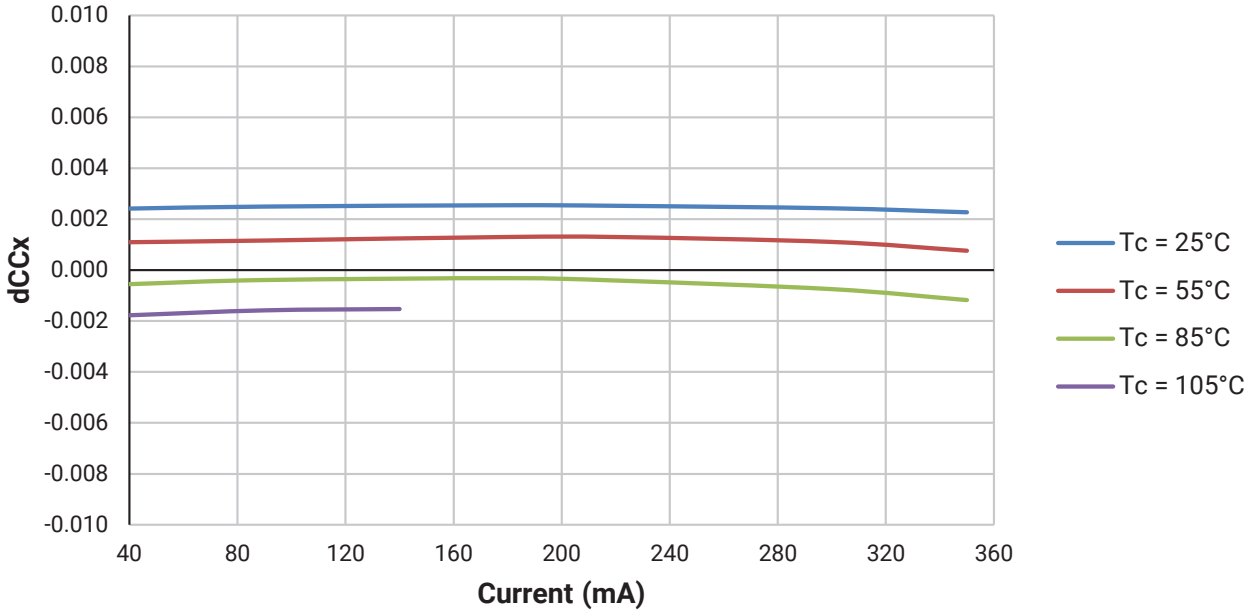

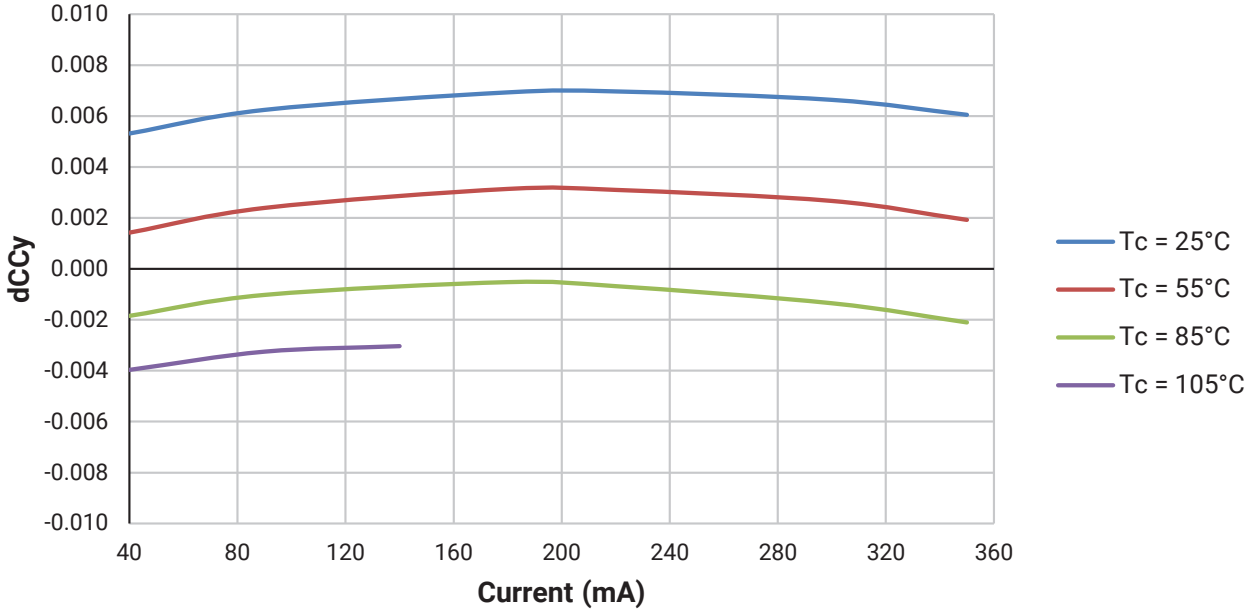

- Relative Chromaticity versus Current and Temperature are shown for reference only. These graphs are not a specification.

© 2025 Cree LED. The information in this document is subject to change without notice. Cree®, XLamp®, EasyWhite®, the Cree logo, and the Cree LED logo are registered trademarks of Cree LED. Other trademarks, product, and company names are the property of their respective owners and do not imply specific product and/or vendor endorsement, sponsorship or association.

Downloaded from Arrow.com.

RELATIVE CHROMATICITY VS. CURRENT - CONTINUED

2200 K, 90 CRI

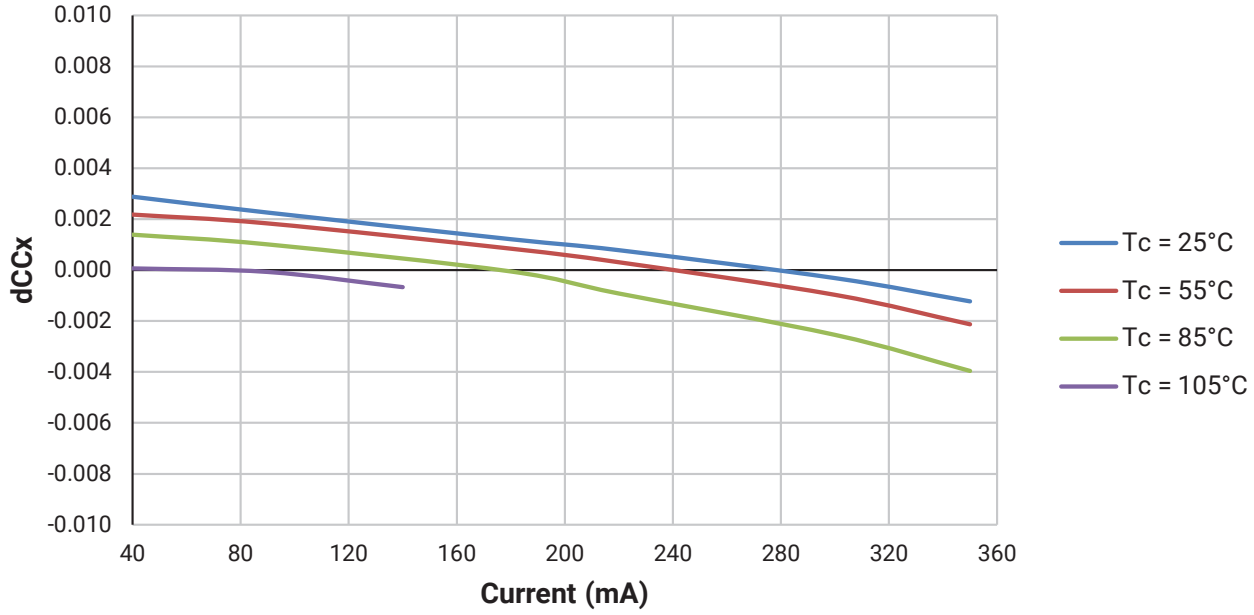

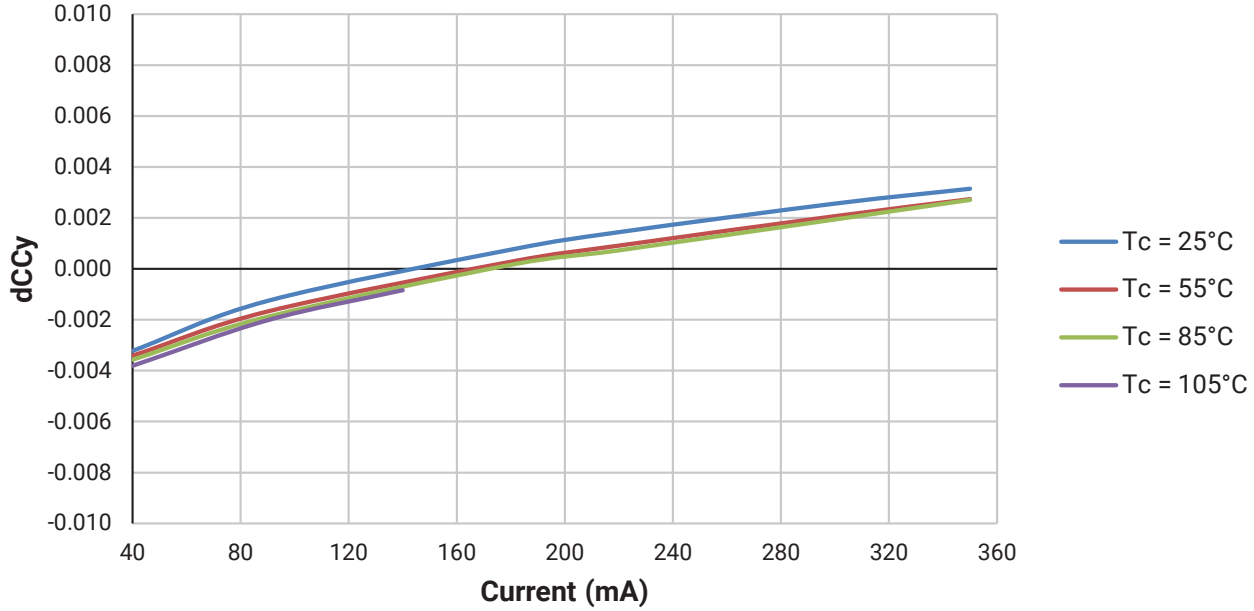

- Relative Chromaticity versus Current and Temperature are shown for reference only. These graphs are not a specification.

© 2025 Cree LED. The information in this document is subject to change without notice. Cree®, XLamp®, EasyWhite®, the Cree logo, and the Cree LED logo are registered trademarks of Cree LED. Other trademarks, product, and company names are the property of their respective owners and do not imply specific product and/or vendor endorsement, sponsorship or association.

Downloaded from Arrow.com.

RELATIVE CHROMATICITY VS. CURRENT - CONTINUED

4000 K, 90 CRI

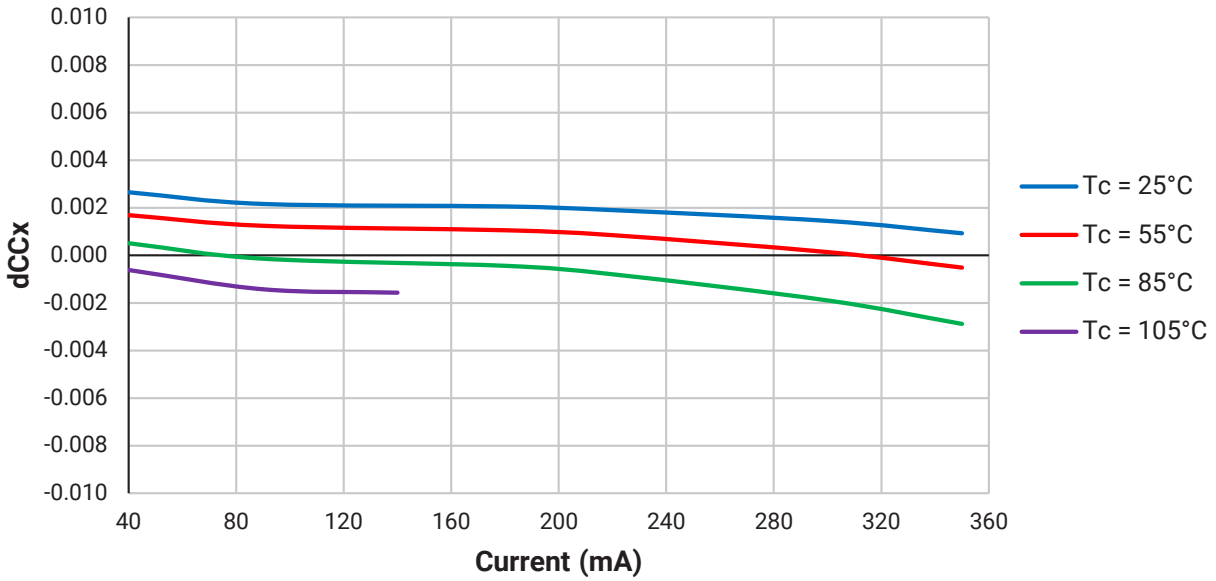

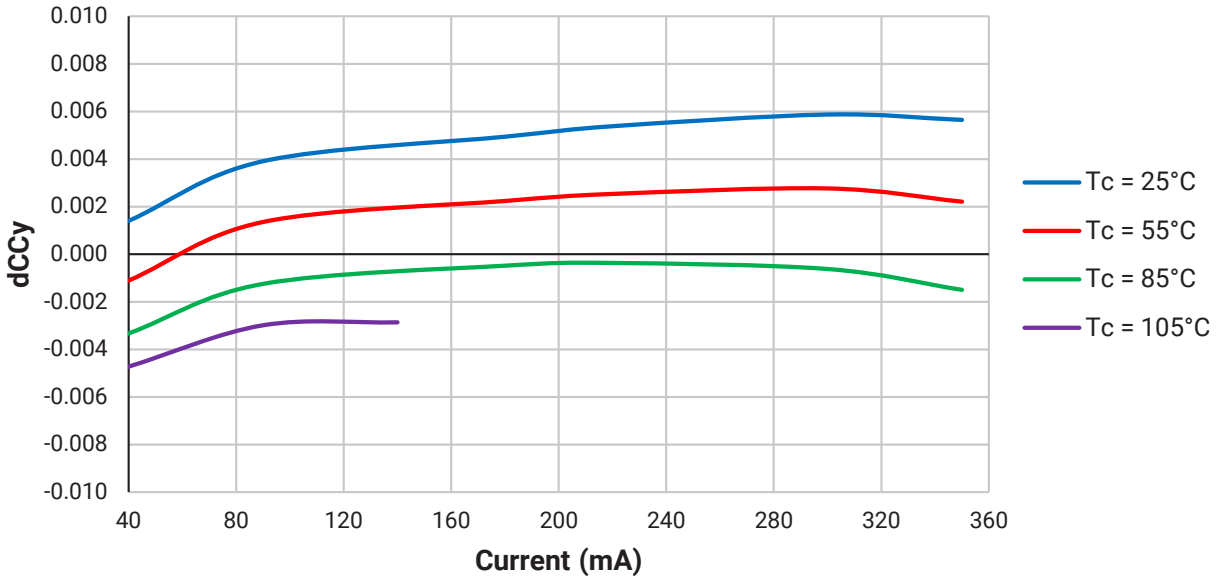

- Relative Chromaticity versus Current and Temperature are shown for reference only. These graphs are not a specification.

© 2025 Cree LED. The information in this document is subject to change without notice. Cree®, XLamp®, EasyWhite®, the Cree logo, and the Cree LED logo are registered trademarks of Cree LED. Other trademarks, product, and company names are the property of their respective owners and do not imply specific product and/or vendor endorsement, sponsorship or association.

Downloaded from Arrow.com.

RELATIVE CHROMATICITY VS. CURRENT - CONTINUED

1800 K, 90 CRI

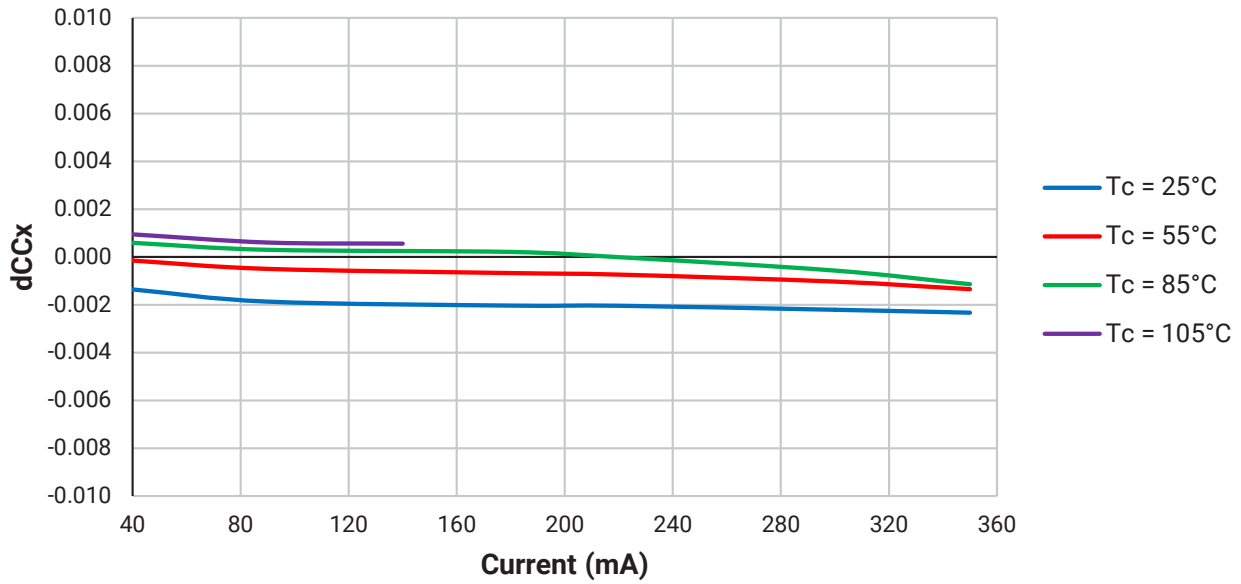

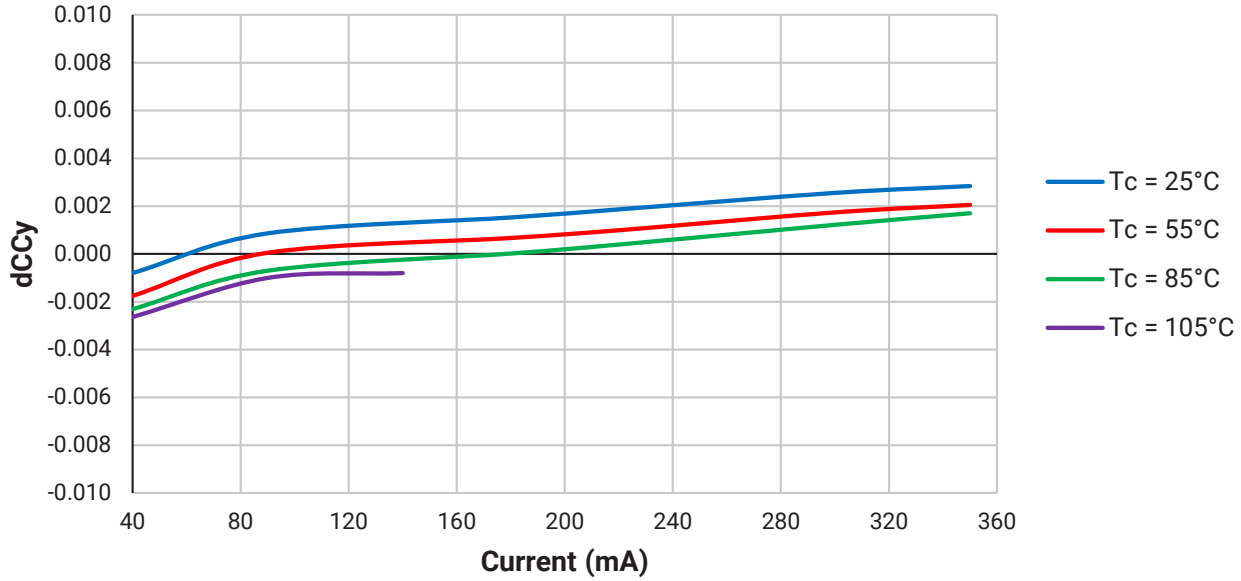

- Relative Chromaticity versus Current and Temperature are shown for reference only. These graphs are not a specification.

© 2025 Cree LED. The information in this document is subject to change without notice. Cree®, XLamp®, EasyWhite®, the Cree logo, and the Cree LED logo are registered trademarks of Cree LED. Other trademarks, product, and company names are the property of their respective owners and do not imply specific product and/or vendor endorsement, sponsorship or association.

Downloaded from Arrow.com.

TYPICAL SPATIAL DISTRIBUTION

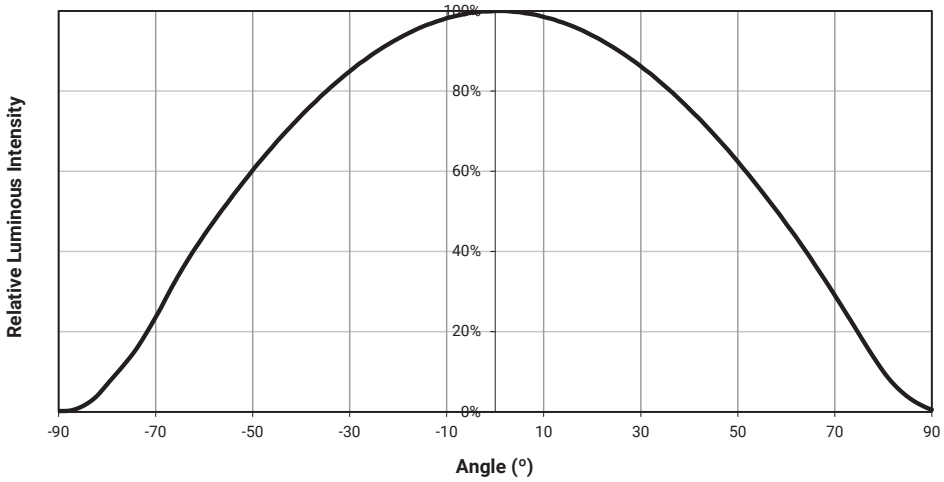

© 2025 Cree LED. The information in this document is subject to change without notice. Cree®, XLamp®, EasyWhite®, the Cree logo, and the Cree LED logo are registered trademarks of Cree LED. Other trademarks, product, and company names are the property of their respective owners and do not imply specific product and/or vendor endorsement, sponsorship or association.

Downloaded from Arrow.com.

PERFORMANCE GROUPS - CHROMATICITY

XLamp CTW0607 LEDs are tested for chromaticity and placed into one of the regions defined by the following bounding coordinates.

EasyWhite® Color Temperatures – 3-Step Ellipse						
Bin Code	CCT	Center Point		Major Axis	Minor Axis	Rotation Angle (°)
		x	y	a	b	
AJG	6500 K	0.3123	0.3282	0.00666	0.00330	61.0
	2700 K	0.4577	0.4099	0.00834	0.00420	48.5
DLG	5000 K	0.3447	0.3553	0.00840	0.00312	65.0
	2200 K	0.5066	0.4158	0.00980	0.00480	45.5
FMG	4000 K	0.3818	0.3797	0.00939	0.00402	53.7
	1800 K	0.5492	0.4082	0.00927	0.00410	-40.0

EASYWHITE® KITS PLOTTED ON ANSI STANDARD CHROMATICITY REGIONS

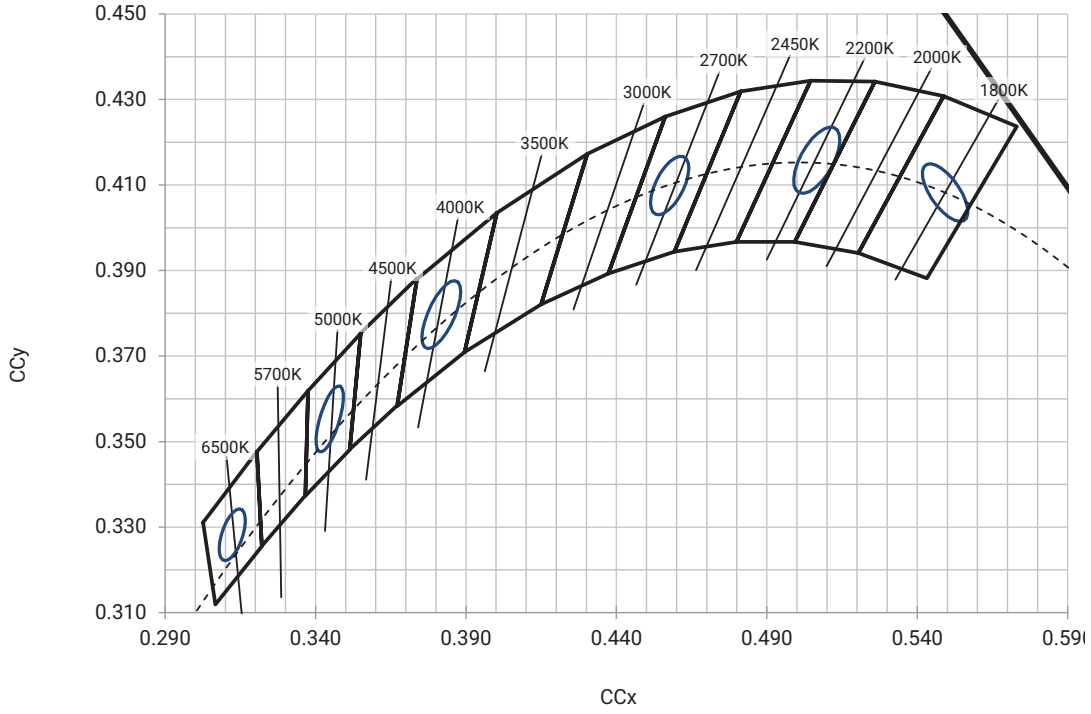

© 2025 Cree LED. The information in this document is subject to change without notice. Cree®, XLamp®, EasyWhite®, the Cree logo, and the Cree LED logo are registered trademarks of Cree LED. Other trademarks, product, and company names are the property of their respective owners and do not imply specific product and/or vendor endorsement, sponsorship or association.

Downloaded from Arrow.com.

BIN AND ORDER CODE FORMATS

Bin codes and order codes are configured as follows:

Order Code

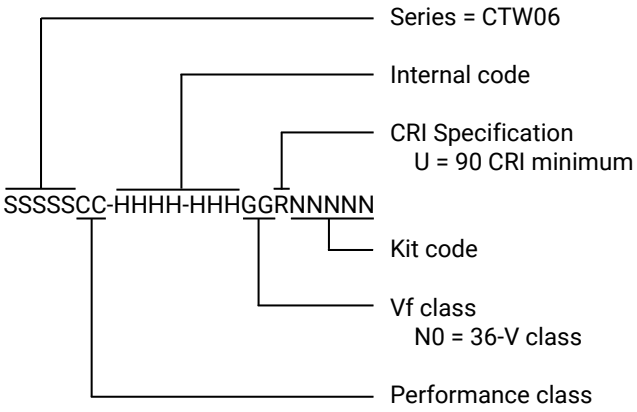

Bin Code

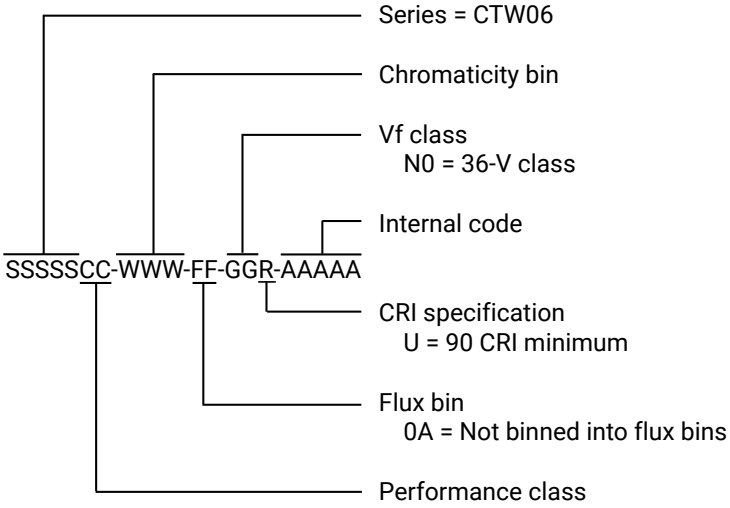

© 2025 Cree LED. The information in this document is subject to change without notice. Cree®, XLamp®, EasyWhite®, the Cree logo, and the Cree LED logo are registered trademarks of Cree LED. Other trademarks, product, and company names are the property of their respective owners and do not imply specific product and/or vendor endorsement, sponsorship or association.

Downloaded from Arrow.com.

MECHANICAL DIMENSIONS (T_A = 25 °C)

Dimensions are in mm.

Tolerances unless otherwise specified: ±.13

x° ± 1°

Meaning of LED marking

T0607N = 36-V CTW0607

X1 X2 X3 X4 X5

X1 X2

AJ = 6500 K/2700 K

DL = 5000 K/2200 K

FM = 4000 K/1800 K

X3 X4

0A = Flux code

X5

U = 90CRI

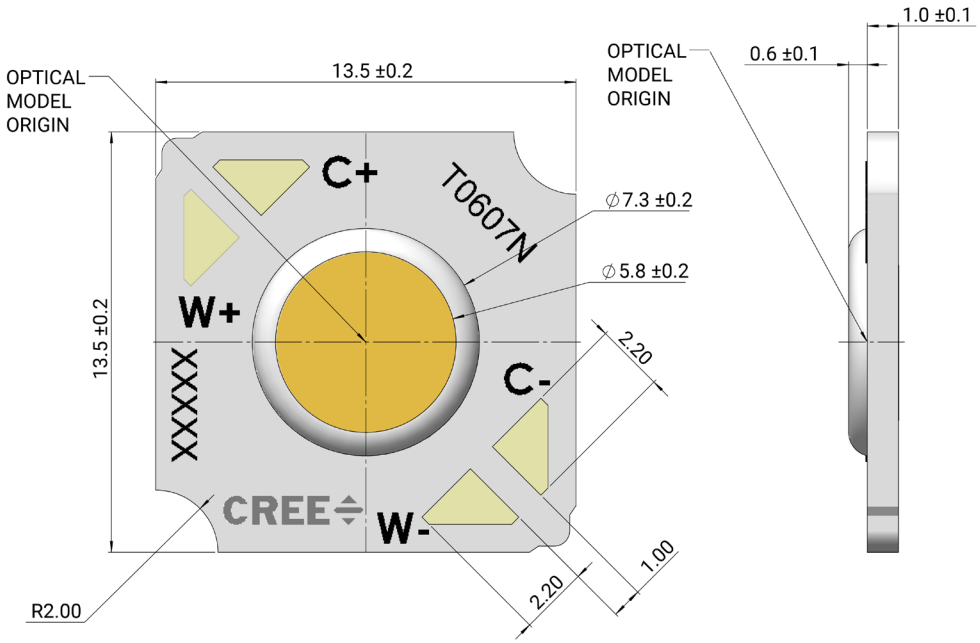

Tc measurement point: either the anode or cathode solder pad

To assist in identifying the LED, CTW0607 LEDs provide a 2D barcode, positioned on the back of the LED, as shown in the following diagram. For a complete description of the bar code format, please refer to the XLamp CTW Family LEDs soldering and handling document.

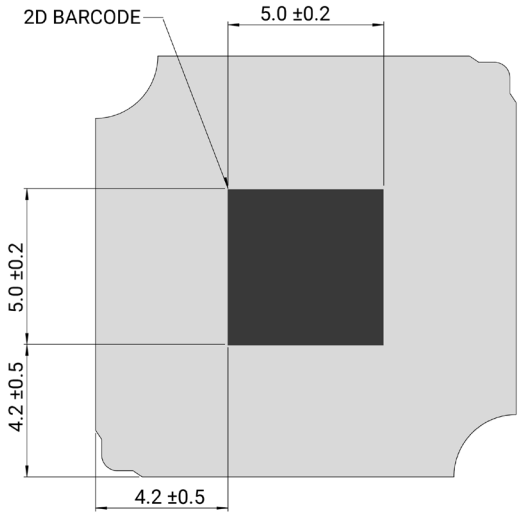

© 2025 Cree LED. The information in this document is subject to change without notice. Cree®, XLamp®, EasyWhite®, the Cree logo, and the Cree LED logo are registered trademarks of Cree LED. Other trademarks, product, and company names are the property of their respective owners and do not imply specific product and/or vendor endorsement, sponsorship or association.

Downloaded from Arrow.com.

THERMAL DESIGN

The CTW family of LED arrays can include over a hundred different LED die inside one package, and thus over a hundred different junction temperatures (T_J). Cree LED has intentionally removed junction-temperature-based operating limits and replaced the commonplace maximum T_J calculations with maximum ratings based on forward current (I_F) and case temperature (Tc). No additional calculations are required to ensure the CTW LED is being operated within its designed limits. LES temperature measurement provides additional verification of good thermal design. Please refer to page 2 for the Operating Limits specification.

There is no need to calculate for T_J inside the package, as the thermal management design process, specifically from solder point (T_{SP}) to ambient (T_a), remains identical to any other LED component. For more information on thermal management of XLamp LEDs, please refer to the Thermal Management application note. For CTW soldering recommendations and more information on thermal interface materials (TIM), LES temperature measurement, and connection methods, please refer to the XLamp CTW Family LEDs soldering and handling document.

To keep the CTW0607 LED at or below the maximum rated Tc, the case to ambient temperature thermal resistance (R_c-a) must be at or below the maximum R_c-a value shown on the following graph, depending on the operating environment. The y-axis in the graph is a base 10 logarithmic scale.

As the figure at right shows, the R_c-a value is the sum of the thermal resistance of the TIM (R_tim) plus the thermal resistance of the heat sink (R_hs).

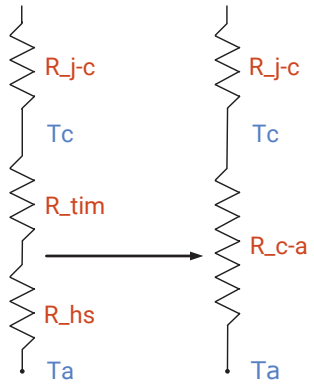

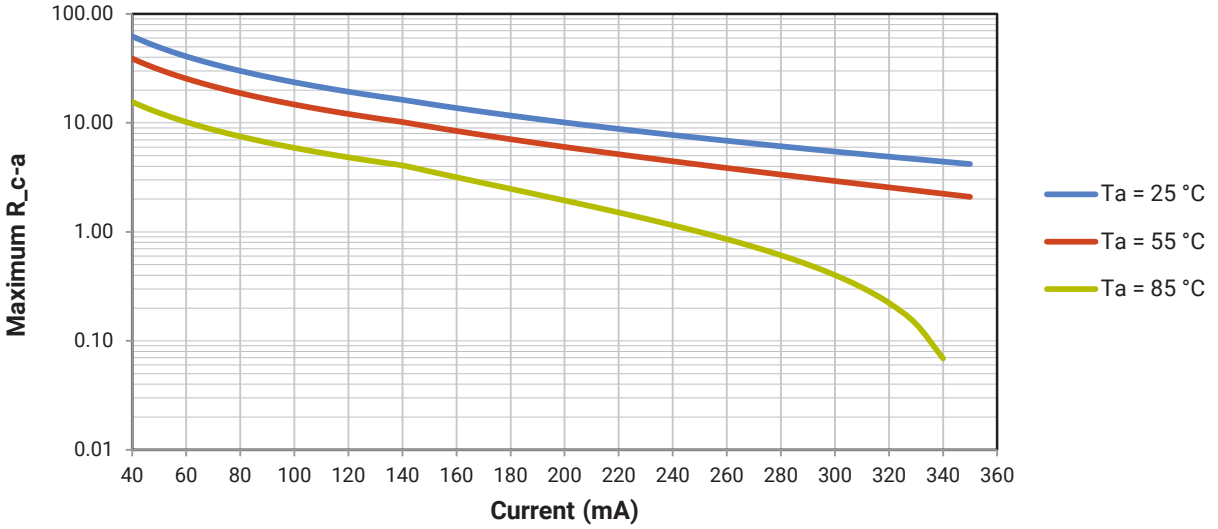

© 2025 Cree LED. The information in this document is subject to change without notice. Cree®, XLamp®, EasyWhite®, the Cree logo, and the Cree LED logo are registered trademarks of Cree LED. Other trademarks, product, and company names are the property of their respective owners and do not imply specific product and/or vendor endorsement, sponsorship or association.

Downloaded from Arrow.com.

NOTES

Measurements

The luminous flux, radiant power, chromaticity, forward voltage and CRI measurements in this document are binning specifications only and solely represent product measurements as of the date of shipment. These measurements will change over time based on a number of factors that are not within Cree LED's control and are not intended or provided as operational specifications for the products. Calculated values are provided for informational purposes only and are not intended or provided as specifications.

Pre-Release Qualification Testing

Please read the LED Reliability Overview for details of the qualification process Cree LED applies to ensure long-term reliability for XLamp LEDs and details of Cree LED's pre-release qualification testing for XLamp LEDs. Cree LED did not perform Room Temperature Operating Life (RTOL) testing on the CTW0607 LED.

Lumen Maintenance

Cree LED now uses standardized IES LM-80-08 and TM-21-11 methods for collecting long-term data and extrapolating LED lumen maintenance. For information on the specific LM-80 data sets available for this LED, refer to the public LM-80 results document.

Please read the Long-Term Lumen Maintenance application note for more details on Cree LED's lumen maintenance testing and forecasting. Please read the Thermal Management application note for details on how thermal design, ambient temperature, and drive current affect the LED junction temperature.

RoHS Compliance

The levels of RoHS restricted materials in this product are below the maximum concentration values (also referred to as the threshold limits) permitted for such substances, or are used in an exempted application, in accordance with EU Directive 2011/65/EC (RoHS2), as implemented January 2, 2013. RoHS Declarations for this product can be obtained from your Cree LED representative or from the Product Ecology section of the Cree LED website.

REACH Compliance

REACH substances of very high concern (SVHCs) information is available for this product. Since the European Chemical Agency (ECHA) has published notice of their intent to frequently revise the SVHC listing for the foreseeable future, please contact a Cree LED representative to insure you get the most up-to-date REACH SVHC Declaration. REACH banned substance information (REACH Article 67) is also available upon request.

UL® Recognized Component

This product meets the requirements to be considered a UL Recognized Component with Level 4 enclosure consideration. The LED package or a portion thereof has been investigated as a fire and electrical enclosure per ANSI/UL 8750.

Vision Advisory

WARNING: Do not look at an exposed lamp in operation. Eye injury can result. For more information about LEDs and eye safety, please refer to the LED Eye Safety application note.

© 2025 Cree LED. The information in this document is subject to change without notice. Cree®, XLamp®, EasyWhite®, the Cree logo, and the Cree LED logo are registered trademarks of Cree LED. Other trademarks, product, and company names are the property of their respective owners and do not imply specific product and/or vendor endorsement, sponsorship or association.

Downloaded from Arrow.com.

PACKAGING

CTW0607 LEDs are packaged in trays of 80. Five trays are sealed in an anti-static bag and placed inside an inner box, for a total of 400 LEDs per box. Each box contains LEDs from the same performance bin. Eight boxes are placed inside a carton, for a total of 3,200 LEDs per carton.

Dimensions are in mm.
Tolerances: ± 0.5 mm

Load Tray

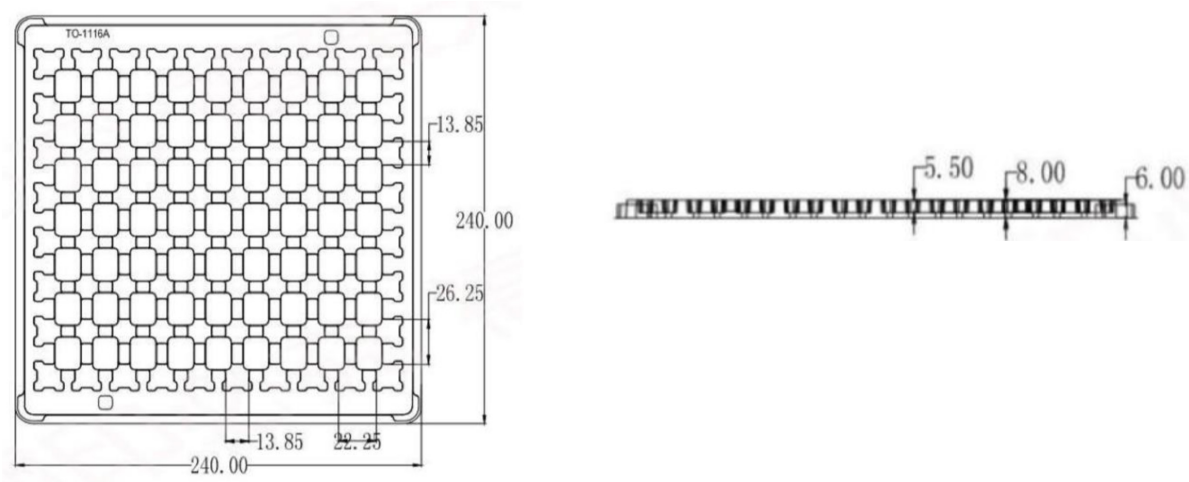

Upper Tray

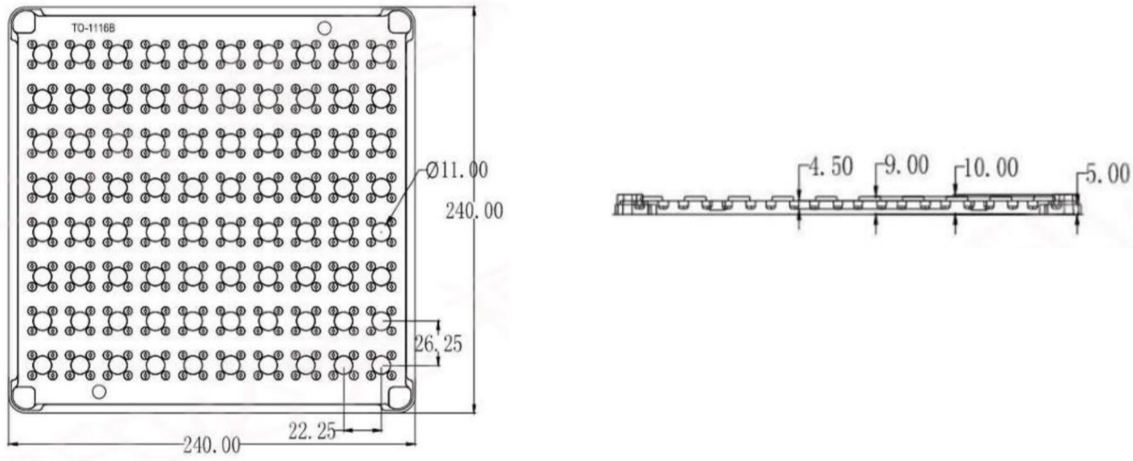

© 2025 Cree LED. The information in this document is subject to change without notice. Cree®, XLamp®, EasyWhite®, the Cree logo, and the Cree LED logo are registered trademarks of Cree LED. Other trademarks, product, and company names are the property of their respective owners and do not imply specific product and/or vendor endorsement, sponsorship or association.

Downloaded from Arrow.com.

PACKAGING - CONTINUED

CTW0607 LEDs are packaged in trays of 80. Five trays are sealed in an anti-static bag and placed inside an inner box, for a total of 400 LEDs per box. Each box contains LEDs from the same performance bin. Eight boxes are placed inside a carton, for a total of 3,200 LEDs per carton.

Dimensions are in mm.
Tolerances: ± 3 mm

Inner Box

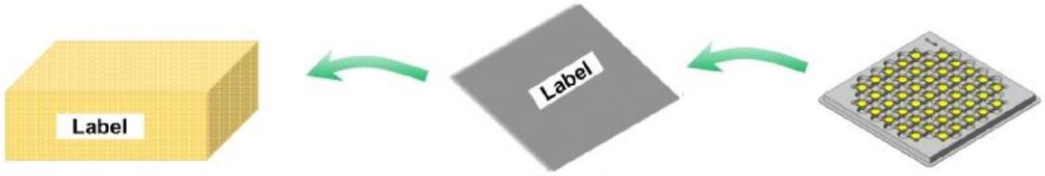

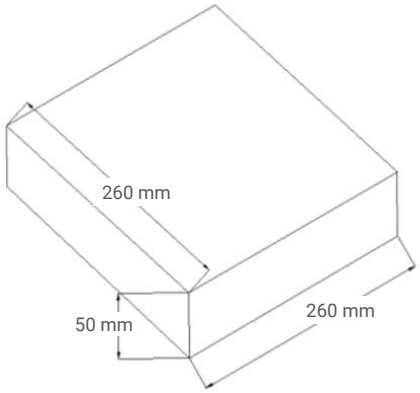

Outer Carton

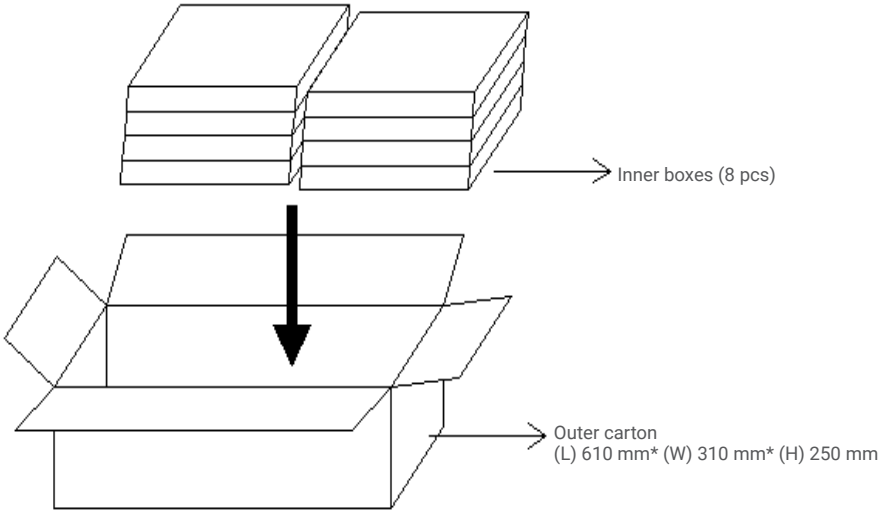

© 2025 Cree LED. The information in this document is subject to change without notice. Cree®, XLamp®, EasyWhite®, the Cree logo, and the Cree LED logo are registered trademarks of Cree LED. Other trademarks, product, and company names are the property of their respective owners and do not imply specific product and/or vendor endorsement, sponsorship or association.

Downloaded from Arrow.com.